CITROËN

REPAIR MANUAL No. MAN 008131

CUSTOMER SERVICES
AFTER-SALES TECHNICAL DEPARTMENT

NOVEMBER 1979

Supplement : No. 1 .....
No. 2 .....
No. 3 .....

ALL VD VEHICLES

MECHANICAL COMPONENTS
ELECTRICAL SYSTEM

CAPITAL 965.860.000 F
C.C.P. PARIS 121 - 54

SIEGE SOCIAL : 117 A 167, QUAI ANDRE-CITROËN 75747 PARIS CEDEX 15
TELEPHONE : (1) 578.61.61 - TELEGRAMME ET TELEX : 270817 CITROËN PARIS

R.C. PARIS B 64.205019
SIRET 642050 199/000 1(

November 1983

Supplement No. 2 (••) to Repair Manual MAN 008131 or MAN 108131

All VD Vehicles

IMPORTANT:

Each sheet in this supplement should:

- either supersede the corresponding one in your Manual, if there is one,
- or be added to your Manual, if there is no corresponding sheet.

Operation VD1. 454-0 supersedes Operation VD. 454-0

FREE SUBSCRIPTION TO ADDITIVE AND CORRECTIVE SHEETS
- to microcatalogues and replacement parts catalogues,
- to repair manuals -

Buying a document does not automatically imply the registration on the subscribers lists (even if the document had been included in a systematic distribution).

To benefit from the subscription, the application form (below) must be filled in immediately on receipt of the document, and sent to the address mentioned on this form.

SUBSIDIARIES :

The Branches and Import Dealers of the Citroën Network are the only ones that are entitled to benefit from it.

The corrective sheets of the documents they have sold must be distributed by themselves to the users.

WORDING OF THE SUBSCRIPTION APPLICATION

SUBSCRIBER NUMBER :

Each member of the Citroën Network has been attributed a subscriber number which he should write down on the application form.
This number is printed on the label of each envelope containing the technical bulletins.

CATEGORIES : 3 Branch - 6 = Import Dealer

QUANTITY :

If several copies of the same document have been received, only one application form should be filled in, by indicating the number of copies.



Code Mvt :

D 5 0 ~~b~~
1 4

N° bordereau :

5 11

Factory use only

APPLICATION FORM for SUBSCRIPTION to ADDITIVE and CORRECTIVE SHEETS

TO BE FILLED IN BY THE USER

Date .....

REFERENCE DOCUMENT (one per form) : **MAN 008131**

QUANTITY : .....
(of the same docum.)

SUBSCRIBER N° LC

CATEGORY :

NAME or trade name : .....

TOWN : .....

COUNTRY : .....

Please forward this form to the following address : CITROEN
P.R. Informatique Abonnements
B.P. 306
92302 LEVALLOIS-PERRET CEDEX
FRANCE

HOW TO USE THE MANUAL *

The Repair Manual for VD1 and VD2 vehicles consists of two volumes :

1 volume dealing with MECHANICAL and ELECTRICAL operations
ref. MAN 008131 for VD1 and VD2 vehicles

1 volume dealing with BODYWORK operations
ref. MAN 008132 for VD1 and VD2 vehicles

These volumes are presented bound in a light-brown Fibrex binder with a « MULTO » type mechanism to facilitate the insertion of supplements or the extraction of a particular operation required by the workshop.

COMPOSITION

a) « MECHANICAL COMPONENTS - ELECTRICAL SYSTEM » volume :

This volume has been divided into four sections. The interpolated index sheets separating them are numbered from I to IV.

I : CHARACTERISTICS - ADJUSTMENTS - CHECKS
II : REMOVAL AND FITTING
III : RECONDITIONING
IV : ELECTRICAL SYSTEM

A list of all the operations appearing in this volume has been inserted at its beginning.

Each section includes :

- a list of the operations appearing in the section,
- the operations, inserted in numerical sequence *(green coloured lists separate the operation groups : VD1/VD2 - VD1 - VD2).*

b) « BODYWORK » volume :

This volume includes :

- a list of all the operations appearing in the volume. It has been placed at its beginning,
- the operations inserted in numerical sequence.

The list of all the tools mentioned in the operations and the manufacturing drawings for special tools which are not sold but are intended to be manufactured by the workshop itself (« MR » tools) can be found at the end of each volume.

* *Manual intended for LHD vehicles*

OPERATIONS

The sequence of operations has been devised in order to obtain the best standard of work in the shortest possible time.

The numbering of the operations is made up as follows :

a) the code letter for the vehicle :

- « VD » for operations relating to VD1 and VD2 vehicles,
- « VD1 »for operations relating to vehicles fitted with a two-cylinder engine,
- « VD2 » for operations relating to vehicles fitted with a four-cylinder engine,

b) a number made up of three figures denoting the unit or its component

c) a figure code designating the type of repair :

- the figures 0 0 0 indicate the characteristics of the vehicle,
- the figures 0 0 indicate the characteristics of the unit,
- the figure 0 indicates checks and adjustments,
- the figures 1, 4, 7 indicate removal and fitting,
- the figures 2, 5, 8 indicate dismantling or reassembly and,
- the figures 3, 6, 9 indicate reconditioning.

TOOLING

Special tooling is denoted in the next by a number followed by the letter T.
Additional tools of local manufacture are indicated in the next by a number preceded by the index MR; manufacturing drawings for these tools appear at the end of the particular volume; preceding the interpolated sheet entitled « Technical Bulletins ».

TIGHTENING TORQUES

Torques are expressed in :

- decanewton metres (da Nm) the legal unit measuring torque

9.81 Nm = 1 m.kg = 0.981 da Nm

The numbers corresponding to the torque are « rounded off » i.e. :

1 da Nm = 1 m.kg

IMPORTANT : When a tightening torque figure is followed by the words « torque wrench » the operation must without fail be carried out with a torque wrench.

IMPORTANT : WITHOUT FAIL after each operation or group of operations, there is a chapter headed « TIGHTENING TORQUES » : the screws nuts or studs which are **underlined** indicate that they are of a special grade, « SECURITY HARDWARE ».
When refitting it is ESSENTIAL, to use this type of HARDWARE TO THE EXCLUSION OF ANY OTHER.
The tightening torques shown on drawings and preceded by an asterisk, also correspond to « SECURITY HARDWARE ».

ADVISORY SERVICE

For technical information concerning these vehicles, please contact :

The Service Department
Citroën Cars Ltd.
Mill St.,
Slough Berks - GB - Tel. Slough 23808
or
DEPARTEMENT TECHNIQUE APRES-VENTE
ASSISTANCE TECHNIQUE
92000 NANTERRE - FRANCE Tél : 725-97-10

LIST OF OPERATIONS IN SECTION I

Operation number	DESCRIPTION
	CHARACTERISTICS - ADJUSTMENTS - CHECKS
	VD - All Types
VD. 00	Jacking and towing points
VD. 453-0	Bleeding the brakes
	VD 1
VD1. 000	General characteristics
VD1. 100-00	Characteristics and special features of the engine
VD1. 112-0	Adjusting the rockers and checking the valve timing
VD1. 142-00	Characteristics of the carburettor
VD1. 142-0	Adjusting the carburettor
VD1. 210-00	Characteristics of the ignition system
VD1. 210-0	Checking the ignition
VD1. 220-0	Checking the oil pressure - Checking the crankcase vacuum
VD1. 312-00	Characteristics and special features of the clutch
VD1. 330-00	Characteristics and special features of the gearbox
VD1. 372-00	Characteristics and special features of the drive shafts
VD1. 410-00	Characteristics and special features of the front axle
VD1. 410-0	Checking and adjusting the front axle
VD1. 420-00	Characteristics and special features of the rear axle
VD1. 420-0	Checking and adjusting the rear axle
VD1. 430-00	Characteristics and special features of the suspension
VD1. 440-00	Characteristics and special features of the steering
VD1. 450-00	Characteristics and special features of the braking system
VD1. 454-0	Adjusting the handbrake
	VD 2
VD2. 000	General characteristics
VD2. 100-00	Characteristics and special features of the engine
VD2. 112-0	Adjusting the rockers
VD2. 142-00	Characteristics of the carburettor
VD2. 142-0	Adjusting the carburettor
VD2. 210-00	Characteristics of the ignition system
♦ VD2. 210-00 a	Characteristics of transistorised ignition
VD2. 210-0	Checking and adjusting the ignition
♦ VD2. 210-0 a	Checking the transistorised ignition
VD2. 220-0	Checking the oil pressure

LIST OF OPERATIONS IN SECTION I (cont.)

Operation number	DESCRIPTION
	CHARACTERISTICS - ADJUSTMENTS - CHECKS
	VD 2
VD2. 312-00	Characteristics and special features of the clutch
VD2. 330-00	Characteristics and special features of the gearbox
VD2. 330-0	Checking and adjusting the gearbox control
VD2. 372-00	Characteristics and special features of the drive shafts
VD2. 410-00	Characteristics and special features of the front axle
VD2. 410-0	Checking and adjusting the front axle
VD2. 420-00	Characteristics and special features of the rear axle
VD2. 420-0	Checking and adjusting the rear axle
VD2. 430-00	Characteristics and special features of the suspension
VD2. 440-00	Characteristics and special features of the steering
VD2. 450-00	Characteristics and special features of the braking system
VD2. 454-0	Adjusting the handbrake - Adjusting the brake limiter

CHARACTERISTICS - ADJUSTMENTS - CHECKS

Operations in common : VD1/VD2

VD. 00 - Jacking and towing points

VD. 453-0 - Bleeding the brakes

CHARACTERISTICS - ADJUSTMENTS - CHECKS

Operations in common : VD1/VD2

VD. 00 - Jacking and towing points

VD. 453-0 - Bleeding the brakes

VD. 454-0 - Adjusting the handbrake

LIST OF VD1 OPERATIONS IN SECTION I

Operation number	DESCRIPTION
	CHARACTERISTICS - ADJUSTMENTS - CHECKS
VD1. 000	General characteristics
VD1. 100-00	Characteristics and special features of the engine
VD1. 112-0	Adjusting the rockers and checking the valve timing
VD1. 142-00	Characteristics of the carburettor
VD1. 142-0	Adjusting the carburettor
VD1. 210-00	Characteristics of the ignition system
VD1. 220-0	Checking the oil pressure - Checking the crankcase vacuum
VD1. 312-00	Characteristics and special features of the clutch
VD1. 330-00	Characteristics and special features of the gearbox
VD1. 372-00	Characteristics and special features of the drive shafts
VD1. 410-00	Characteristics and special features of the front axle
VD1. 410-0	Checking and adjusting the front axle
VD1. 420-00	Characteristics and special features of the rear axle
VD1. 420-0	Checking and adjusting the rear axle
VD1. 430-00	Characteristics and special features of the suspension
VD1. 440-00	Characteristics and special features of the steering
VD1. 450-00	Characteristics and special features of the braking system
VD1. 454-0	Adjusting the handbrake

OPERATION
VD. 00

JACKING AND TOWING POINTS

JACKING POINTS

A and **A 1** : Jack support under body for car jack (wheel changing)

B and **B 1** : Jacking points under body.

TOWING POINTS

C : Front towing points

D : Rear towing points

78-713

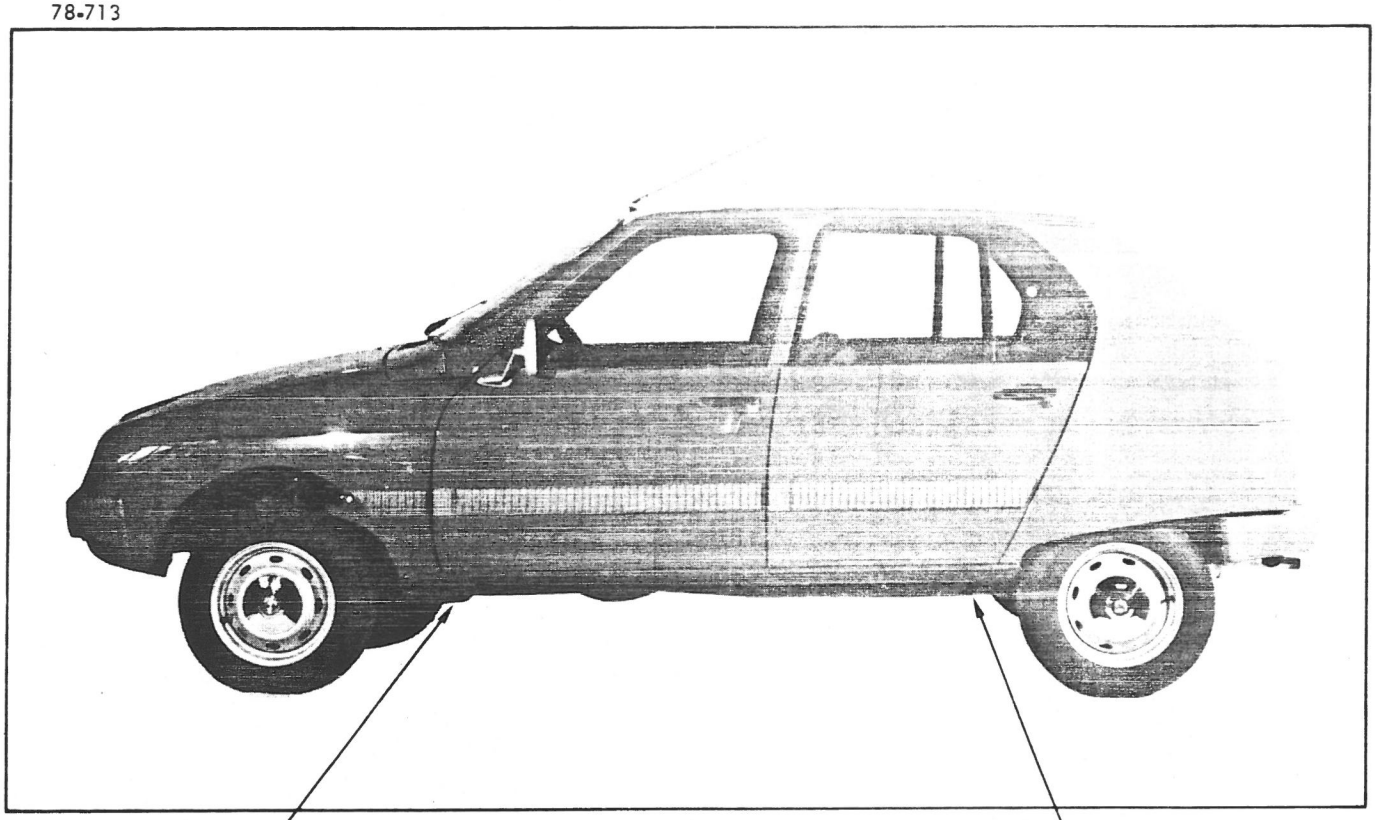

78-206

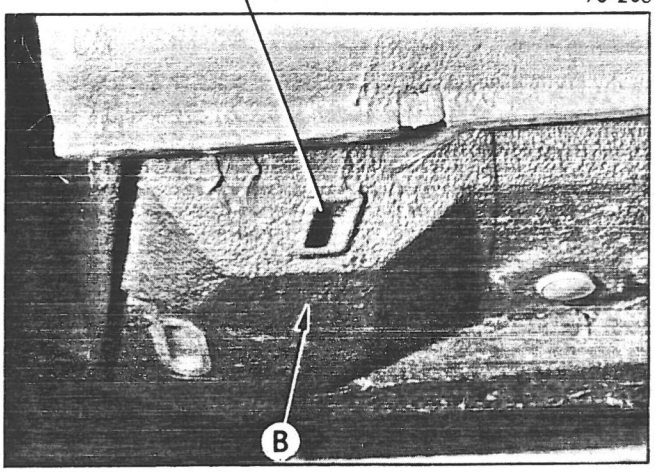

78-207

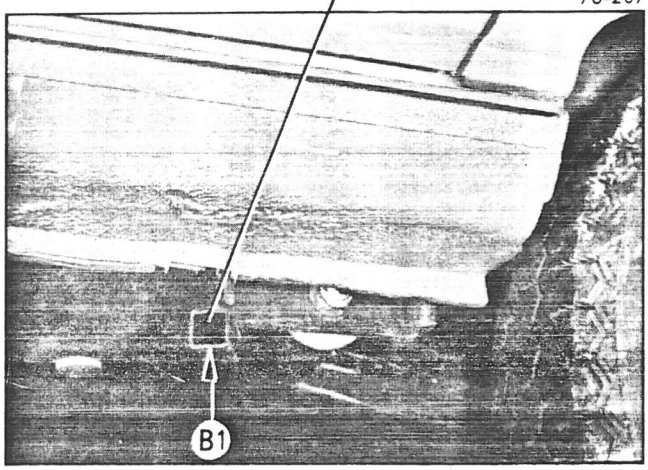

78-60

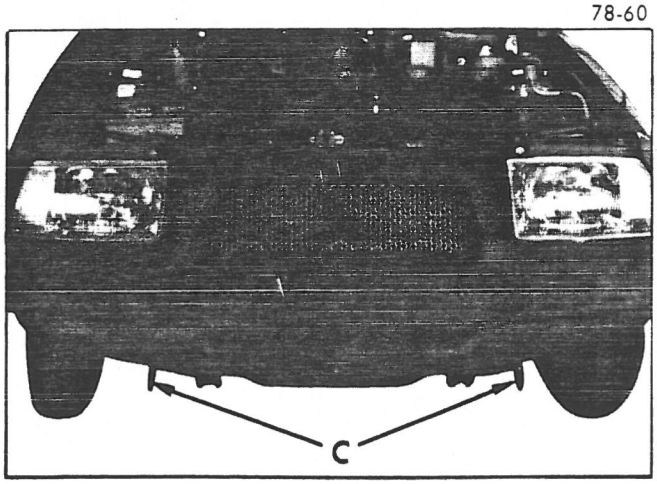

78-723

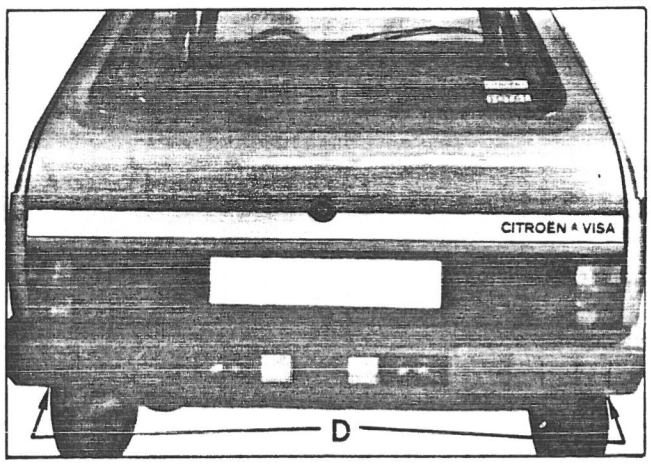

OPERATION
VD. 453-0

BLEEDING THE BRAKES

BLEEDING THE BRAKING SYSTEM

During the bleeding operations keep the fluid level up in the reservoir. Use synthetic fluid in conformity with NFR 126 40 S or V - or SAE J 1703 (e.g. TOTAL SY) Standards.

- Bleed each wheel cylinder, starting from the front of the vehicle :
  Bleed : the front one, RH, and the front one, LH,
  the rear one, RH, and rear one, LH
- Place a transparent tube over each bleed screw with its other end in a clean container.
- Depress the brake pedal.
- Loosen the bleed screw.
- Maintain the brake pedal fully depressed.
- Tighten the bleed screw.
- Gently release the pedal, up to its abutment stop.
- Repeat the procedure until there are no more air bubbles.
- Operate likewise on the other wheels.

Bleeding the brakes can be carried out more easily by using a commercial device (e.g. ARC 50).

OPERATION
VD1. 454-0

ADJUSTING THE HANDBRAKE

ADJUSTING THE HANDBRAKE

- Actuate the hydraulic brake two ot three times by depressing the pedal.

- Bring the handbrake lever to its travel third notch.

- Unscrew the sheath stops (➡) until the rear brakes begin to apply.

- Even the tightening of LH and RH cables.

- Make sure that when the control is in the fifth notch, the rear wheels are completely locked.

- Tighten the sheath stop locknuts.

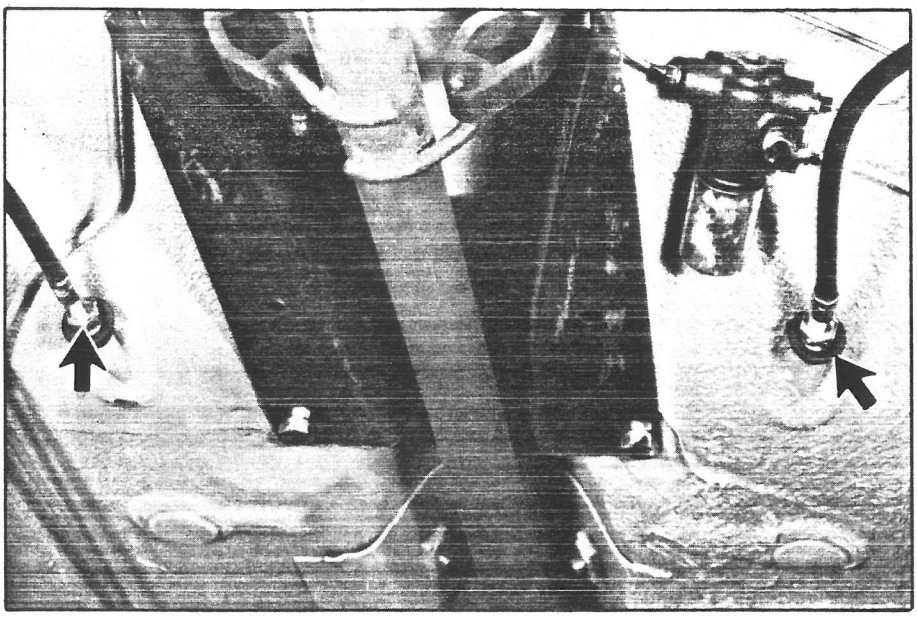

LIST OF VD1 OPERATIONS IN SECTION I

Operation number	DESCRIPTION
	CHARACTERISTICS - ADJUSTMENTS - CHECKS
VD1. 000	General characteristics
VD1. 100-00	Characteristics and special features of the engine
VD1. 112-0	Adjusting the rockers and checking the valve timing
VD1. 142-00	Characteristics of the carburettor
VD1. 142-0	Adjusting the carburettor
VD1. 210-00	Characteristics of the ignition system
VD1. 210-0	Checking the ignition
VD1. 220-0	Checking the oil pressure - Checking the crankcase vacuum
VD1. 312-00	Characteristics and special features of the clutch
VD1. 330-00	Characteristics and special features of the gearbox
VD1. 372-00	Characteristics and special features of the drive shafts
VD1. 410-00	Characteristics and special features of the front axle
VD1. 410-0	Checking and adjusting the front axle
VD1. 420-00	Characteristics and special features of the rear axle
VD1. 420-0	Checking and adjusting the rear axle
VD1. 430-00	Characteristics and special features of the suspension
VD1. 440-00	Characteristics and special features of the steering
VD1. 450-00	Characteristics and special features of the braking system

OPERATION
VD1. 000

GENERAL CHARACTERISTICS

I. GENERAL CHARACTERISTICS

- Official symbol : ..... VD series VA
- Commercial symbol : ..... VISA "Spécial" or "Club"
- Factory symbol (Warranty symbol) : ..... VA
- Introduction date : ..... October 1978
- French fiscal rating : ..... 4 CV
- Number of seats : 4

Wheels and tyres	Front	Rear	Spare
Tyres (with inner tube)	135 SR 13 XZX	135 SR 13 XZX	135 SR 13 XZX
Pressures	1.7 bar (25 psi)	2 bar (29 psi)	2.2 bar (32 psi)

Wheelrims : ..... 4 1/2 B X·13

II. GENERAL DIMENSIONS

Dimensions :

Front track : ..... 1.292 m (4 ft. 2 7/8 in)
Rear track : ..... 1.241 m (4 ft. 1 in)
Wheelbase : ..... 2.430 m (7 ft 11 5/8 in)
Overall length : ..... 3.690 m (12 ft 1 1/4 in)

Front overhang : ..... 0.665 m (2 ft 2 1/8 in)
Rear overhang : ..... 0.595 m (1 ft 11 3/8 in)
Height of vehicle : ..... 1.408 m (4 ft 7 3/8 in) (unladen)
Ground clearance : ..... 0.131 m (5 1/8 in)

Weights :

Kerb weight : ..... 735 kg (1620 lb)
Weight on front axle : ..... 435 kg (959 lb)
Weight on rear axle : ..... 315 kg (694 lb)
Gross Vehicle Weight : ..... 1065 kg (2348 lb)
Max. authorized weight on front axle : ..... 535 kg (1179 lb)
Max. authorized weight on rear axle : ..... 540 kg (1190 lb)

Towing :

Max. trailer nose weight : ..... 40 kg (88 lb)
* Gross Train Weight (including a trailer without brakes, weighing 370 kg (816 lb) 1435 kg (3164 lb)
Gross Train Weight (including a trailer with brakes, wejghing 500 kg (1102 lb) 1565 kg (3450 lb)
Maximum starting gradient *(at Gross Train Weight)* ..... 12% (1 in 8.5)

* **IMPORTANT NOTE : References to trailers without brakes do not apply in U.K.**

III. MISCELLANEOUS INFORMATION

Capacities :

Fuel tank : ..... 40 litres (8.8 Imp. galls)
Engine oil : TOTAL 20 W 50 or TOTAL GOLD 10 W 40 (GB)
TOTAL GTS 15 W 50 (Europe, except G.B., Spain and France)
TOTAL GTS 20 W 50 (Spain), TOTAL GTS 15 W 40 (France)
In very cold climates : TOTAL GTS 10 W 30 (or TOTAL Altigrade GT 10 W 30 in France)

- Sump capacity, after oil change : ..... 3 litres (5.3 Imp. pts)
- Sump capacity, after changing oil and removing cylinder head covers : ..... 3.2 litres (5.6 Imp. pts)
- Sump capacity, after changing oil and filter cartridge : ..... 3.3 litres (5.8 Imp. pts)
- Sump capacity, after changing oil and removing cylinder head covers and filter cartridge : ..... 3.5 litres (6.1 Imp.pts)
- Difference between Min and Max on dipstick : ..... 1 litre (1.75 Imp. pts)

Gearbox oil : TOTAL EXTREME PRESSURE SAE 80 W / 85 W; or TOTAL EP 80 :
- Casing capacity, after draining : ..... 1.4 litres (2.5 Imp. pts)

Usable volume of boot :

- rear seat up : ..... 300 dm3 (10.6 cu ft)
- folded : ..... 694 dm3 (24.5 cu ft.)

V. 80-4

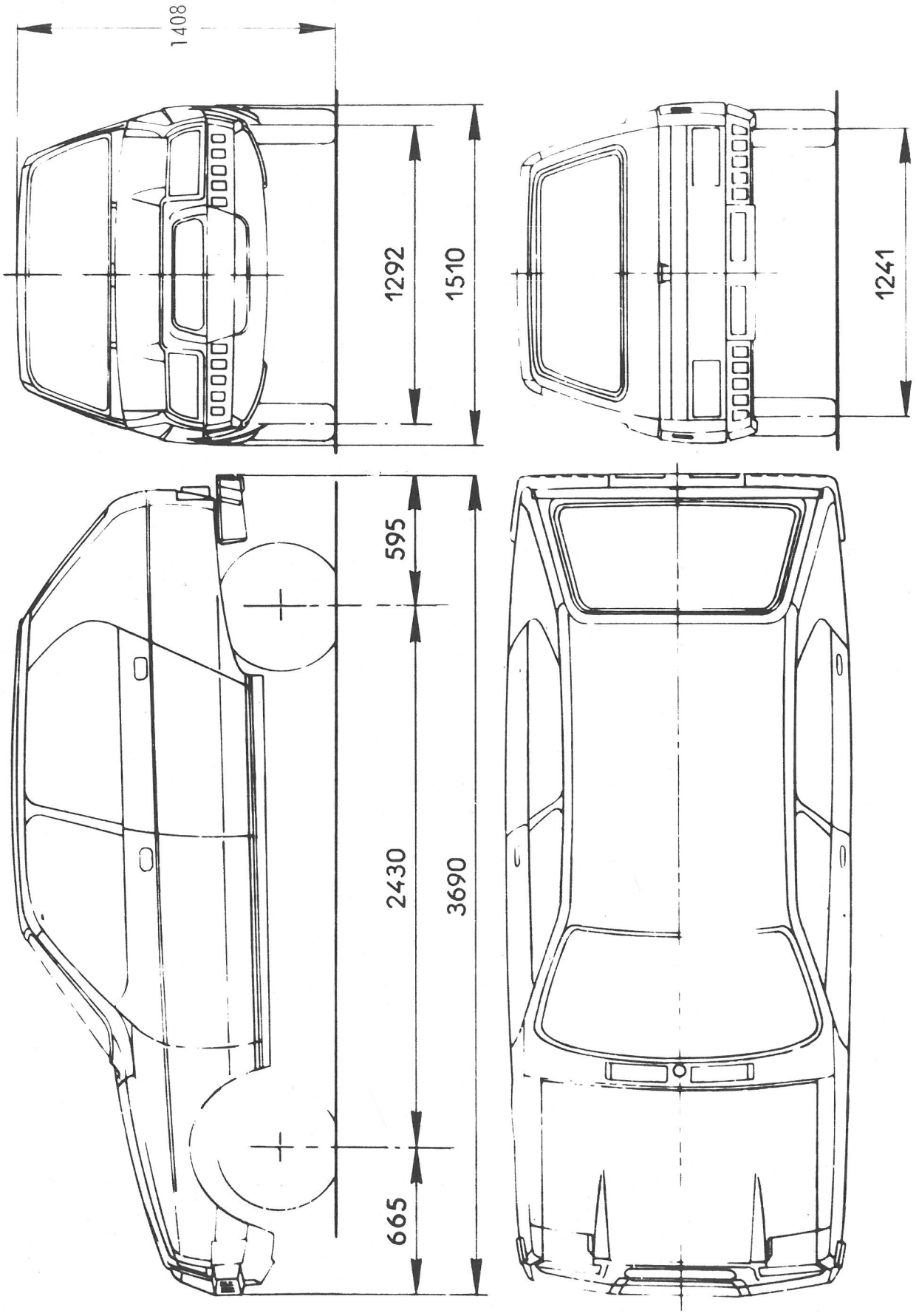

Dimensions in mm

OPERATION
VD1. 100-00

CHARACTERISTICS AND SPECIAL FEATURES OF THE ENGINE

I. GENERAL CHARACTERISTICS

Engine :

- **Type** *(on engine plate)* : ..... V 06/630
- French fiscal rating : ..... 4 CV
- Capacity, cc (cu in) : 652 (39.7)
- Cylinders : 2
- Bore, mm (in) : 77 (3.03)
- Stroke, mm (in) : 70 (2.75)
- Compression ratio : 9-to-1
- Max power : ..... 26.50 Kw or36 bhp (DIN) at 5,500 rpm
- Max torque : ..... 5.3 mkg (DIN) - 38 lb ft at 3,500 rpm

Cooling system : air-cooled

Lubrication : force-feed type, from an "Eaton" type oil pump fitted at camshaft end.

Carburettor :
Make : SOLEX
Type : 26/35 CSIC
Mark : 209

Ignition :

This vehicle is fitted with an electronic ignition device which is made up of the following :

- two proximity detectors,
- a vacuum-sensing transducer,
- a computer,
- a coil.

Static advance : ..... 10° at 850 rpm

Timing :
Camshaft under the crankshaft, with automatic wear take-up system.

Tightening torques :

- Drain plug : ..... 3.5 to 4.5 da Nm (25.5 to 32.5 ft.lb)
- Relief valve : ..... 4.5 da Nm (32.5 ft.lb)
- Fixing screws for oil pump cover : ..... 1.3 to 1.5 da Nm (9.5 to 11 ft.lb)
- Screws for engine front bearing : ..... 1.6 to 1.8 da Nm (11.5 to 13 ft.lb)
- Screws for engine bearings : ..... 3.5 to 4 da Nm (25.5 to 29 ft.lb)
- Screws for flywheel : ..... 8 da Nm (58 ft.lb)

V 10-1

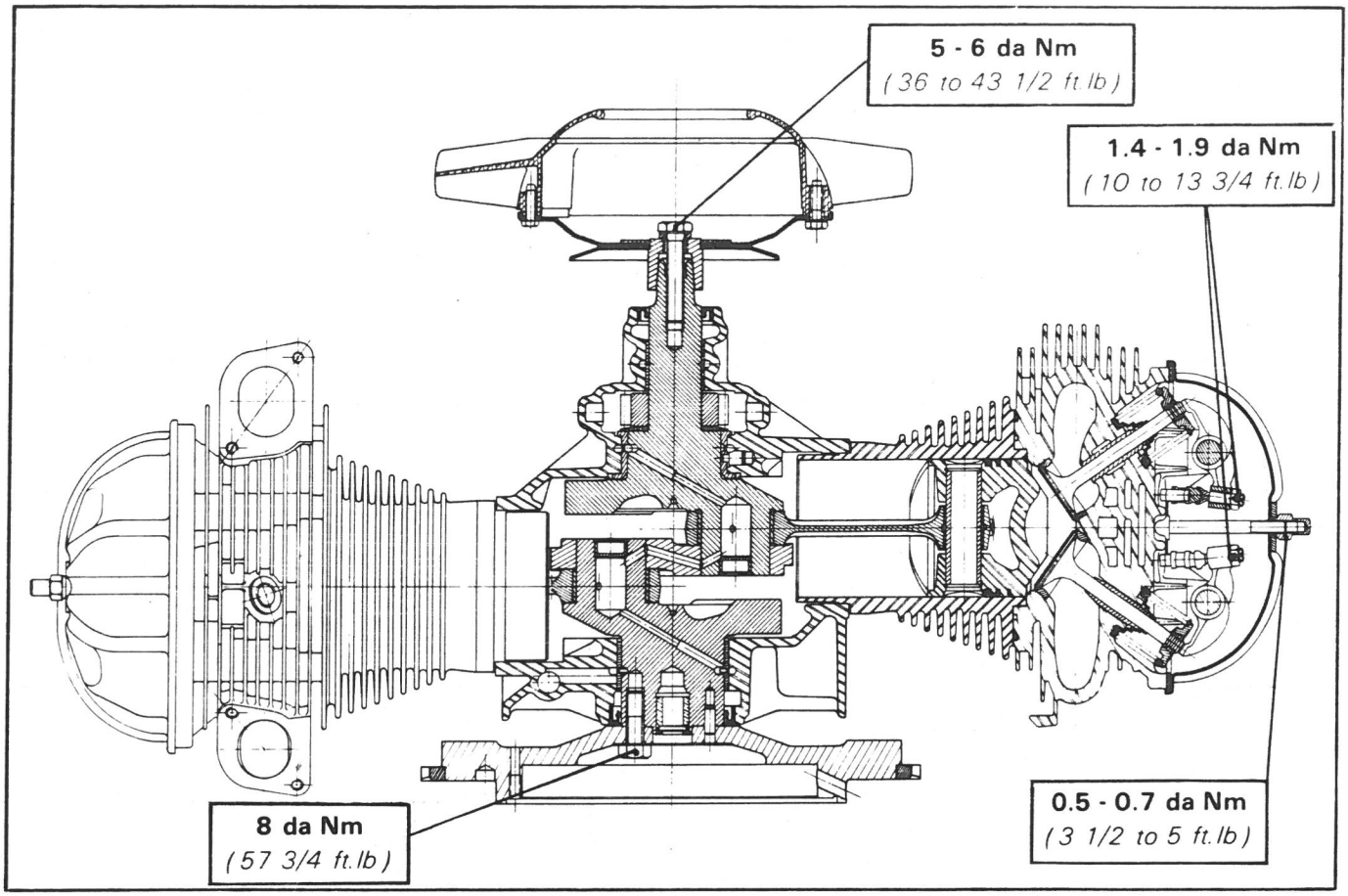
5 - 6 da Nm
(36 to 43 1/2 ft.lb)
1.4 - 1.9 da Nm
(10 to 13 3/4 ft.lb)
8 da Nm
(57 3/4 ft.lb)
0.5 - 0.7 da Nm
(3 1/2 to 5 ft.lb)

V 10-2

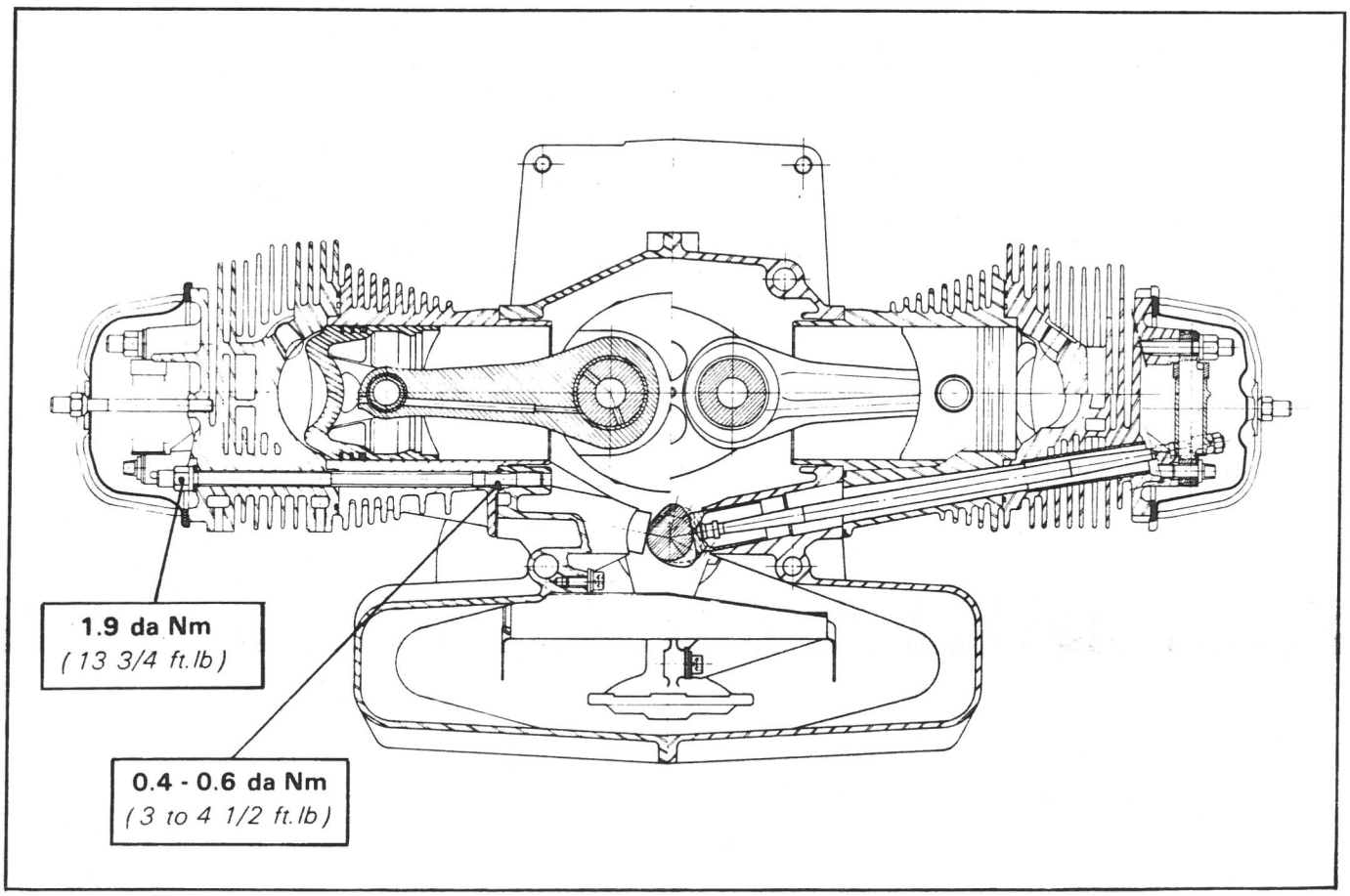
1.9 da Nm
(13 3/4 ft.lb)
0.4 - 0.6 da Nm
(3 to 4 1/2 ft.lb)

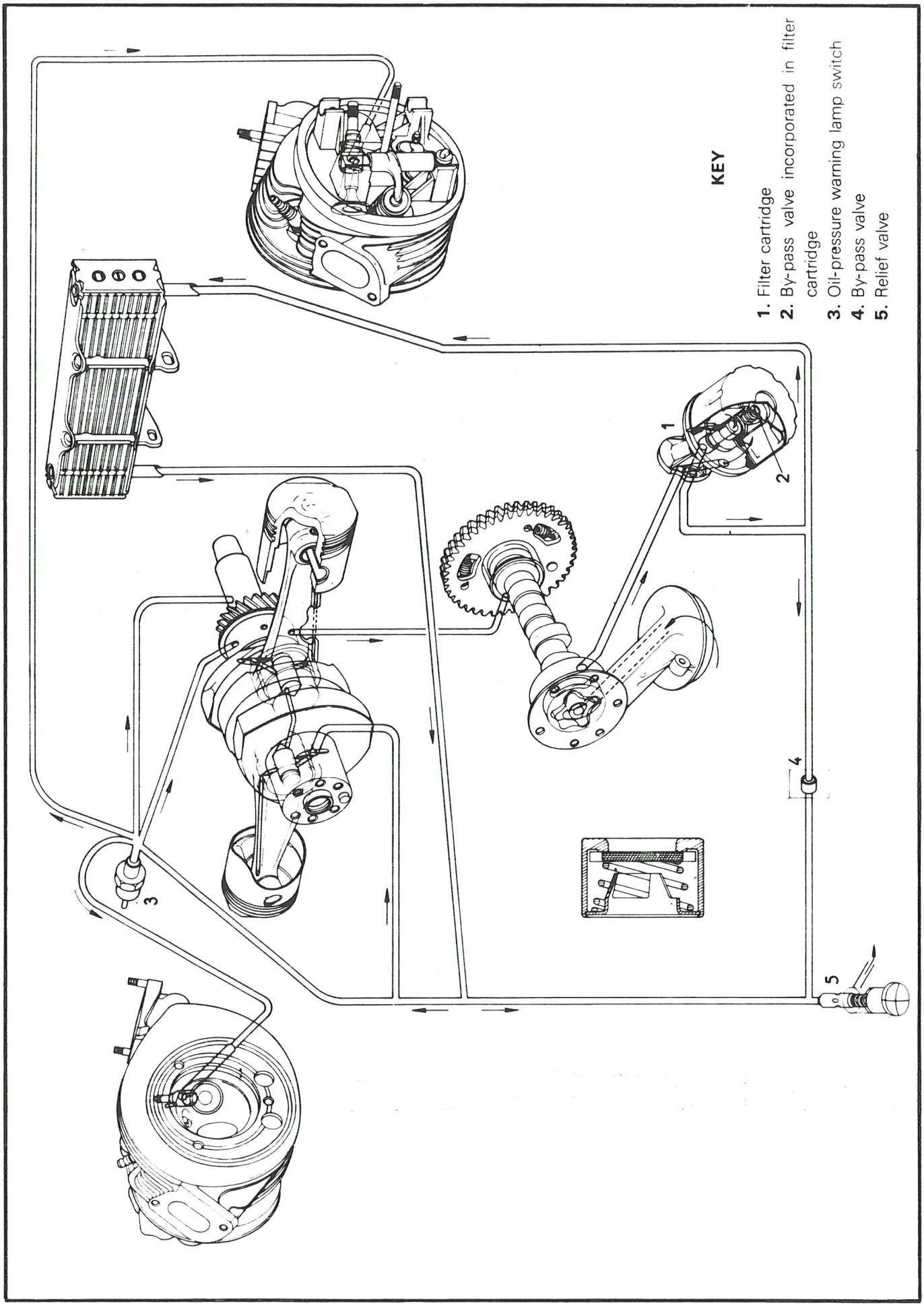
KEY
1. Filter cartridge
2. By-pass valve incorporated in filter cartridge
3. Oil-pressure warning lamp switch
4. By-pass valve
5. Relief valve
1
2
3
4
5

II. DIAGRAM OF THE LUBRICATION SYSTEM

Key : 1. Filter cartridge
2. By-pass valve incorporated in filter cartridge
3. Oil pressure switch
4. Removable by-pass valve incorporated in the L.H. half casing
5. Relief valve (with shoulder at spring end facing the outside)

III SPECIAL FEATURES

Crankcase :
Sealing of joint surface with LOCTITE FORMETANCH
Crankshaft : *(one single type of half bearing bushes)*
Diameter of front crankshaft bearing : ..... $30\ ^{-0.045}_{+0.060}$ mm

Diameter of rear crankshaft bearing : ..... $57.5\ ^{-0}_{+0.015}$ mm

End float *(not adjustable)* : ..... 0.07 to 0.14 mm
Do not interfere with the front and rear journals of the crankshaft.
Connecting rods :
Bore of small-end bushes : ..... $20.085\ ^{-0.011}_{+0.005}$ mm

End float : ..... 0.08 to 0.13 mm
Flywheel :
Maximum lateral run-out of starter ring : ..... 0.3 mm
Correct fitting of starter ring : non machined face of the ring facing the flywheel shouldering
Cylinder : one class of cylinder.
Pistons - Piston rings :
Gudgeon pins of the floating type.
Piston with a mark for correct fitting (arrow) : after fitting the arrow should face timing gear.
Piston rings :
The marking (or manufacturer's mark) must face the crown of the piston.
Cylinder head :
Tightening sequence (cold) : front upper nut - rear upper nut - lower nut
Valves :
TEVES rotating valves.

Valves	Angle (degrees)	Head dia (mm)	Stem dia. (mm)	Length (mm)
Inlet	90°	$39.5\ ^{+0.2}_{0}$	$8\ ^{-0.020}_{-0.035}$	$87.93\ ^{+0.25}_{-0.45}$
Exhaust	90°	35.75	$8.479\ ^{-0}_{-0.015}$	$86.17\ ^{+0.25}_{-0.35}$

Valve springs :

One type of spring.

Length under load (mm)	Load (kg)
31.4 mm	37 ± 2.5
24.15 mm	66 ± 3.5

Seats and guides :

Bore of valve guides :
- Inlet : ..... dia. $8\ ^{+0.004}_{-0.002}$ mm
- Exhaust : ..... dia. $8.5\ ^{-0.017}_{-0.011}$ mm

Width of contact surface :
- Inlet : ..... 1.70 mm max.
- Exhaust : ..... 1.80 mm max.

Maximum out of line of rocker push rods : ..... 0.2 mm max.
Length of push rods : ..... $286.3\ ^{+0.4}_{-1}$ mm

Timing :
Camshaft :
- End float *(not adjustable)* : ..... 0.04 to 0.09 mm

Theoretical setting : *with 1 mm clearance between rockers and valve stems, inlet and exhaust*
- Inlet valve opens, ATDC : ..... 7°
- Inlet valve closes, ABDC : ..... 42°
- Exhaust valve opens, BBDC : ..... 35°
- Exhaust valve closes, BTDC : ..... 6°

Lubrication system :
Grade of oil : ..... TOTAL 20 W/50 or TOTAL GOLD 10 W 40 (G.B.)
TOTAL GTS 15 W 50 (Europe, except G.B., Spain and France)
TOTAL GTS 20 W 50 (Spain), TOTAL GTS 15 W 40 (France)
In very cold climates, below −10°C : TOTAL GTS 10 W 30 (or TOTAL Altigrade GT 10 W 30 in France)

Crankcase capacity :
- After draining : ..... 3 litres (5.3 Imp. pts)
- After draining and changing the cartridge : ..... 3.3 litres (5.8 Imp. pts)
- After draining and removing the rocker covers : ..... 3.2 litres (5.6 Imp. pts)
- After draining and removing the rocker covers and cartridge : ..... 3.5 litres (6.1 Imp. pts)
- Between dipstick min. and max. : ..... 1 litre (1.7 Imp. pts)

Oil pressure at 80° C (176° F) : ..... 5.5 to 6.5 bar (80 to 94 psi) at 6000 rpm
Calibration of pressure switch : ..... 0.5 to 0.8 bar (7.2 tc 11.6 psi)

Oil cooler : 9 elements (Aluminium)

Oil pump :
End float of pinions : ..... 0.1 mm max.

OPERATION
VD1. 112-0

ADJUSTING THE ROCKERS AND CHECKING THE VALVE TIMING

ADJUSTING THE ROCKERS

The adjustment must be carried out with the engine cold.

1. Remove the air filter.

2. Place a container under the rocker covers to collect the oil, and remove the rocker covers.

3. **Set the valve-rocker clearances :**
   Set a valve when the corresponding one, on opposite cylinder, is fully open.
   Inlet : 0.20 mm (0.008 in)
   Exhaust : 0.20 mm (0.008 in)

   NOTE : Raise one front wheel of the vehicle, and engage a gear so as to rotate the crankshaft by means of the raised wheel.

4. **Fit the rocker covers :**
   Make sure that there is no roughness on the joint surface. The contact faces must be dry.
   Stick the gasket on the rocker cover (adhesive BOSTICK 1400 or MINNESOTA F.19).
   Tighten the nut to : 0.5 to 0.7 da Nm (3.5 to 5 ft.lb).

5. Fit the air filter.

6. Warm up the engine for a few minutes, switch off, then check the gaskets for possible leaks.

7. With the engine hot, adjust the slow running if necessary **(850 to 900 rpm).**

8. Top up the engine oil level.

CHECKING THE VALVE TIMING

The check must be carried out with the engine cold.

1. Place a container to collect the oil and remove the rocker cover of the right-hand cylinder.

2. Rotate the crankshaft by turning a front wheel. With a gear engaged, bring the inlet valve to a fully opened position.

Adjust the exhaust rocker clearance **to 2 mm (0.08 in).**

3. Remove the upper proximity detector (2) located on the clutch housing, on the right-hand side.

Rotate the crankshaft *in the direction opposite to the engine normal running* until the stud (1) on the flywheel faces the orifice of the upper proximity detector.

4. Measure the exhaust valve rocker clearance. If the timing is correctly set, the clearance should be between 0.03 and 0.75 mm.

5. Adjust the rockers and fit the rocker cover.
   Tighten the rocker cover nut from 0.5 to 0.7 da Nm (3.5 to 5 ft.lb).

6. Fit proximity detector (2).
   Tightening torque : 2.7 to 3 da Nm (19.5 to 21.5 ft.lb) *(Plain washer).*

78-49

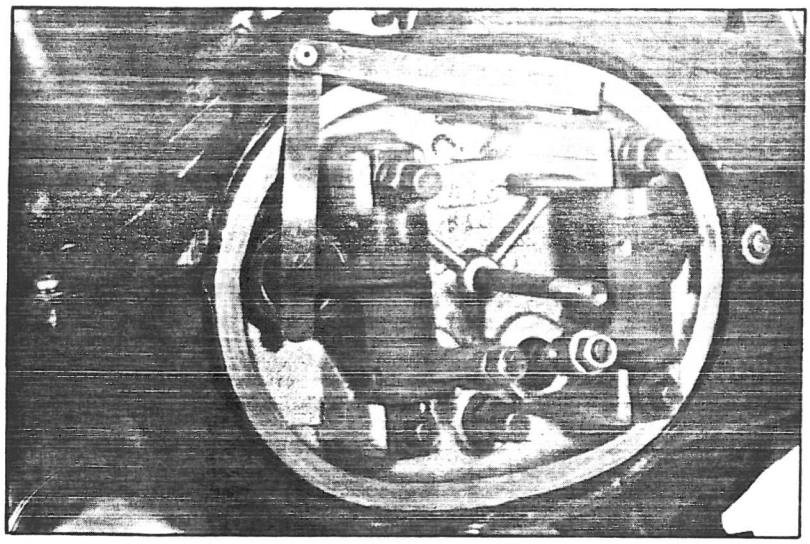

78-47

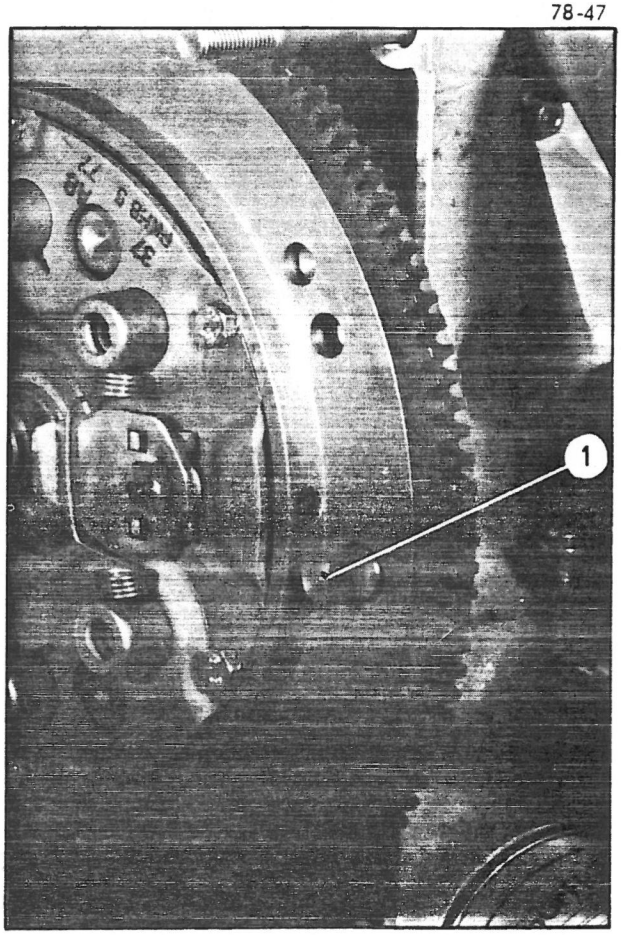

78-413

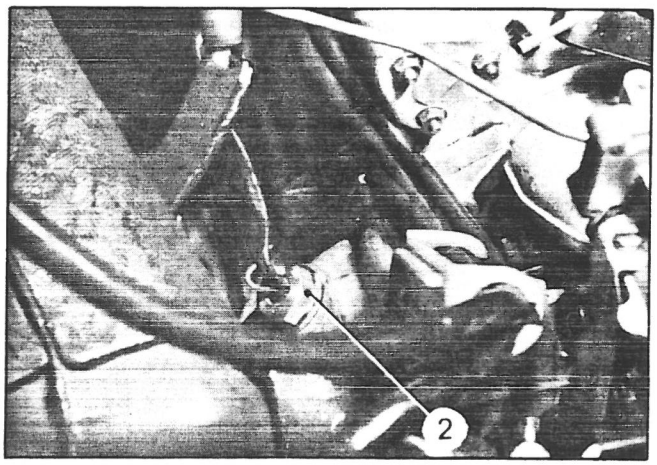

78-414

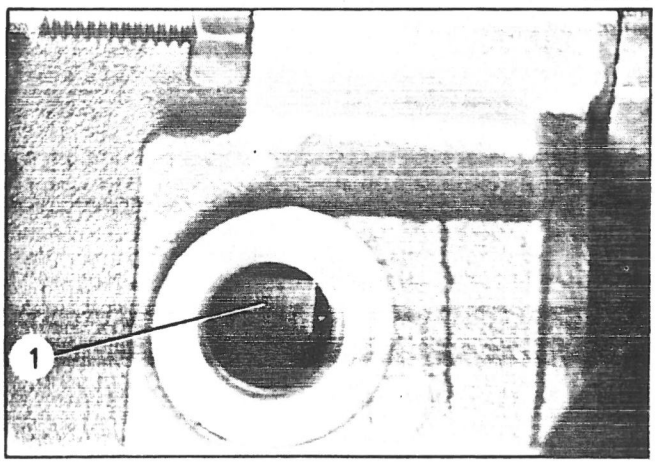

OPERATION
VD1. 142-00

CHARACTERISTICS OF THE CARBURETTOR

CHARACTERISTICS OF THE CARBURETTOR

Twin choke « compound » type
Cold-start strangler flap operates on first choke
Electric cut-out for idling speed circuit
Make : **SOLEX**
Type : **26/35 CSIC, mark 209**

DESCRIPTION		1st choke	2nd choke
Venturi bore :	dia.	21	26
Main jet :	dia.	125 ± 5	130 ± 5
Air correction jet :	dia.	120 ± 20 (1 F 4)	160 ± 20 (2AC)
Emulsion tube :	No.	21 789	21 788
Idling jet :	dia.	41 ± 5	
Air-bleed idling jet :	dia.	190 ± 10	
Orifice (volume control screw) :	dia.	165	
Leakage rate past the butterfly under a pressure of 470 mm of mercury :	kg/h		3.1 ± 0.2
Staggered holes :	qty	4	
	1st dia.	100	
	2nd dia.	100	
	3rd dia.	80	
	4th dia.	130	
Accelerator pump (cam)	No.	59 522 012	
Pump injector :	dia.	40 ± 10	
Total volume of pump :	cm3	0.7 ± 0.15	
Cold-start device :			
Opening of strangler flap (under a pressure of 500 mm of mercury) :	pin dia.	3.2 ± 0.25	
Strangler flap, spring (55 g) :	No.	57 240 012	
Anti-flooding capsule, spring (180 g) :	No.	56 155 022	
Anti-flooding capsule, calibration :	dia.	35	
Ball-operated needle valve :	dia.	170	
Polyamide double float :	Weight	12.3 ± 3 g	

Adjusting the float : with cover removed and turned upside down :
The measurement between the float centre line and joint face of cover **(with gasket in position)** should be **18** ± 1 mm **(0.7 ± 0.04 in)** *permissible difference between the two floats : 1 mm).*

OPERATION
VD1. 142-0

ADJUSTING THE CARBURETTOR

ADJUSTING THE CARBURETTOR

IMPORTANT NOTE : *Except in case the adjustment is carried out on a "L POLLU" test bench, do not tamper with the setting of the stop screw for the second choke butterfly, which has been adjusted by the manufacturer with a micrometer.*

Required conditions for adjusting the idling speed and obtaining readings of CO and CO^2

- Engine cleared from unburnt gases - Rockers and ignition correctly set.
- Accelerator pump control level and choke control lever in rest position (in abutment against the stops).
- Engine oil temperature : 60° to 85° C (140° to 185° F) (the temperature is obtained by running the engine at a 2,000 rpm speed approximately, without altering the setting of the carburettor adjusting screws and without operating the choke).

Idling speed : 850 to 900 rpm

CO and CO^2 readings at rpm speed above :
Carbon monoxide content (CO) : 1 to 2%
Carbon dioxide content (CO^2) : > 9%

Adjusting the idling speed and the CO and CO^2 readings :
- Remove the protective cap from the mixture control screw (original colour : black) and replace it by a cap (colour : white) supplied by the Replacement Parts Department. (Position it without locking it; for the adjustment to be possible).
- Adjust the speed, using stop screw (1) of first choke butterfly.
- Adjust CO, using mixture control screw (4) (screw up to reduce and unscrew to increase).

These two operations are to be carried out as many times as necessary to obtain the speeds and readings mentioned above.

NOTE : After each adjustment, accelerate the engine up to 3,000 rpm approximately, then let the engine drop to idling speed.

- Lock the protective cap of the mixture control screw by pushing it fully over.

Adjusting the accelerator control (without actuating the choke control rod) :
Make sure the butterflies are fully open and the coils of the sheath stop on scuttle are not fully compressed, once the accelerator pedal is fully depressed.
A 1 mm clearance (min) must exist between the pedal and carpet.
Shift position of clip (2) in grooves of sheath stop (3) to achieve these conditions

78-83

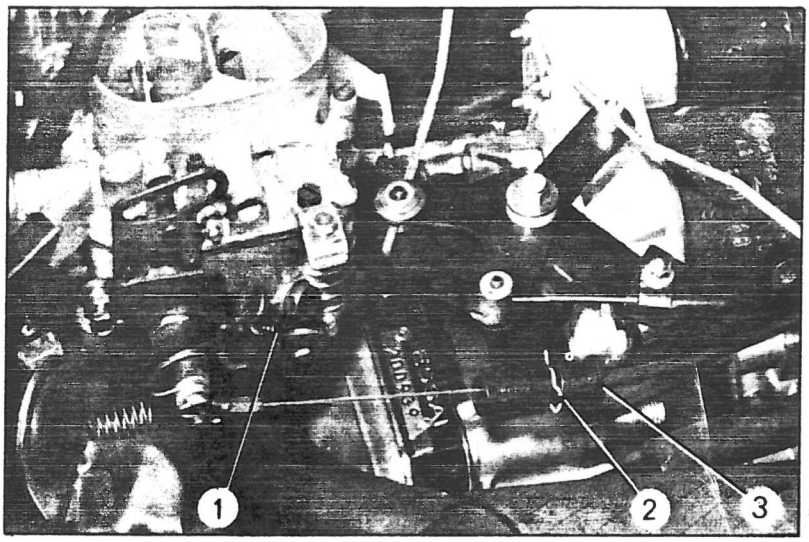

78-306

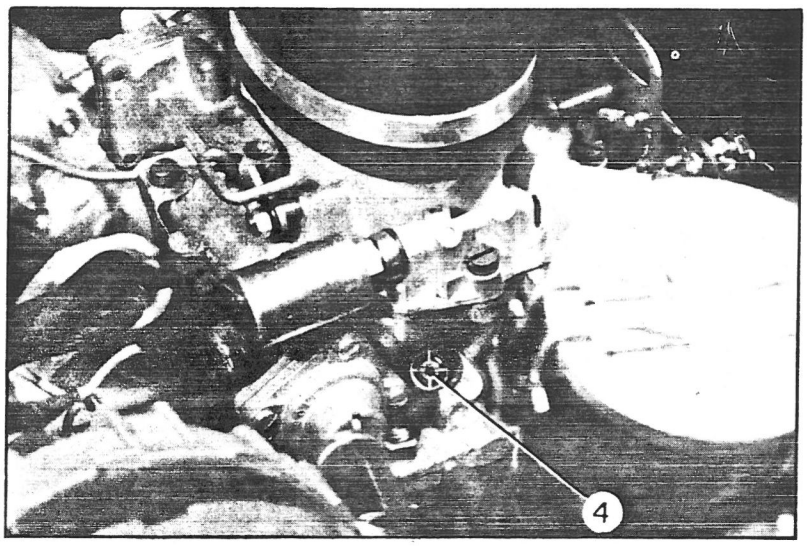

OPERATION
VD1. 210-00

CHARACTERISTICS OF THE IGNITION SYSTEM

"ALL ELECTRONIC IGNITION" SYSTEM

The system comprises the following :

- Two proximity detectors, ① and ② , fixed in the clutch housing.
- A vacuum-sensing transducer ⑤ , made up of a capsule and an earthing switch. It is located under the bonnet catch.
- A computer ⑥ , fitted to the upper section of LH oddments tray.
- A coil ⑦ .

Function of the system elements :

- The *proximity detectors* detect the passing of a metallic stud ③ fixed on the flywheel ④ and deliver with every revolution of the latter a timing pulse which frequency is in relation to the engine rpm speed.
- The *vacuum-sensing transducer* supplies the computer with an indication of engine load and monitors a correction of the advance curve.
- The *computer :* Its main function is :
  - to work out when the spark impulse should be delivered, in relation to instant data on engine speed and pressure in inlet manifold.
  - to provide coil ⑦ with necessary primary current so as to create a steady high energy in the secondary one, whatever the engine speed.

Working principle :

With the engine rotation direction taken into account, detector ② located at static timing point, 10 deg. before TDC. (angle α). *(The static timing is determined by the mechanical location of detector ②).*
Angle β (35 deg.) between detectors ① **and** ② corresponds to the maximum amplitude of predetermined advance, (including possible vacuum advance correction).
For engine speeds under 1,000 rpm, the advance is steady at 10 deg.; the metallic stud, when passing under detector ① makes it possible to trigger detector ② which will deliver the spark as the stud passes under it.
For engine speeds above 1,000 rpm, the advance curve begins to develop, detector ① supplies the computer with the entry data, enabling for it the working out of a time lag in relation to the maximum advance point, so as to deliver the spark at the time required. The spark always occurs within the time period when the metallic stud runs into the sector between detectors ① and ② .

A vacuum-sensing transducer (capsule + switch) supplies the computer with an indication for correcting by a 10 deg. advance the amplitude of ignition advance. (the vacuum intake is upstream of the carburettor butterfly). This correction is carried out with a one- second time delay, with a vacuum above 150 m.bars (2.2 psi) in the inlet manifold, and when the engine speed is greater than or equal to the rpm speed at the beginning of the advance curve.

A timer unit is incorporated with the device so as to warn of an extended energizing of the coil. The current in the ignition coil is automatically cut off if the metallic-stud passing under the detectors has not occured after 0.5 to 2 seconds.

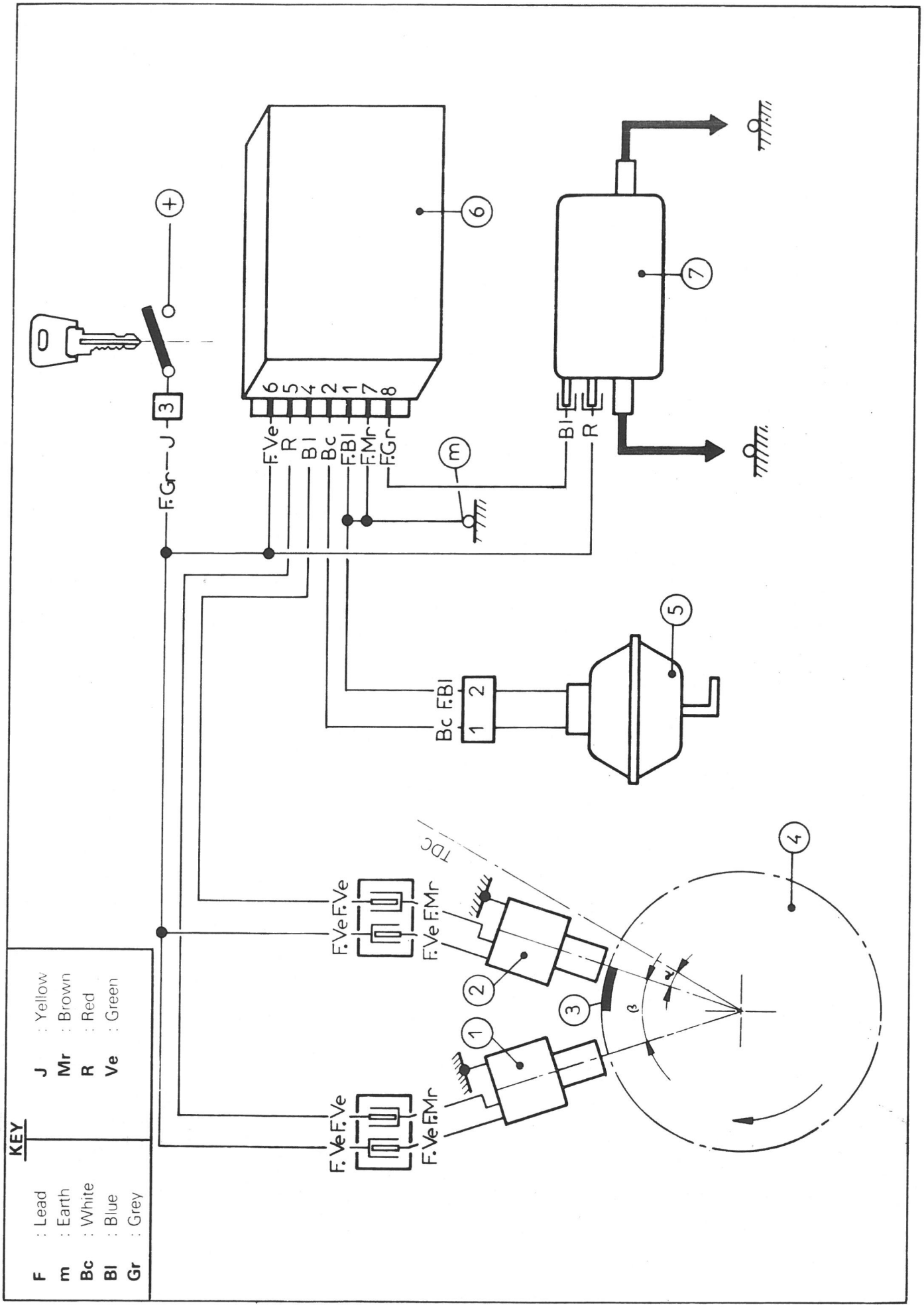
KEY
F : Lead
m : Earth
Bc : White
Bl : Blue
Gr : Grey
J : Yellow
Mr : Brown
R : Red
Ve : Green
F.Gr
J
3
+
F.Ve
R
Bl
Bc
F.Bl
F.Mr
F.Gr
6 5 4 2 1 7 8
m
Bl
R
Bc F.Bl
1 2
TDC
F.Ve F.Ve
F.Ve F.Mr
F.Ve F.Ve
F.Ve F.Mr
1
2
3
4
5
6
7

CHARACTERISTICS

Computer : *(All-Electronic Ignition)*
THOMSON : 20 164 011
MOTOROLA : 6 AE 2031 B

Proximity detectors (sensors) :
THOMSON
DUCELLIER

Special features :
- Spacer washer = 2 mm. It must, without fail, be placed under the detector when fitting the latter to the housing.
- Distance from seating face on housing to metallic stud : 41 ± 0.3 mm
  (For indication purposes, gap between detector and stud : 1 ± 0.5 mm)
- **Tightening torque : 2.7 to 3 da Nm (19.5 to 21.5 ft.lb)**

Ignition coil :
DUCELLIER 520010 A
Primary circuit resistance : 0.6 to 0.8 Ω
Secondary circuit resistance : 10,200 Ω approx.

H.T. leads :
ELECTRICFIL
Resistance of leads :
L.H. : $510\ ^{+347}_{0}\ \Omega$
R.H. : $425\ ^{+300}_{0}\ \Omega$

Sparking plugs (with conical seating) :
Tightening torque (cylinder head cold) : **1 to 1.3 da Nm (7 to 9.5 ft.lb), dry. Use the tools recommended below. They are supplied by the Replacement Parts Department :**

- Handle, with automatic cut-out : . . . No. OUT 128 301-T
- Plug spanner : . . . . . No. OUT 128 304-T

Spark plug gap : 0.6 to 0.7 mm (0.023 to 0.027 in)
Makes and types : Refer to Technical Bulletins

OPERATION
VD1. 210-0

CHECKING THE IGNITION

813-1 (I)

CHECKING THE IGNITION

1. Checking proximity detectors ① and ② :

a) Disconnect the red-mark connector from the ignition coil.

b) Check lower detector ① :

- Slightly spread apart the two sections of the detector connector so as to connect a voltmeter :
  - voltmeter "+" at « a » (terminal corresponding to female way of connector : at detector end),
  - voltmeter "—" at earth.
- Switch on the ignition.
- Rotate the crankshaft by the flywheel in the direction of rotation :

  The voltmeter should indicate the following voltages :
  - From 0.5 to 2 volts when the stud on flywheel is not under the detector,
  - From 5 to 7 volts when the stud on flywheel is under the detector.

c) Carry out the same check for upper detector ② :

d) Connect the red-mark connector to the ignition coil.

2. Checking vacuum-sensing transducer ⑤ :

a) Connect a vacuum gauge in parallel between capsule and carburettor.

b) Start the engine, and let it run at idling speed.

c) Connect a voltmeter to the rear section of the detector connector without disconnecting the latter.
  - voltmeter "+" at white marked terminal at « b »
  - voltmeter "—" at blue lead terminal at « c ».

The voltmeter needle should flick.

d) Race the engine :

From a vacuum between 120 and 180 m.bars (1.7 to 2.6 psi), the voltmeter should read zero volt.

e) Disconnect the checking instruments and stop the engine.

3. Checking the correct passing of current into the primary winding of ignition coil ⑦ :

a) Connect a voltmeter to the coil primary winding without disconnecting the terminals :
  - voltmeter "+" on coil "+" (red mark) at « d »
  - voltmeter "—" on coil "—" (blue mark) at « e ».

b) Switch on the ignition :

The voltmeter needle slightly flicks and should return to zero almost immediately.

c) Switch off the ignition and disconnect the voltmeter.

4. Checking the advance curve development and vacuum advance correction :

a) Find the static setting :

Apply same procedure as in par. 1 for checking upper detector ② .

The engine is at static setting at the very moment when the voltmeter reads a 5 to 7 V voltage.

Mark out a white paint stroke on the flywheel and another one, facing it, on the crankcase.

b) *Disconnect the pipe from the capsule* and check the curve development **(see page 4)** using a timing light with phase shifter, or a diagnostic equipment *(rpm engine speed).*

(When using the timing light independently, divide the reading by two).

c) *Reconnect the capsule :* The advance setting readings should be *10° above* the ones previously recorded without the capsule.

5. Checking the circuits continuity, using an ohmmeter (ignition shut off).

Disconnect the connector from computer ⑥ .

NOTE : Earth « m » is located on the securing screw for flasher unit.

6. Checking the resistance of H.V. leads and ignition coil :

(See values in Operation VD1. 210-00).

V 21-1

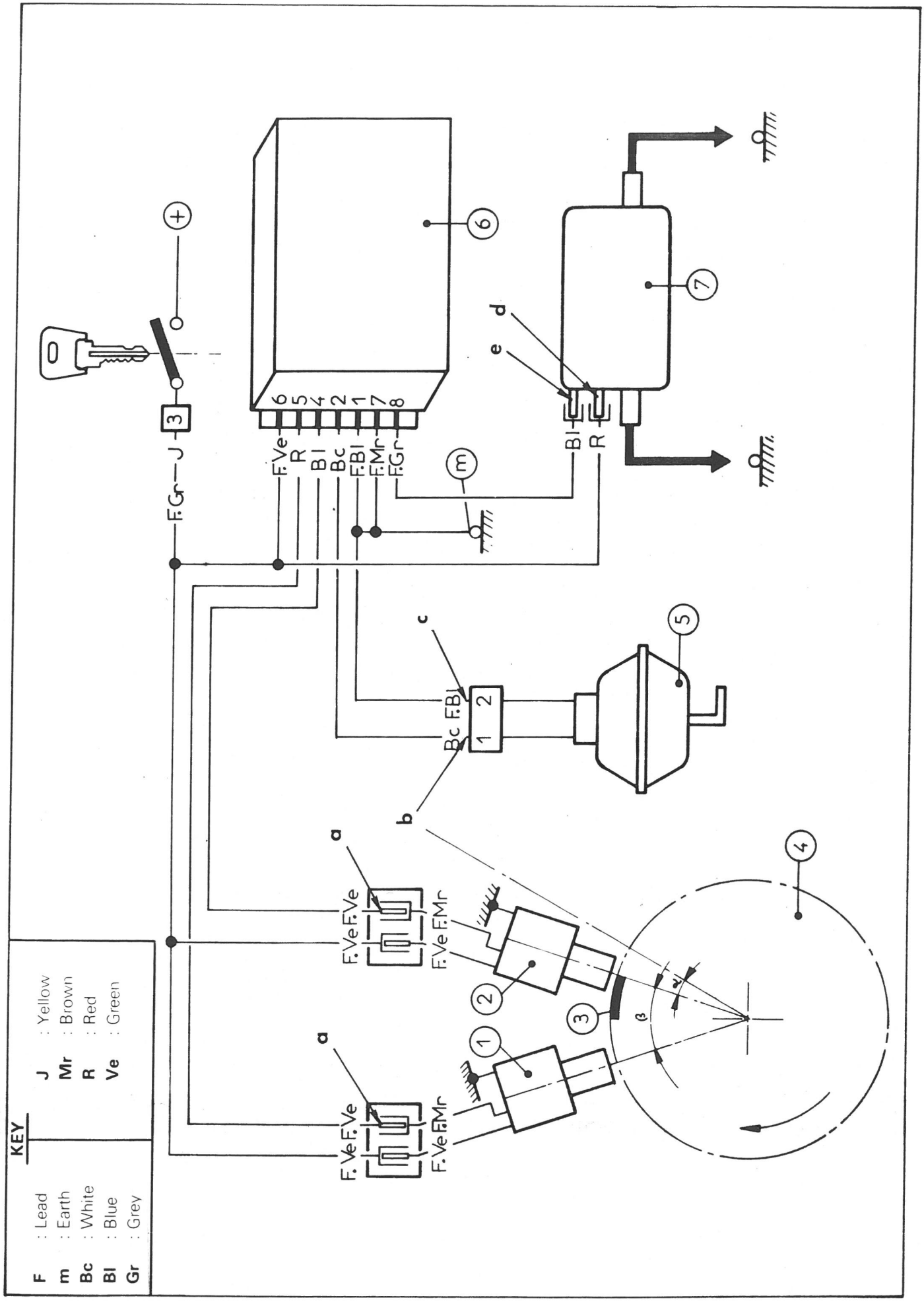
KEY
F : Lead
m : Earth
Bc : White
Bl : Blue
Gr : Grey
J : Yellow
Mr : Brown
R : Red
Ve : Green
F:Gr
J
3
+
6
F:Ve
R
Bl
Bc
F:Bl
F:Mr
F:Gr
6 5 4 2 1 7 8
m
7
d
e
Bl
R
c
5
Bc F:Bl
1 2
b
a
F:Ve F:Ve
F:Ve F:Mr
4
1
2
3
α
β
a
F:Ve F:Ve
F:Ve F:Mr

813-1 (I)

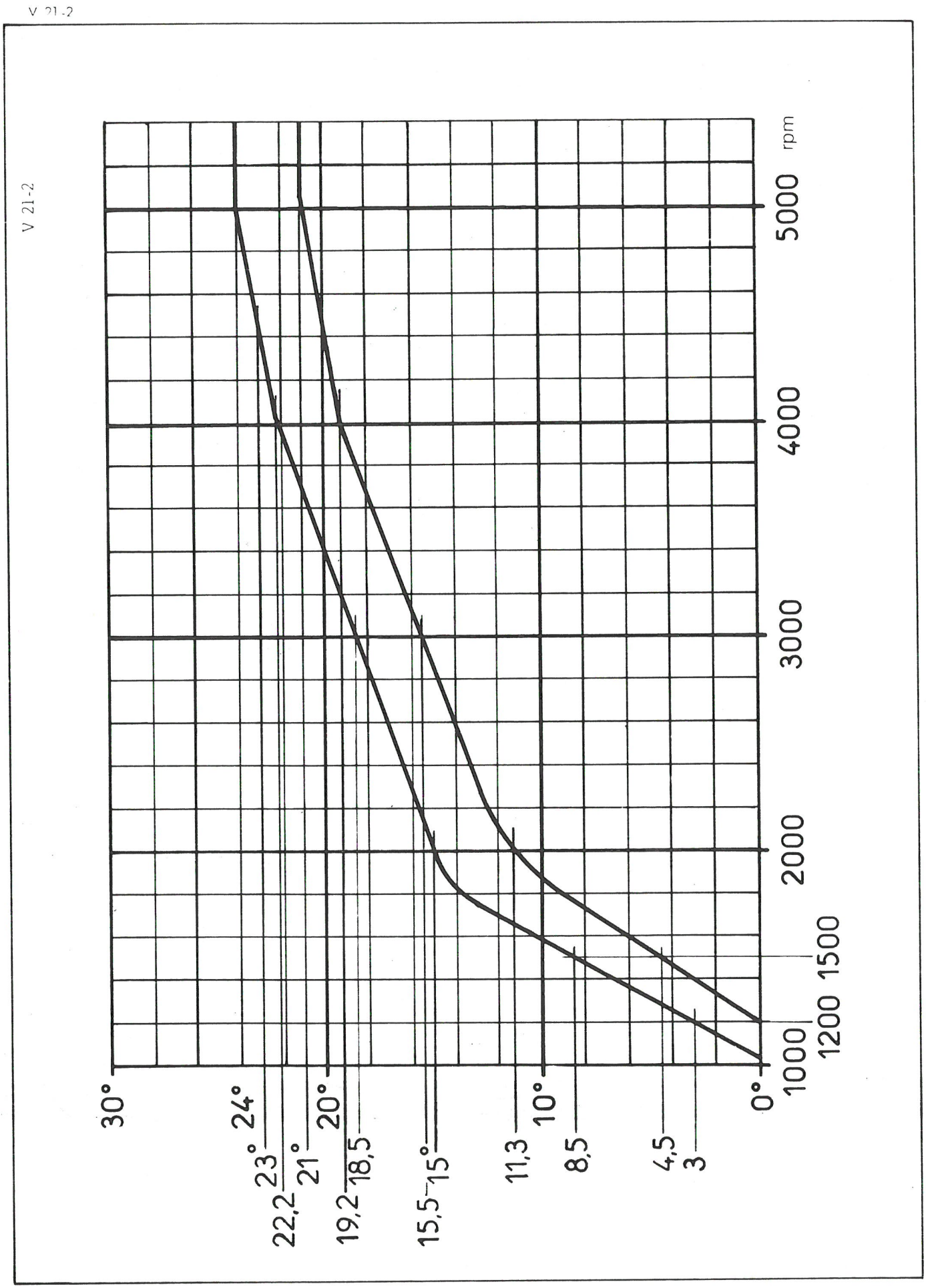
V 21-2
V 21-2
30°
24°
23°
22,2
21°
20°
19,2
18,5
15,5
15°
11,3
10°
8,5
4,5
3
0°
1000
1200
1500
2000
3000
4000
5000
rpm

OPERATION
VD1. 220-0

CHECKING THE OIL PRESSURE
CHECKING THE CRANKCASE VACUUM

CHECKING THE OIL PRESSURE

1. Run the engine until the oil temperature is around 80° C (176° F).

2. Stop the engine.
Remove the air filter.

3. Remove (from crankcase L.H. side) oil-pressure switch (1) and substitute union 4042-T (copper gaskets), fitted with pressure gauge 2279-T calibrated from 0 to 10 bars (0 to 150 psi) and a rev-counter.

4. Check the oil pressure :
Start the engine and let it run at 6,000 rpm.
The pressure should be : 5.5 to 6.5 bars (80 to 94 psi).
If the pressure is incorrect, fit a new relief valve spring, placed in plug (2) (lower L.H. side of crankcase). **In that case, the engine should have been previously drained.**

If this action fails to correct the pressure, the oil pump and lubrication system must be checked.

5. Remove pressure gauge 2279-T, union 4042-T and rev-counter.

6. Fit oil-pressure switch (1) *(with copper washer)*.
Tightening torque : 2 da Nm (14.5 ft.lb).
Connect the pressure-switch lead.

7. Fit the air filter.

8. Check, and top up if necessary, the engine oil level.

CHECKING THE VACUUM IN THE CRANKCASE

1. To check the vacuum in the crankcase, use a water gauge MR. 630-56/9 a
One of the ends will be connected to pipe (3), linking the air filter to air breather.

2. With engine running idle slightly accelerate, so as to stabilize levels in the gauge.

The liquid should rise on that side of the gauge connected to the engine.

Read the difference in levels :
It should be :
- with engine idling : 5 cm (2 in) of water min. If not, renew the breather.

The vacuum should never drop to zero.

3. Remove water gauge MR. 630-56/9 a and connect pipe (3) to the air filter.

78-433

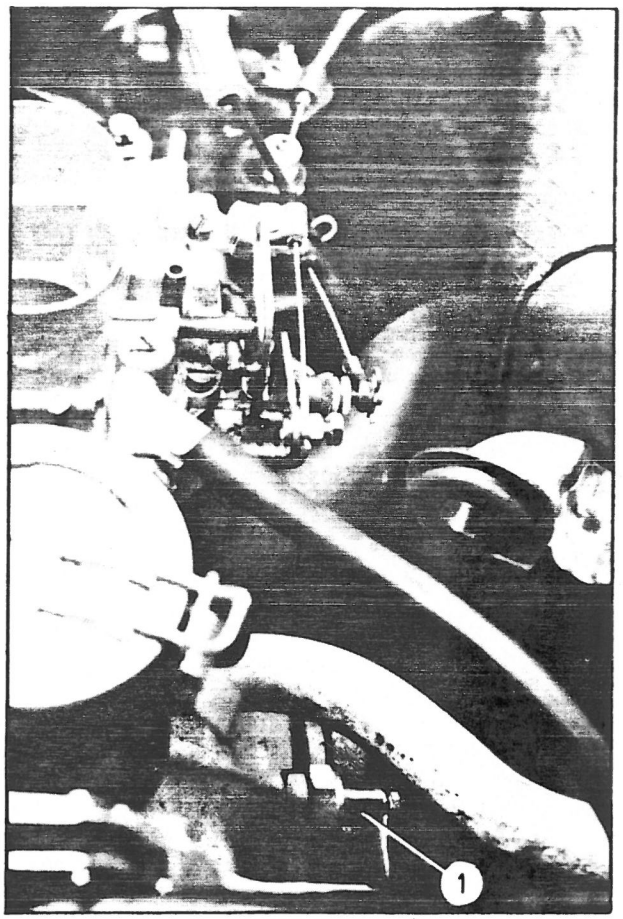

78-434

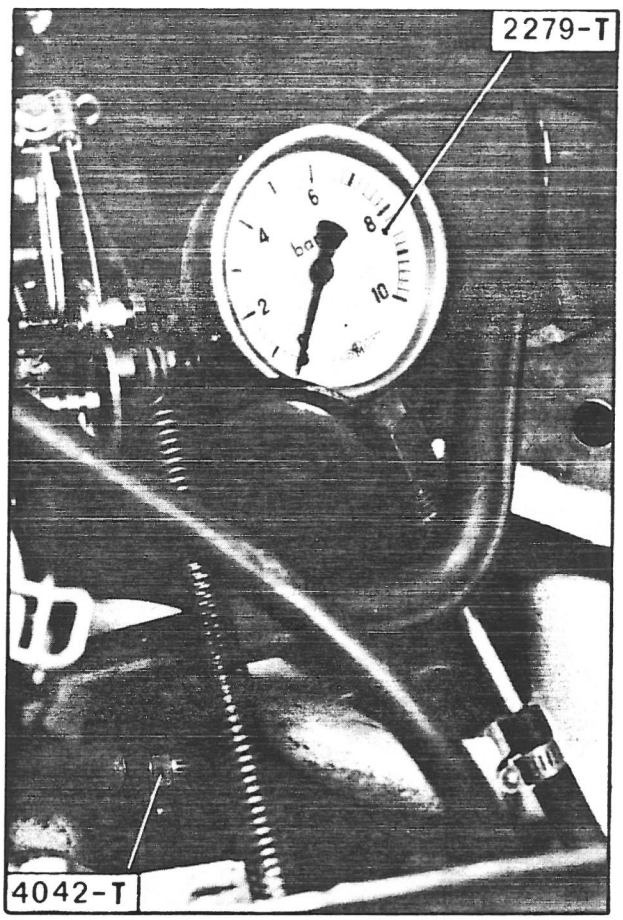

78-164

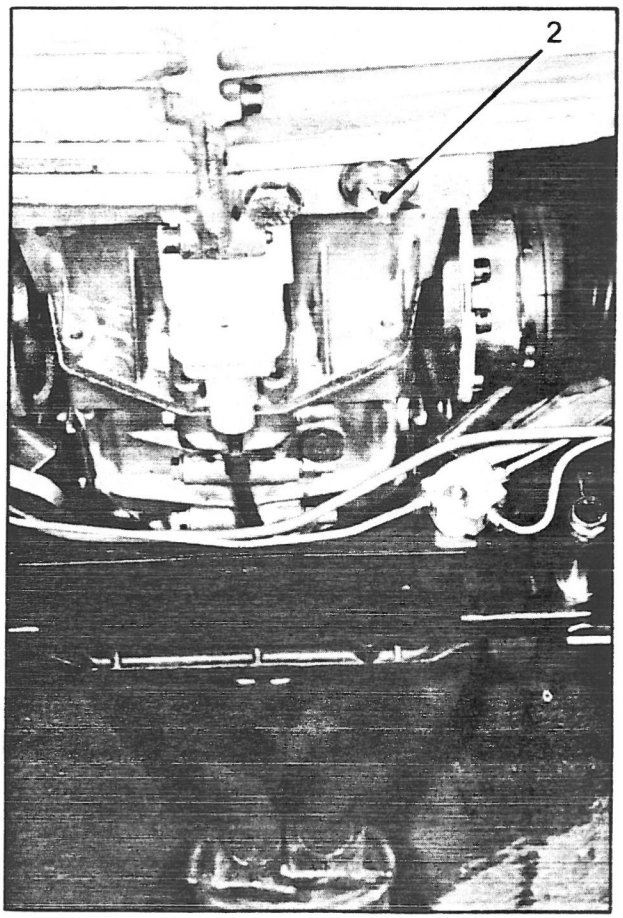

78-435

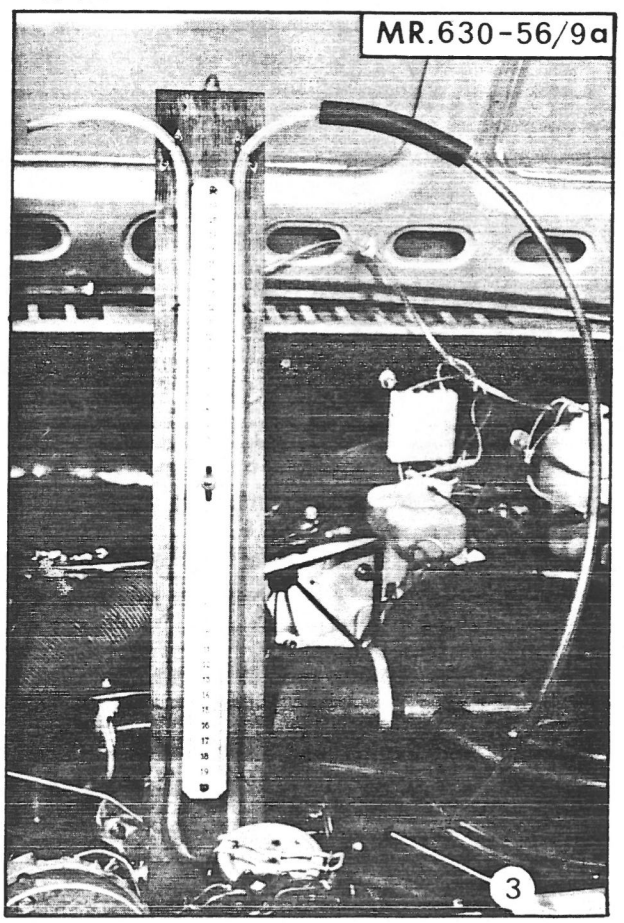

OPERATION
VD1. 312-00

CHARACTERISTICS AND SPECIAL FEATURES OF THE CLUTCH

CHARACTERISTICS

- Mechanism : ..... FERODO,P K H B 5 type
- Disc (progressive type) : ..... « DENTEL » type
- Disc hub : ..... 18 splines
- Lining : type : ..... A 3 S
- Thrust bearing : ..... Ball type

SPECIAL FEATURES

Clutch disc :
- Thickness : ..... $7.4\ ^{+0.05}_{-0.25}$ mm

Clutch disc :
- 6 springs (with light grey mark)
- Clearance between thrust bearing and release levers : ..... 1 to 1.5 mm (0.04 to 0.06 in)
- Pedal free play : ..... 20 to 25 mm (0.78 to 0.98 in)
- Fork shaft screw (1) fitted with LOCTITE FRENETANCH

Adjusting the release levers :
- Distance between top of release levers and thrust plate : ..... H = 25.6 to 26.3 mm (1 to 1.03 in)
- Distance between plate and housing for clutch mechanism : ..... h = 12 mm (0.47 in)

Checking the clutch free play :

Procedure :
Keep the clutch cable taut by pulling its end (under the vehicle).
By exerting a pressure (➔) on the fork, there should be a 3 to 4 mm (0.12 to 0.16 in) clearance at fork end (near cable hooking point). This corresponds to a 1 to 1.5 mm (0.04 to 0.06 in) clutch clearance *(slight play)* between the ball thrust bearing and release levers and a clutch pedal free movement of 20 to 25 mm (0.78 to 0.98 in).

V. 31-2

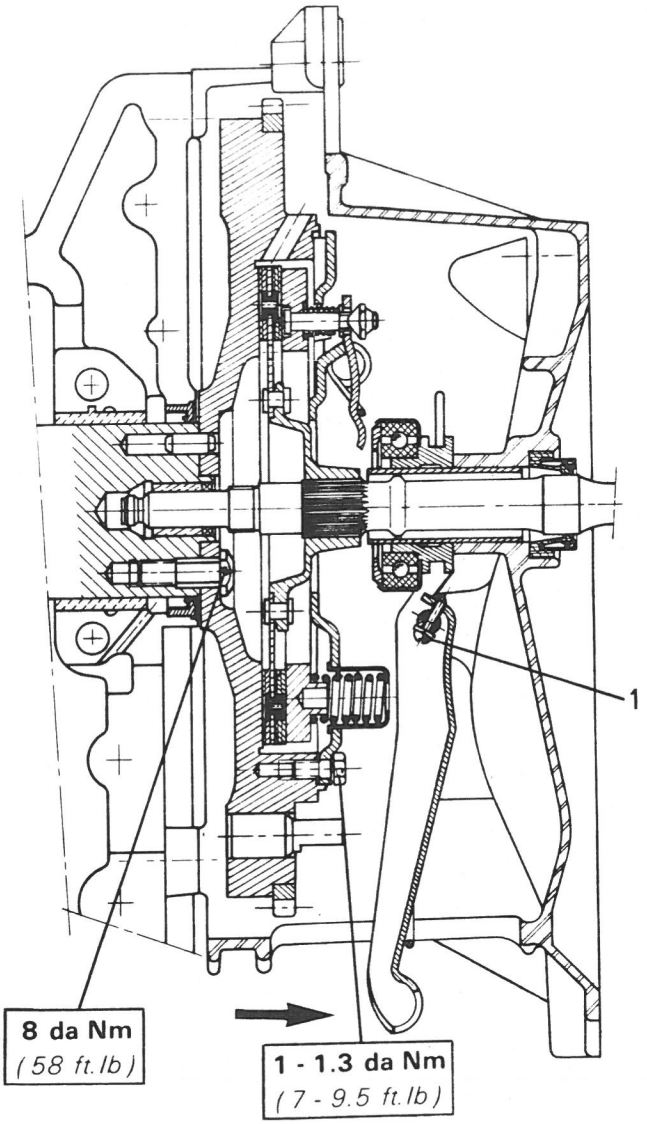

A. 31-3

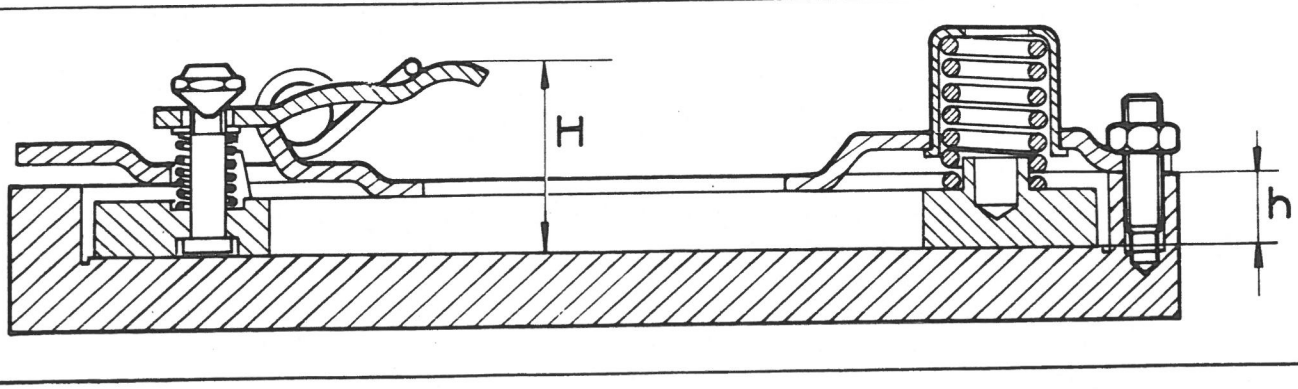

OPERATION
VD1. 330-00

CHARACTERISTICS AND SPECIAL FEATURES OF THE GEARBOX

CHARACTERISTICS

I. Gear ratios :

NOTE : Speeds are given for vehicles equiped with 135 SR 13 XZX tyres, the rolling circumference of which is 1.670 m (5 ft 5.7 in) under load.

Gear	Gearbox ratios	Crownwheel and pinion	Overall ratios	Speed at 1,000 rpm in kph	(mph)
1 st	(11/50) 4.545 : 1		18.749 : 1	5.344	3.321
2 nd	(18/45) 2.500 : 1		10.312 : 1	9.716	6.038
3 rd	(28/46) 1.642 : 1	(8/33)	6.776 : 1	14.785	11.674
4 th	(34/39) 1.147 : 1	4.125 : 1	4.731 : 1	21.176	13.160
Reverse	(11/23 ± 23/46) 4.181 : 1		17.249 : 1	5.808	3.609
Speedometer drive ratio : 5 × 12					

II. Lubrication :

-Oil grade : ..... TOTAL EP SAE 80 W/85 W
-Capacity after draining : ..... 1.4 litres (2.5 Imp. pts)

III. Gear control :

-Floor mounted gear lever.

IV. Rear cover :

-It can be removed without removing the gearbox.

SPECIAL FEATURES

Adjustments :

- End float between primary shaft and mainshaft : ..... min. clearance
- End float of 1 st - 2 nd gear synchro hub : ..... 0.05 mm max.
- End float of 3 rd - 4 th gear synchro hub : ..... 0.05 mm max.
- Clearance of half washers between 2 nd and 3 rd pinions : ..... 0.05 mm max.
- Backlash between crownwheel and bevel pinion : ..... 0.13 to 0.27 mm
- Total preload on differential ball bearings : ..... 0.05 mm

GEAR SEQUENCE

Fig. 1 : 1 st gear
Fig. 2 : 2 nd gear
Fig. 3 : 3 rd gear
Fig. 4 : 4 th gear
Fig. 5 : Reverse gear.

NOTE : The primary shaft pinions are in constant mesh with the driven pinions of 1 st, 2 nd, 3 rd and 4 th gears.

V 33-6

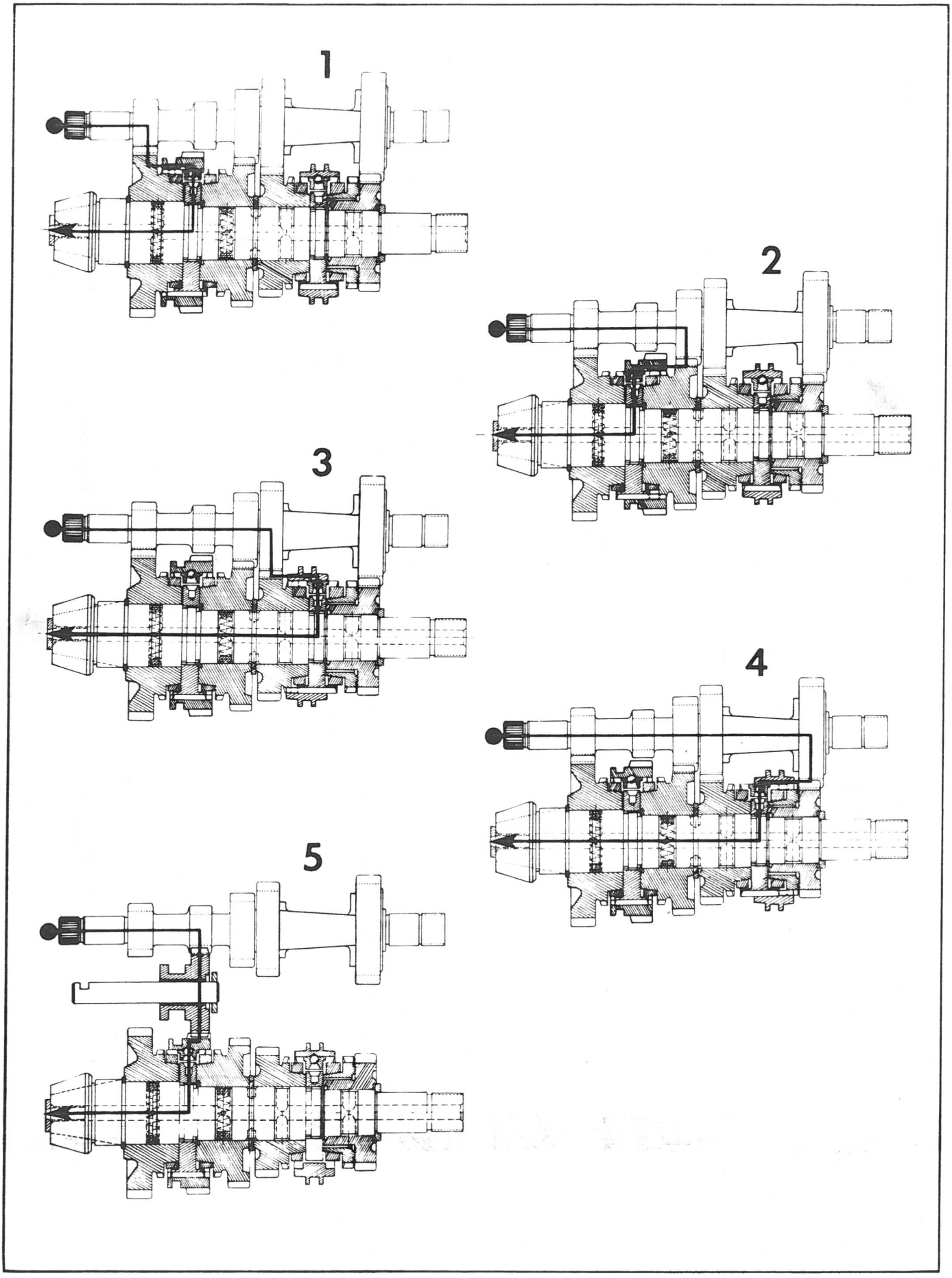

V. 33-1

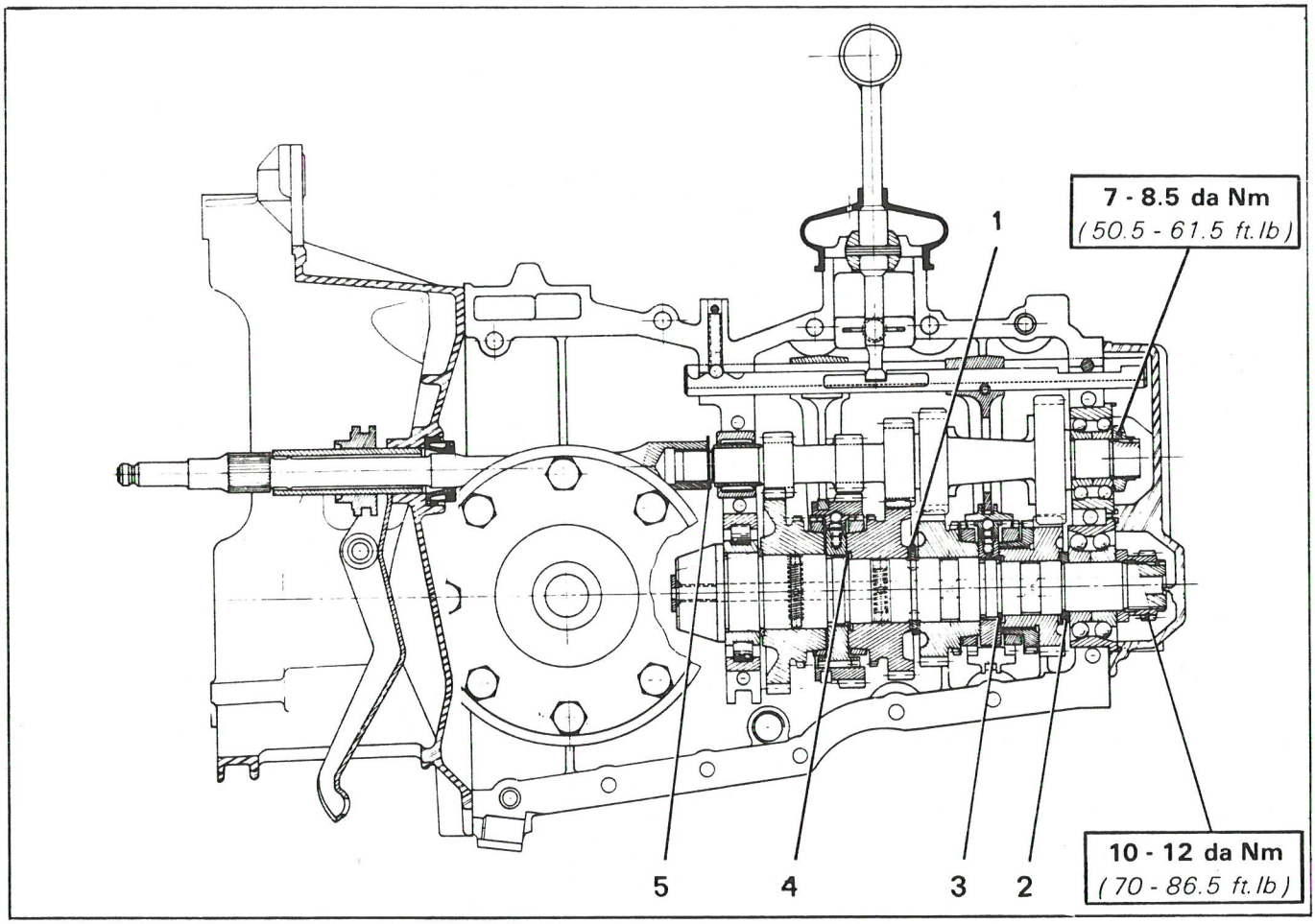
7 - 8.5 da Nm
(50.5 - 61.5 ft.lb)
1
10 - 12 da Nm
(70 - 86.5 ft.lb)
5
4
3
2

V. 33-2

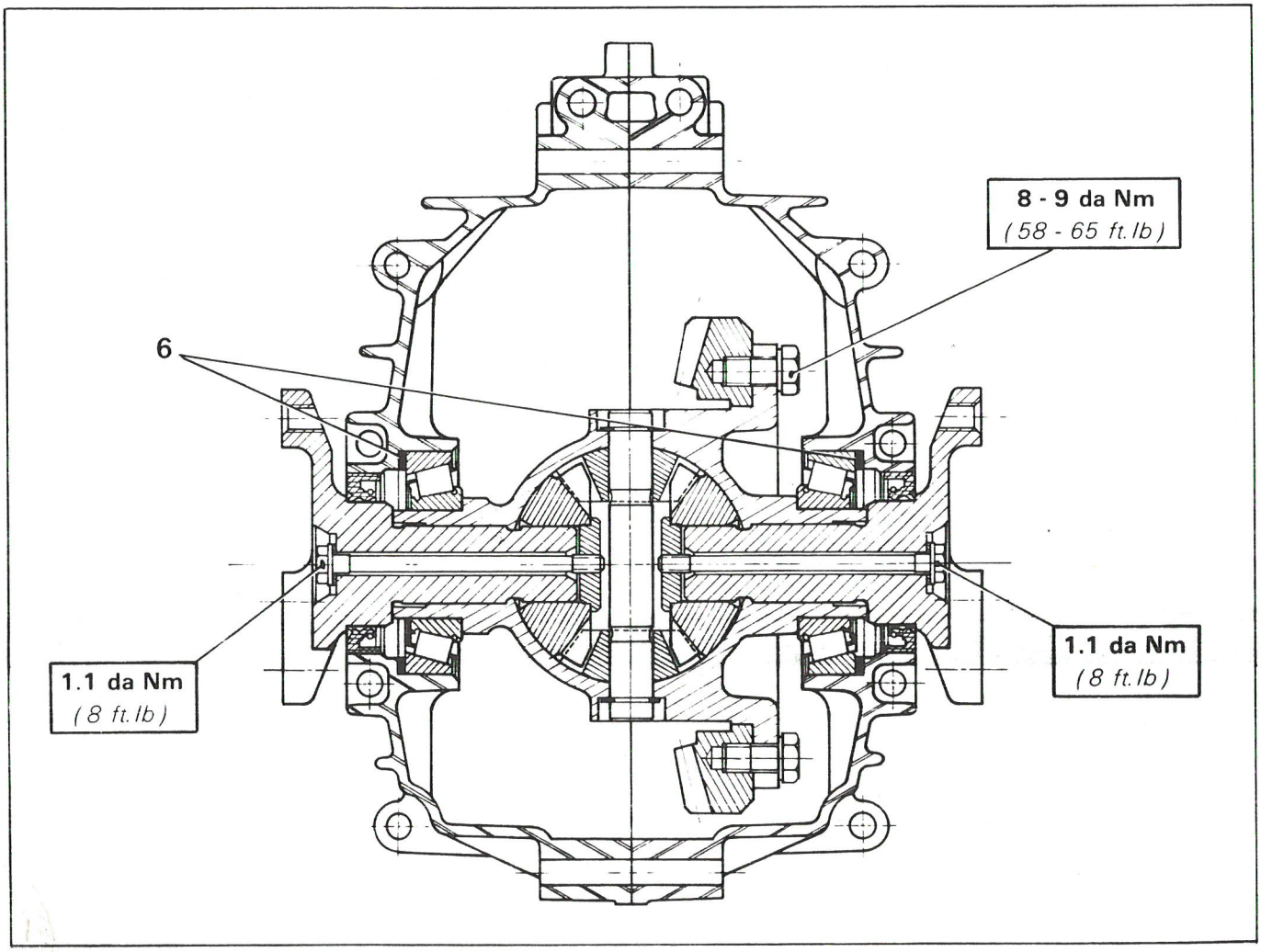
8 - 9 da Nm
(58 - 65 ft.lb)
6
1.1 da Nm
(8 ft.lb)
1.1 da Nm
(8 ft.lb)

LONGITUDINAL SECTION

Adjustment shim dimensions :

1 : 6 half-shims from 2.56 to 2.71 mm, in steps of 0.05 mm
2 : 34 shims from 2.50 to 3.82 mm, in steps of 0.04 mm
3 : 5 shims from 1.42 to 1.58 mm, in steps of 0.04 mm
4 : 5 shims from 1.42 to 1.58 mm, in steps of 0.04 mm
5 : Shim thickness : 1.2 mm.

CROSS SECTION

6 : 44 shims from 1.60 to 3.75 mm, in steps of 0.05 mm.

OPERATION
VD1. 372-00

CHARACTERISTICS AND SPECIAL FEATURES OF THE DRIVE SHAFTS

813-1 (I)

CHARACTERISTICS

- 1 tri-axe joint at gearbox end
- 1 constant velocity ball-joint at wheel end

SPECIAL FEATURES

Lubrication :

- Grease : ..... TOTAL MULTIS MS

Mandatory tightening torque (with torque spanner) :

- Nut securing drive shaft on hub : ..... **23 to 26 da Nm (166 to 188 ft.lb)**
  (locking : by knocking the metal over)

- Screw securing drive shaft on gearbox outlet : ..... **2.8 da Nm (20 ft.lb)**
  (spring washer).

Recommended tightening torque :

- Screws securing the gearbox outlet on gearbox : ..... **1.1 da Nm (8 ft.lb)**
  (copper washer).

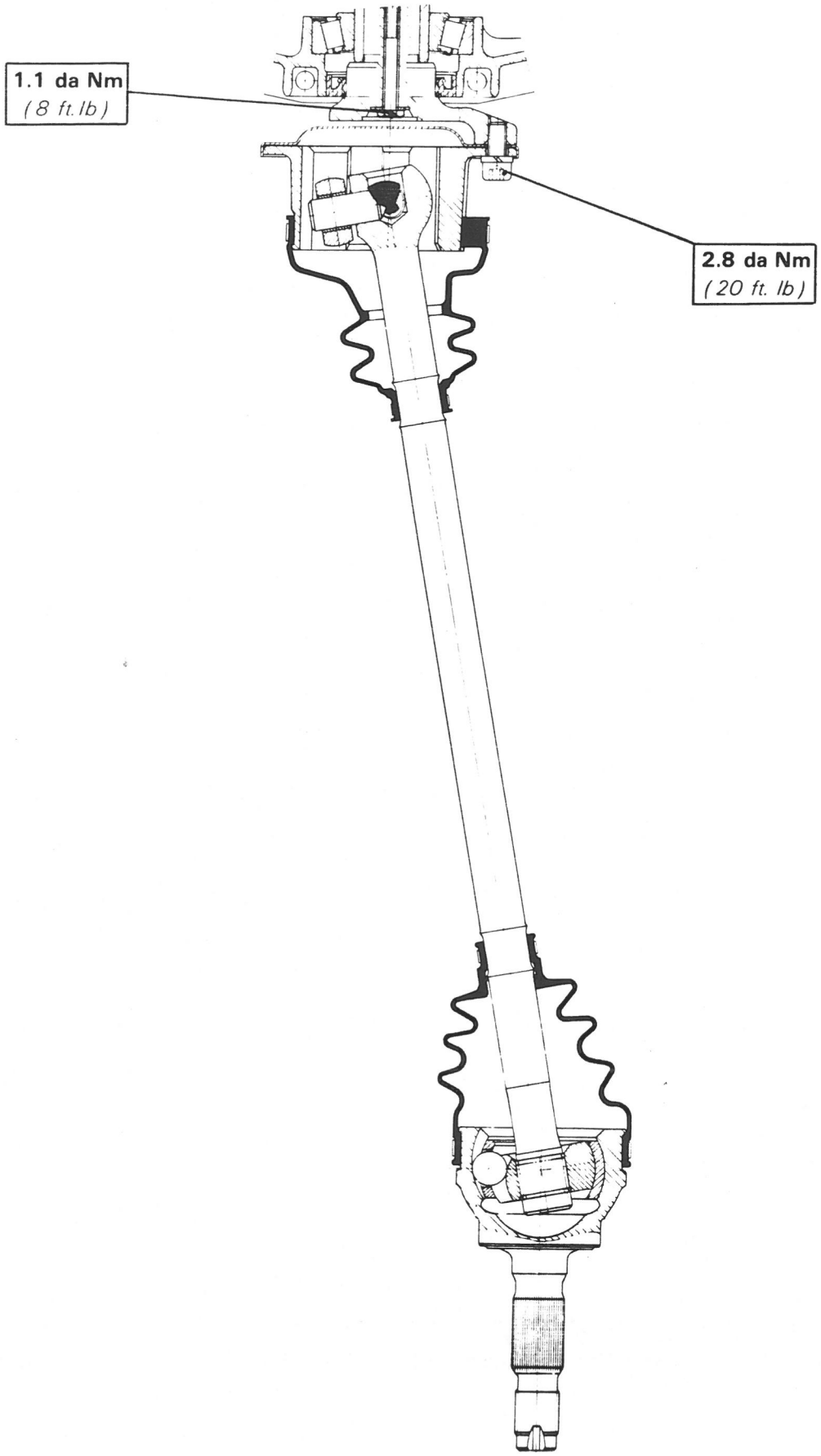
1.1 da Nm
(8 ft. lb)
2.8 da Nm
(20 ft. lb)

OPERATION
VD1. 410-00

CHARACTERISTICS AND SPECIAL FEATURES OF THE FRONT AXLE

I. CHARACTERISTICS

Conditions required for check and adjustment :

With vehicle empty, in running order, 5 litres (8.8 Imp. pts) in petrol tank, check the following :
- The front height which should be 177 ± 10 mm (6.96 ± 0.39 in). The measure should be taken from **"A"** area, under the vehicle, to the ground.
- The rear height (see Op. VD. 420-00).

Alignment (adjustable), toe-in : . . . . . 1 ± 1 mm
Castor (non-adjustable) : . . . . . 2° 37' ± 30'
Swivel pin inclination (non-adjustable) : . . . . . 9° 05' ± 40'
Camber (non-adjustable) : . . . . . 0° 45' ± 30'

II. SPECIAL FEATURES

- Wheel alignment adjustment is carried out by acting upon steering link rods, L.H. and R.H.

- Ball-joints for lower arms and link rods are non-removable.

V. 43-4

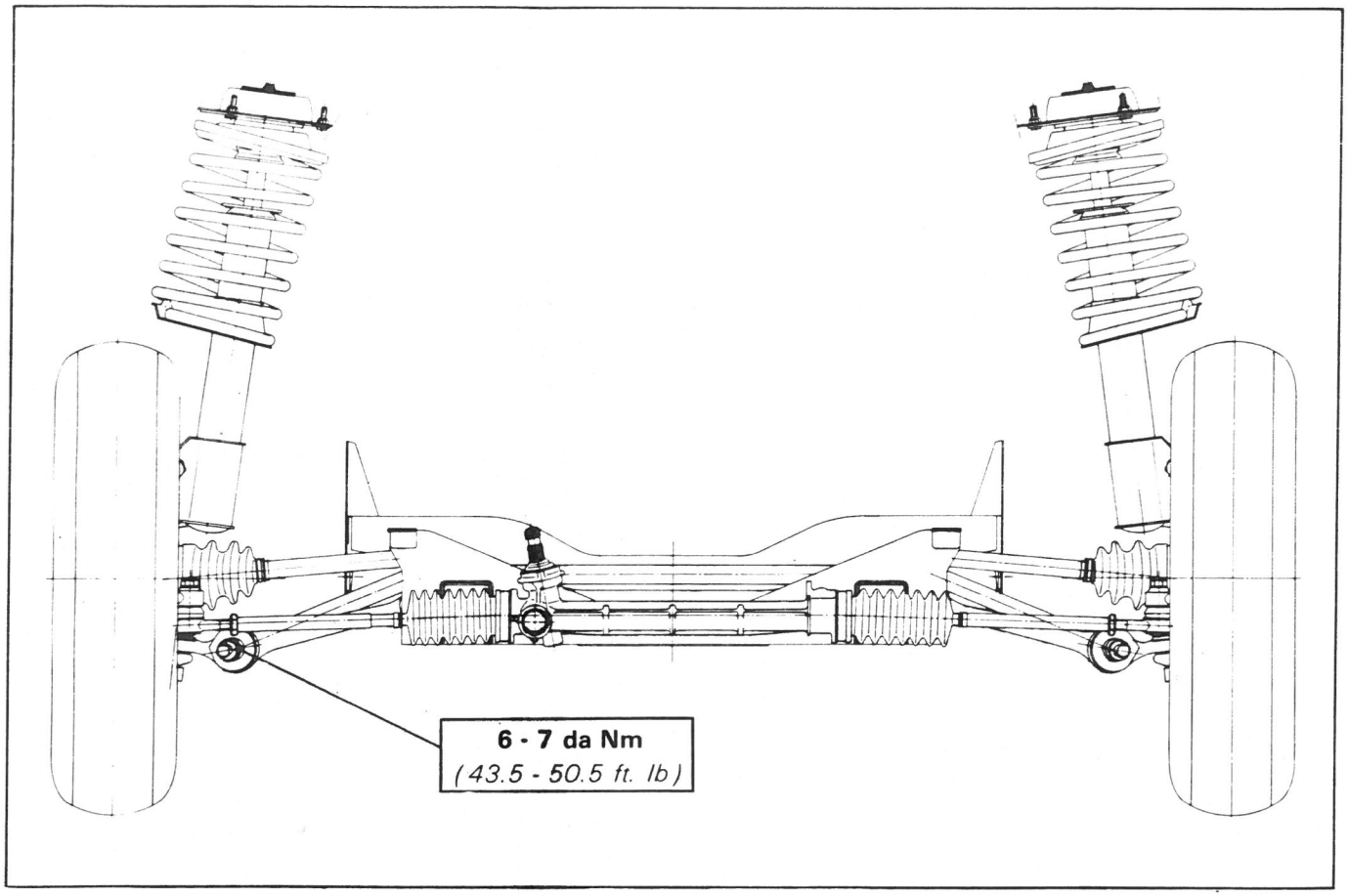

V. 41-1

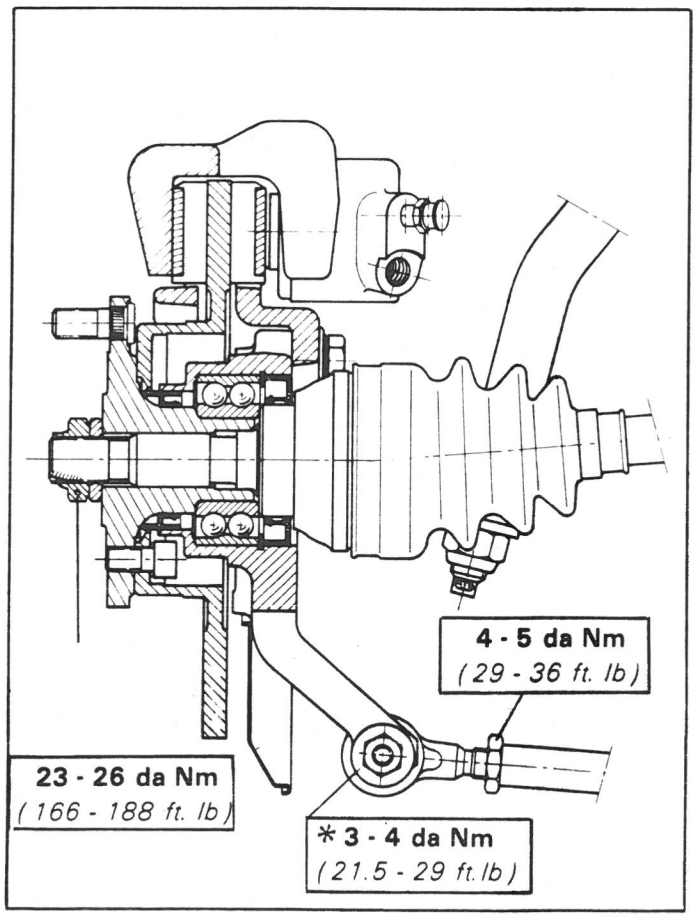

78-159

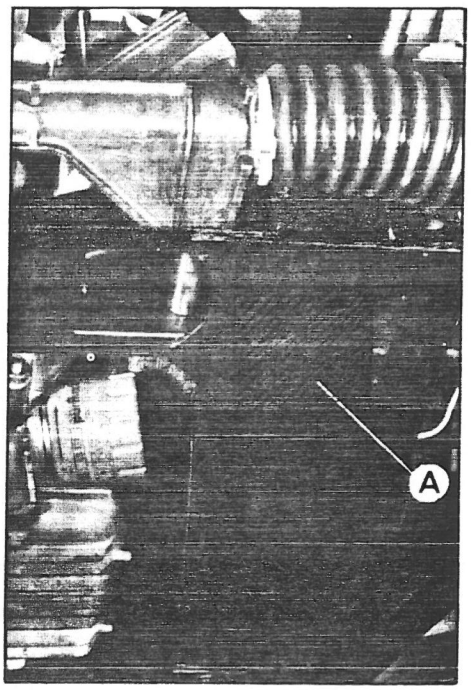

OPERATION
VD1. 410-0

CHECKING AND ADJUSTING THE FRONT AXLE

CHECKING THE ALIGNMENT OF THE FRONT WHEELS

Conditions required for the check

With vehicle empty, in running order, 5 litres (8.8 Imp. pts) in tank, check the following :
- The front height which should be 177 ± 0.10 mm (6.96 ± 0.39 in). The measure should be taken from "A" area, under the vehicle, to the ground.
- The rear height (see Op. VD1. 420-0).

The checking operation can be carried out by using a mechanical or optical equipment, with the vehicle standing on a flat level surface.

Toe-in : 1± 1 mm

ADJUSTING THE ALIGNMENT

The adjustment is obtained by rotating tie-rods (2) of the steering link rods, LH and RH, once nuts (1) have been loosened.

IMPORTANT : The **lengthes** of visible thread at « a », LH and RH side, **should be even to within 2 mm.**
Tightening torque for nuts (1) : 4 to 5 da Nm (29 to 36 ft.lb).

78-159

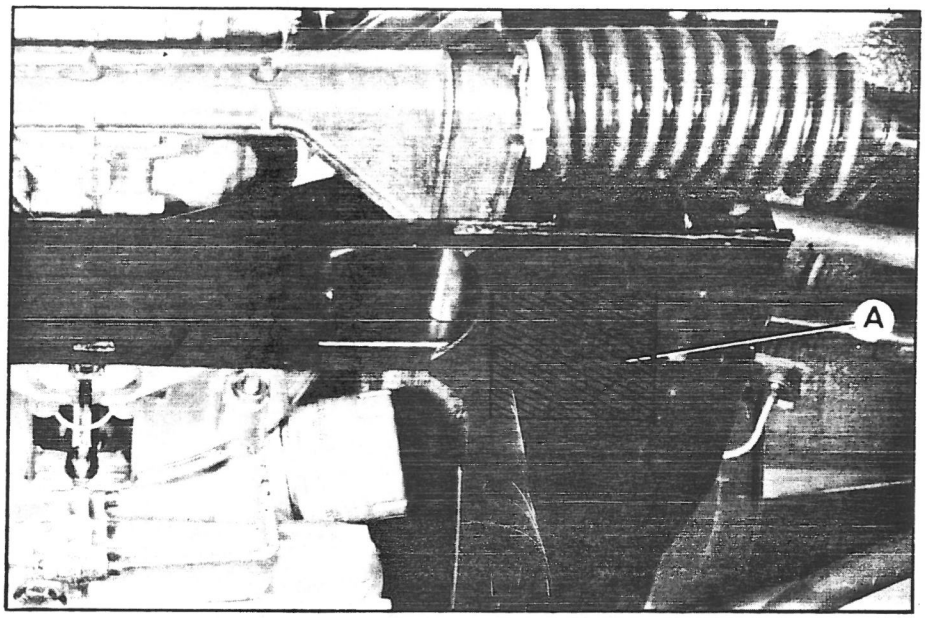

78-161

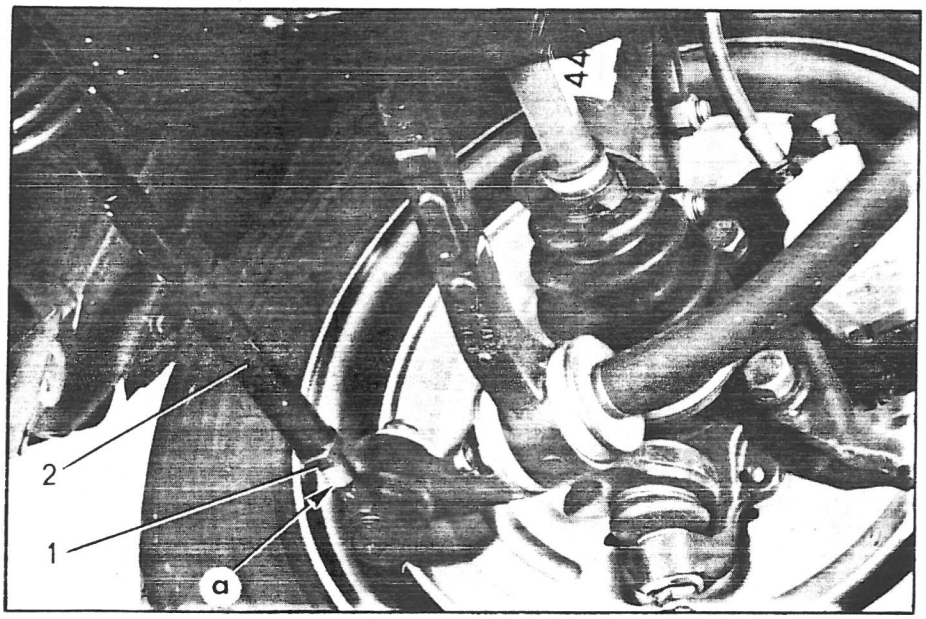

OPERATION
VD1. 420-00

CHARACTERISTICS AND SPECIAL FEATURES OF THE REAR AXLE

813-1 (I)

CHARACTERISTICS

Conditions required for check and adjustment :

With vehicle empty, in running order, 5 litres (8.8 Imp. pts) in petrol tank, check the following :
- the rear height which should be 303 ± 10 mm (11.9 ± 0.39 in) from the centre of the arm outer articulating point on body to the ground.
- the front height (see Op. VD1. 410-00).

Wheel alignment : toe-in ..... $2\ ^{+2}_{-1}$ mm

Camber (non-adjustable) : *negative* camber (*inward* tilt of the wheel at the top) : . . 1° ± 30'

SPECIAL FEATURES

Adjusting the hub bearings :

Clearance between nut and thrust washer after positioning the bearings : . . . 0.01 to 0.04 mm

Procedure :

Tighten the stub axle nut to **3 to 4 da Nm (21.5 to 29 ft. lb), allowing the drum to rotate.**

Loosen the nut.

By hand force only, bring the nut into contact with bearing thrust washer then stop the nut in that position.

Use a tool with rounded end, in order to avoid cutting the locking collar.
Support the nut during the operation.

V 42-1

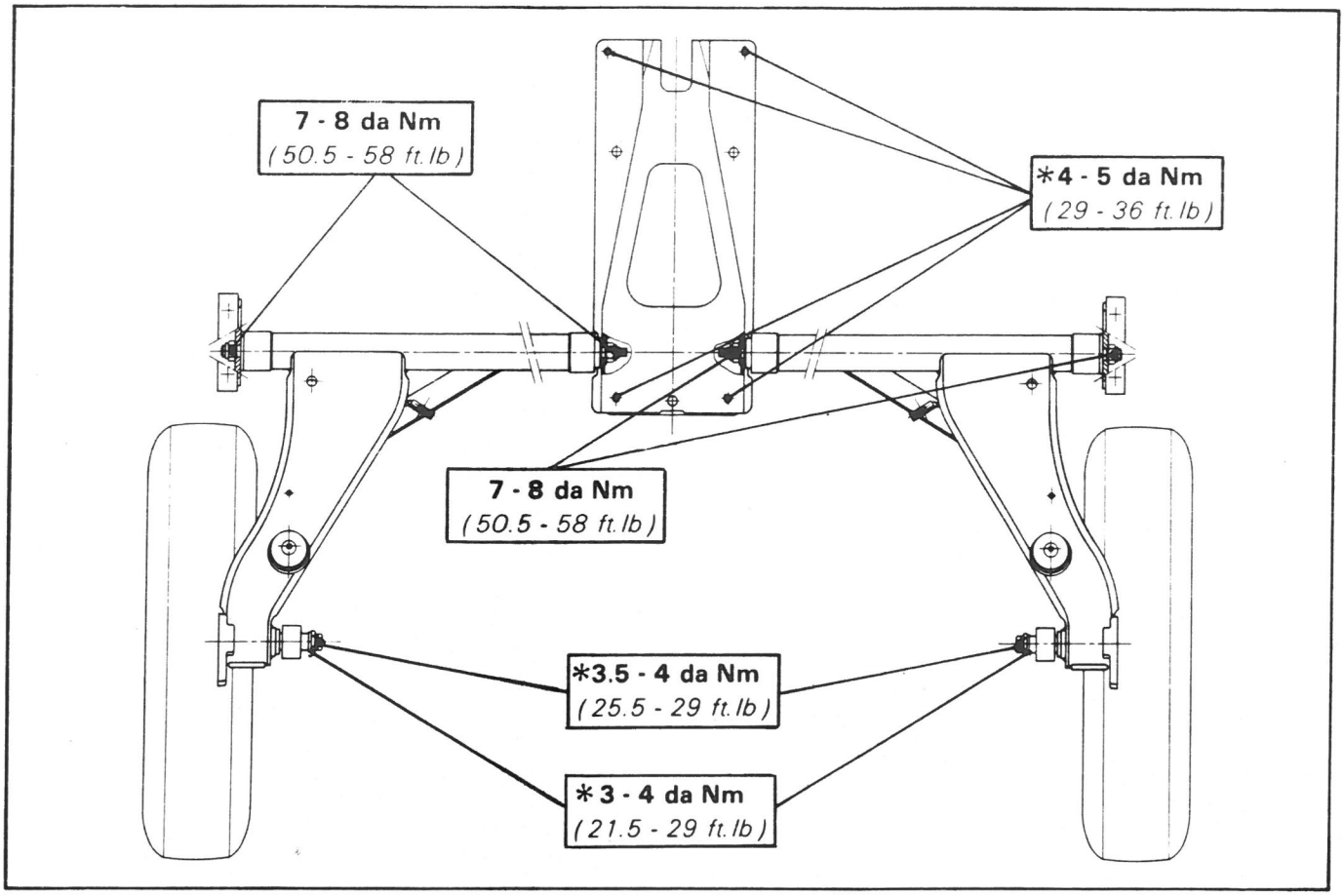
7 - 8 da Nm
(50.5 - 58 ft.lb)
*4 - 5 da Nm
(29 - 36 ft.lb)
7 - 8 da Nm
(50.5 - 58 ft.lb)
*3.5 - 4 da Nm
(25.5 - 29 ft.lb)
* 3 - 4 da Nm
(21.5 - 29 ft.lb)

V 42-2

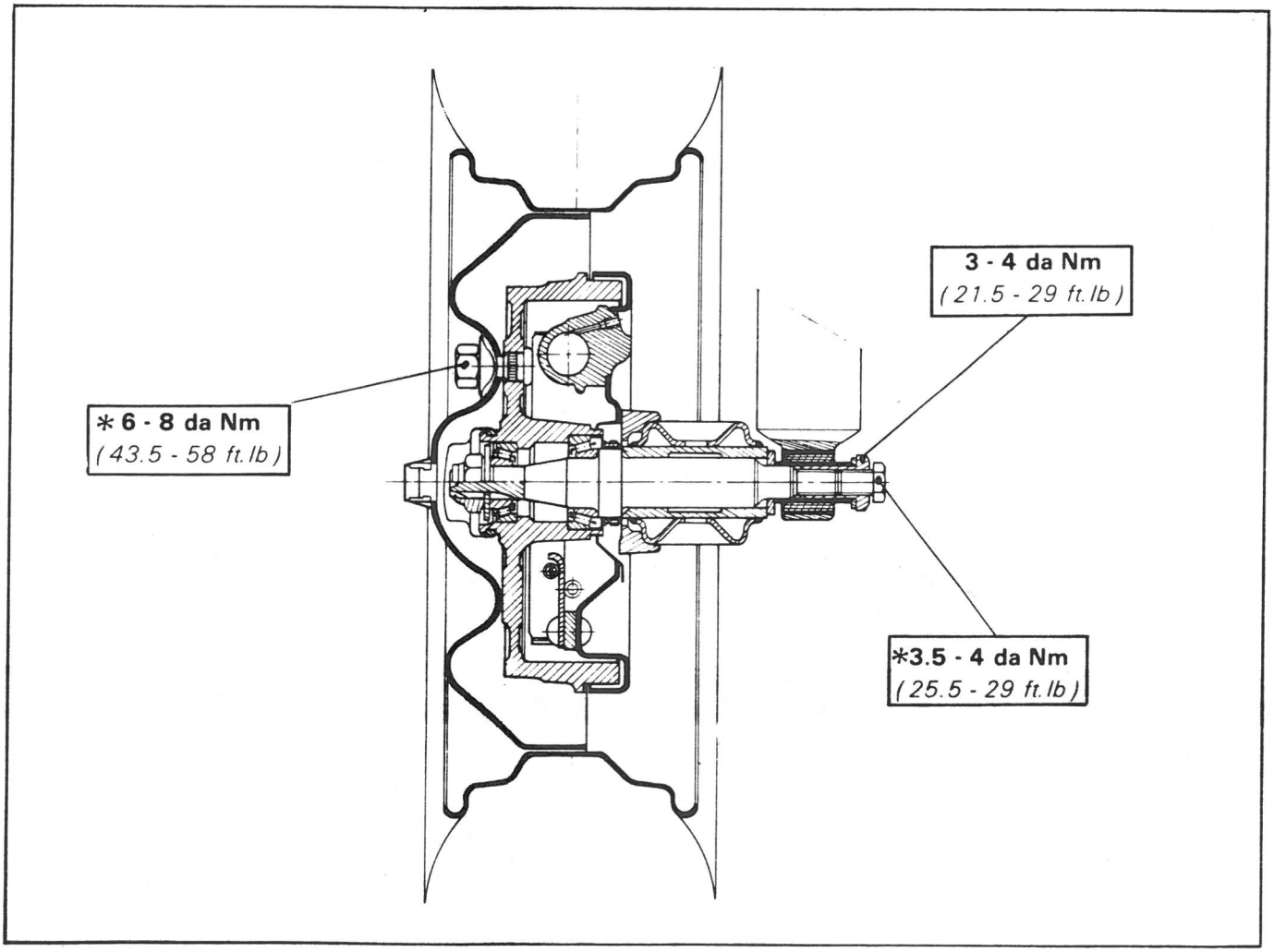
3 - 4 da Nm
(21.5 - 29 ft.lb)
* 6 - 8 da Nm
(43.5 - 58 ft.lb)
*3.5 - 4 da Nm
(25.5 - 29 ft.lb)

OPERATION
VD1. 420-0

CHECKING AND ADJUSTING THE REAR AXLE

813-1 (I)

CHECKING THE WHEEL ALIGNMENT

Conditions required for check :

With vehicle empty, in running order, 5 litres (8.8 Imp. pts) in petrol tank, check the following :
- the rear height which should be 303 ± 10 mm (11.9 ± 0.39 in) from the centre of the arm outer articulation point on body to the wheel supporting ground,
- the front height (see Op. VD1. 410-0).

The checking operation can be carried out by using a mechanical or optical equipment, with the vehicle standing on a flat level surface.

Toe-in : $2\ ^{+2}_{-1}$ mm

ADJUSTING THE WHEEL ALIGNMENT

The adjustment is obtained by shifting centre support (1) lengthwise.

Slacken each of the four screws (➡) by one full turn.

Actuate tie-rod [B] (8.0527 B) of bracket [8.0527-T] to bring centre support (1) forwards or rearwards.

A 1 mm displacement of centre support (1) entails a change of 1.5 mm, approximately, in the wheel alignment.

Tighten the screws (➡) to **4 to 5 da Nm (29 to 36 ft. lb).**

76-587

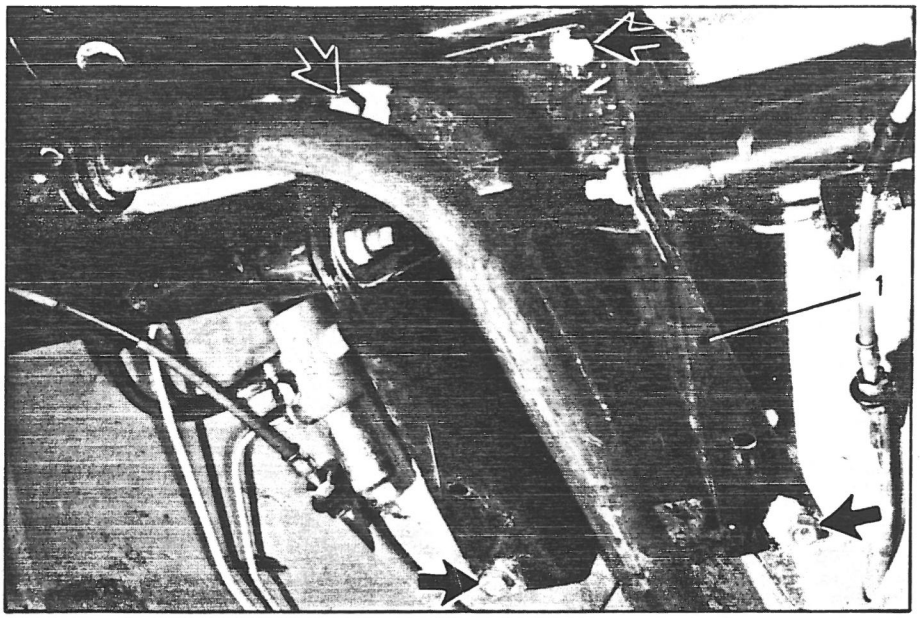

78-210

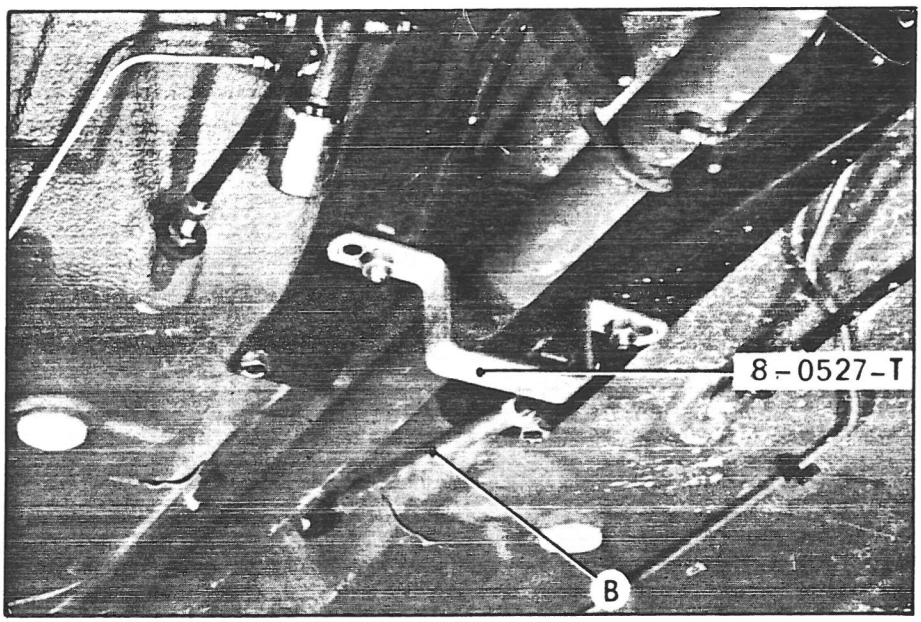

OPERATION
VD1. 430-00

CHARACTERISTICS AND SPECIAL FEATURES OF THE SUSPENSION

FRONT SUSPENSION

I. CHARACTERISTICS

« MAC-PHERSON strut » type, with independent wheels. It comprises on each side a pivot connected to a shock-absorber fitted with an offset coil spring. An anti-roll bar couples the two components.

II. SPECIAL FEATURES

Anti-roll bar dia. : ..... 23 mm (0.9 in)

On fitting :
- Grease anti-roll bar bearings (2) with KLUBER grease - Ref. R.P. 79-01-973-067.
- Impregnate attachment pads (1) with ESSO TERESSO 120 oil or SHELL TELLUS 75 oil.

Shock absorbers (non-removable) :
- Maximum out-of-true of shock-absorber rod : ..... 0.5 mm for length = 350 mm (0.02 for length = 14 in)

Springs :
Characteristics :
- Wire dia. : ..... 11.2 mm (0.44 in)
- Outside dia. : ..... 148 mm (5.8 in)
- Number of spirals : 7.5

Both sides must be equipped with springs of identical calibration (same colour mark).

Spring identification :
Under load of 237 kg (522.5 lb)
- Height below 230 mm (9 in) (1 blue mark)
- Height above 230 mm (9 in) (1 blue and red mark)

V. 43-1

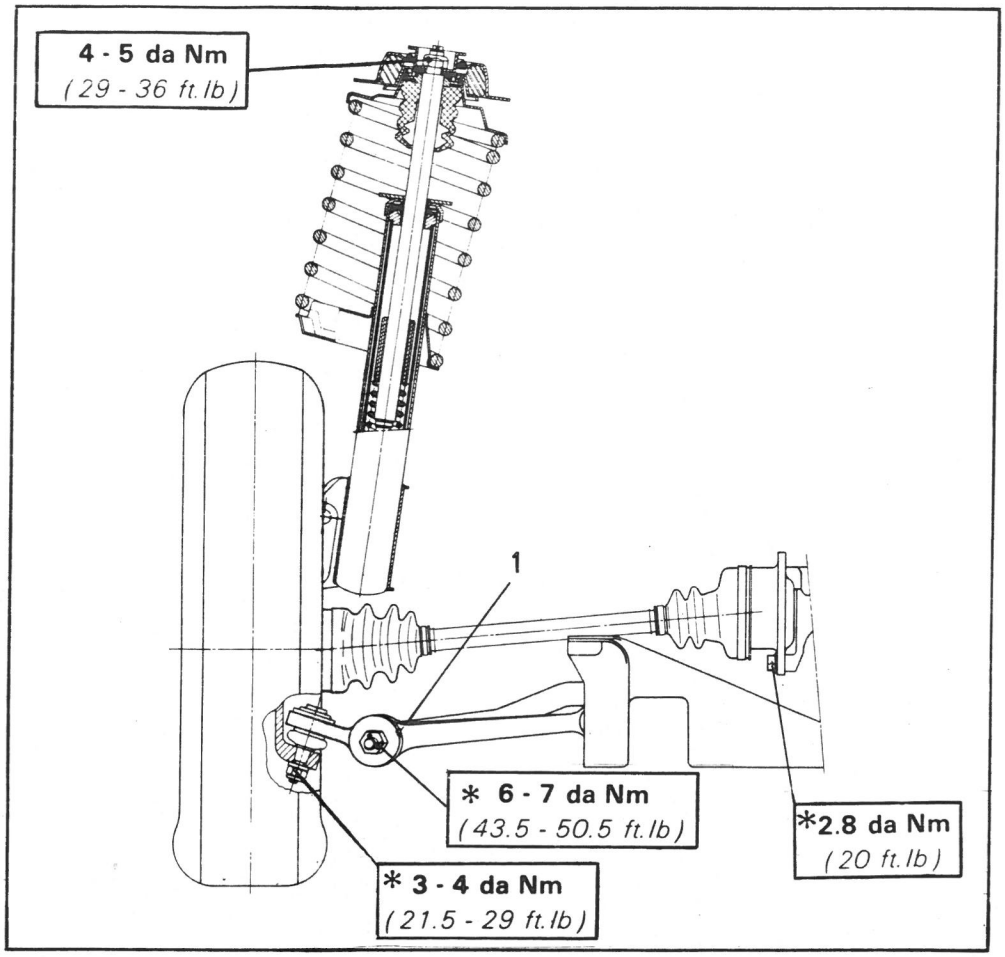
4 - 5 da Nm
(29 - 36 ft.lb)
1
* 6 - 7 da Nm
(43.5 - 50.5 ft.lb)
*2.8 da Nm
(20 ft.lb)
* 3 - 4 da Nm
(21.5 - 29 ft.lb)

V. 41-2

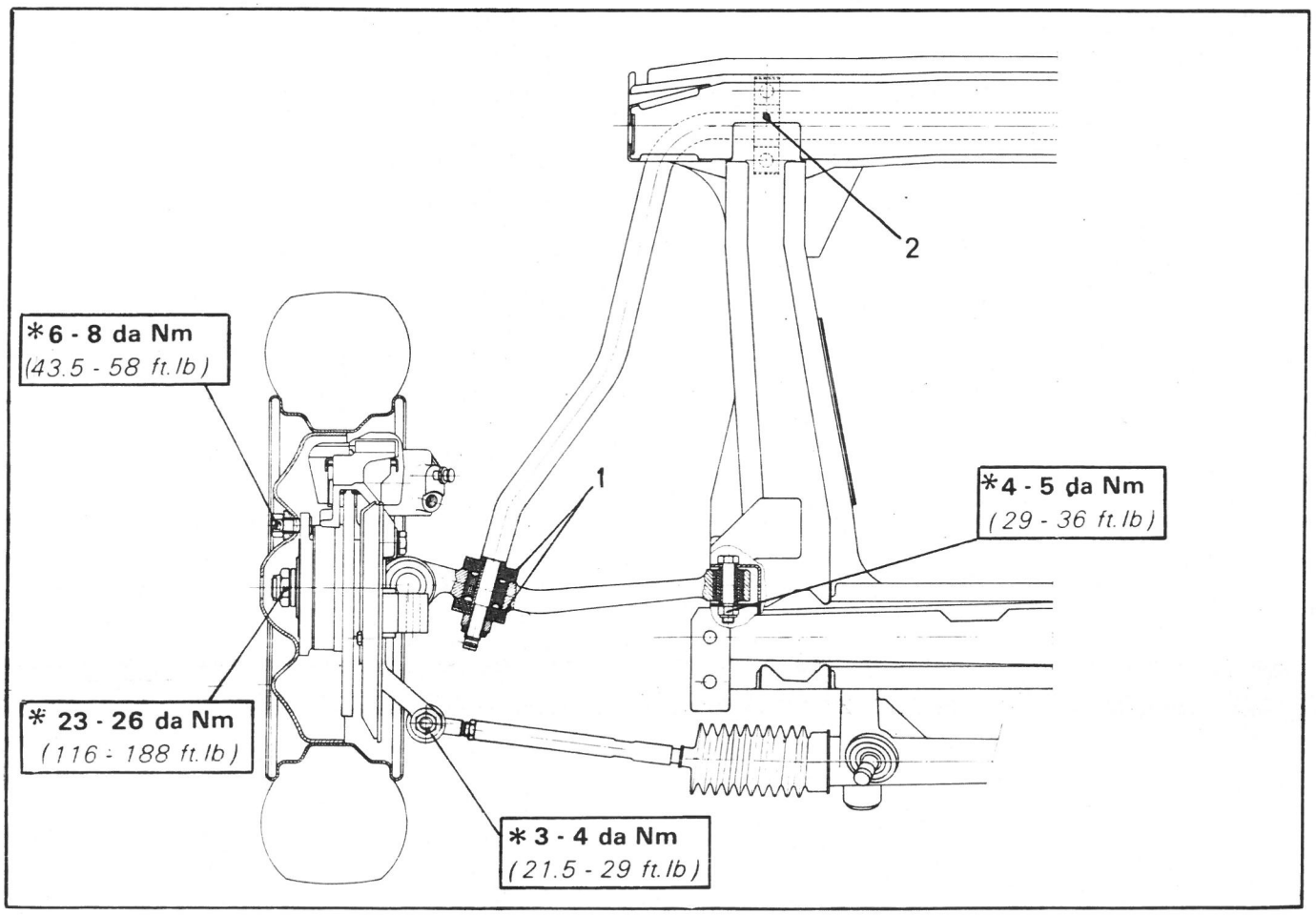
2
*6 - 8 da Nm
(43.5 - 58 ft.lb)
1
*4 - 5 da Nm
(29 - 36 ft.lb)
* 23 - 26 da Nm
(116 - 188 ft.lb)
* 3 - 4 da Nm
(21.5 - 29 ft.lb)

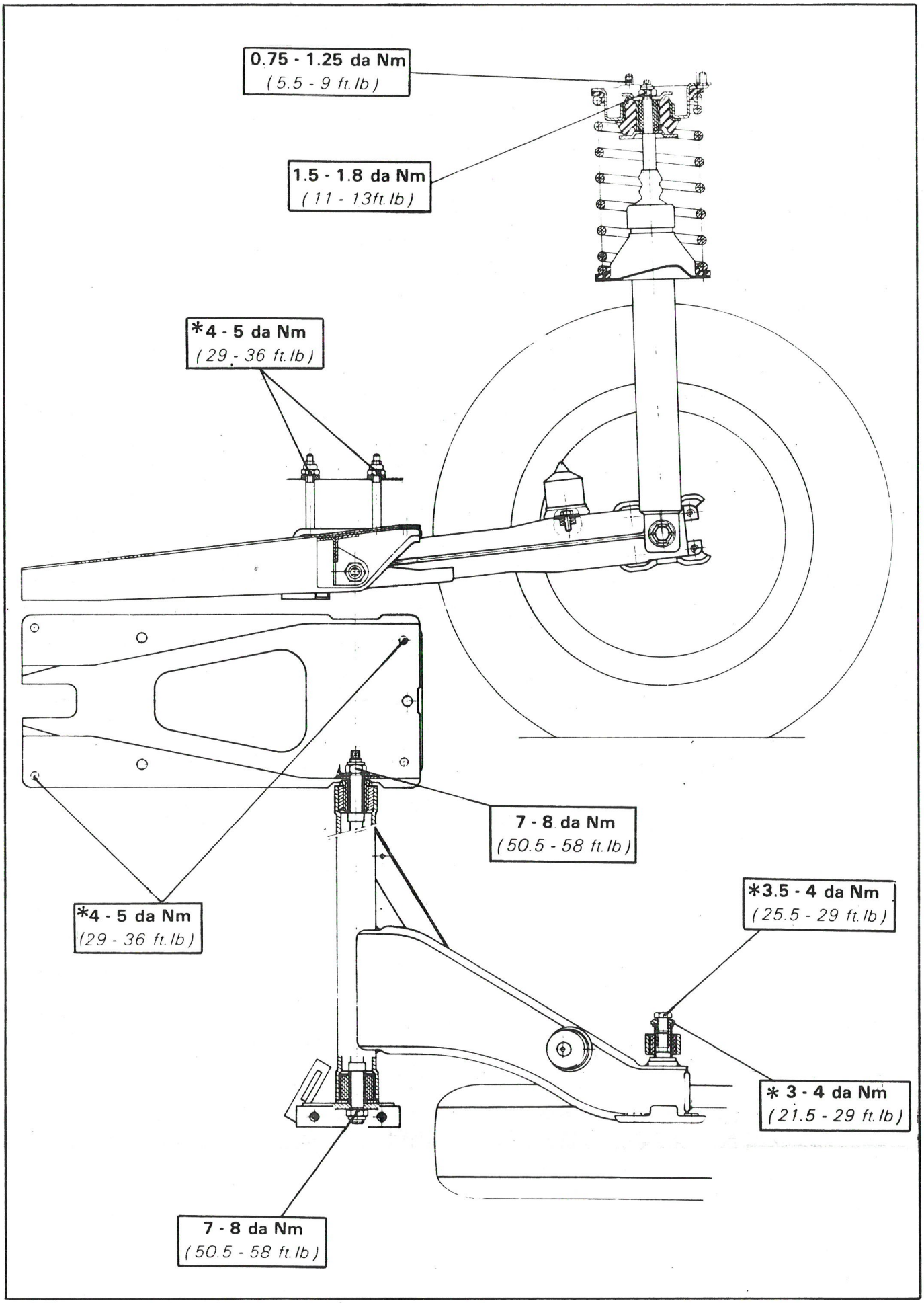
0.75 - 1.25 da Nm
(5.5 - 9 ft.lb)
1.5 - 1.8 da Nm
(11 - 13ft.lb)
*4 - 5 da Nm
(29 - 36 ft.lb)
7 - 8 da Nm
(50.5 - 58 ft.lb)
*4 - 5 da Nm
(29 - 36 ft.lb)
*3.5 - 4 da Nm
(25.5 - 29 ft.lb)
* 3 - 4 da Nm
(21.5 - 29 ft.lb)
7 - 8 da Nm
(50.5 - 58 ft.lb)

REAR SUSPENSION

I. CHARACTERISTICS

Integrated telescopic suspension, with independent wheels, comprising on each side a shock absorber and a concentric coil spring.

II. SPECIAL FEATURES

Shock absorbers (non-removable) :
- Maximum out of true of shock-absorber rod : . . . . . 0.5 for length = 350 mm (0.02 for length = 14 in)

Springs :

Characteristics	→ *9/1978*	*9/1978* →
Wire dia. :	11.2 mm (0.44 in)	11.1 mm (0.43 in)
Outside dia. :	132 mm (5.2 in)	129.1 mm (5.1 in)
Number of spirals :	8.5	7.5

Both sides must be equipped with springs of identical calibration (same colour mark)

Spring identification :

Under load of 230 kg (507 lb)	→ *9/1978*	*9/1978* →
Height below 220 mm (8.6 in)	*1 blue mark*	*1 grey mark 1 green mark*
Height above 220 mm (8.6 in)	*1 white mark*	*1 grey mark 1 yellow mark*

OPERATION
VD1. 440-00

CHARACTERISTICS AND SPECIAL FEATURES OF THE STEERING

CHARACTERISTICS

Rack and pinion steering

Wheel alignment *(toe-in)* - Adjustment by the two link rods : .... 1 ± 1 mm

Lock angle *(not adjustable)* : . { inner wheel : ..... 43° 54'
{ outer wheel : ..... 32° 34'

Turning circle :

- "between walls" : ..... 9.85 m (32 ft 3 3/4 in)
- "between kerbs" : ..... 9.29 m (30ft 5 3/4 in)

Steering ratio : 1/19.3

SPECIAL FEATURES

Number of teeth on pinion : 7

Number of teeth on rack : 33

Clearance at rack plunger *(at hardest point)* ..... 0.10 to 0.25 mm (0.004 to 0.010 in)

End float of rack pinion *(not adjustable)* : ..... 0.02 to 0.03 mm

Link rods pre-setting : ..... 304.5 mm (11.98 in) { See Op.

"Straight-ahead" position **"A"** : ..... 67 mm (2.63 in) { VD1. 442-1

Position of the steering wheel spoke in the "straight-ahead" position : ..... pointing downwards.

V 44 5

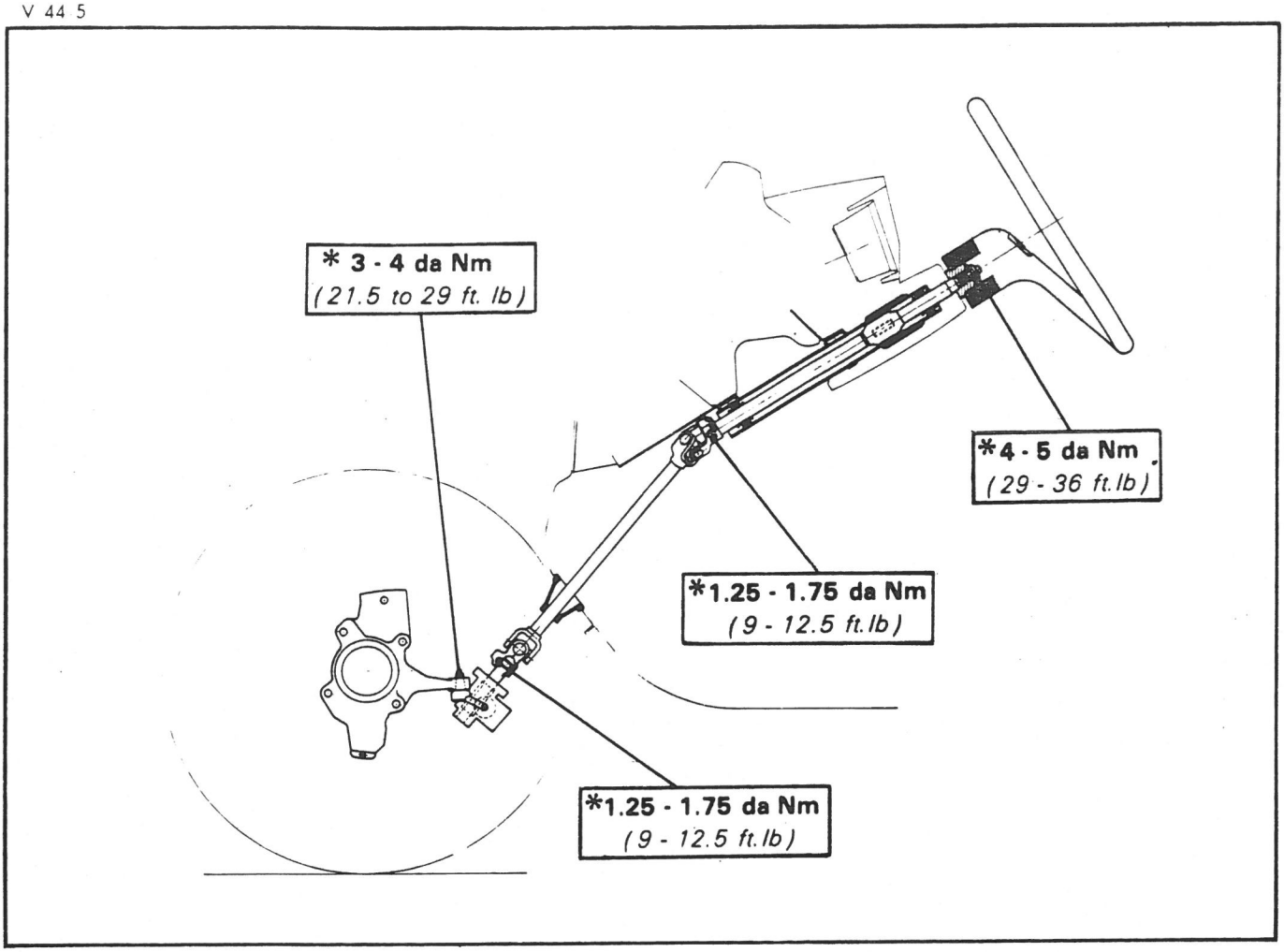

V. 44-2 a

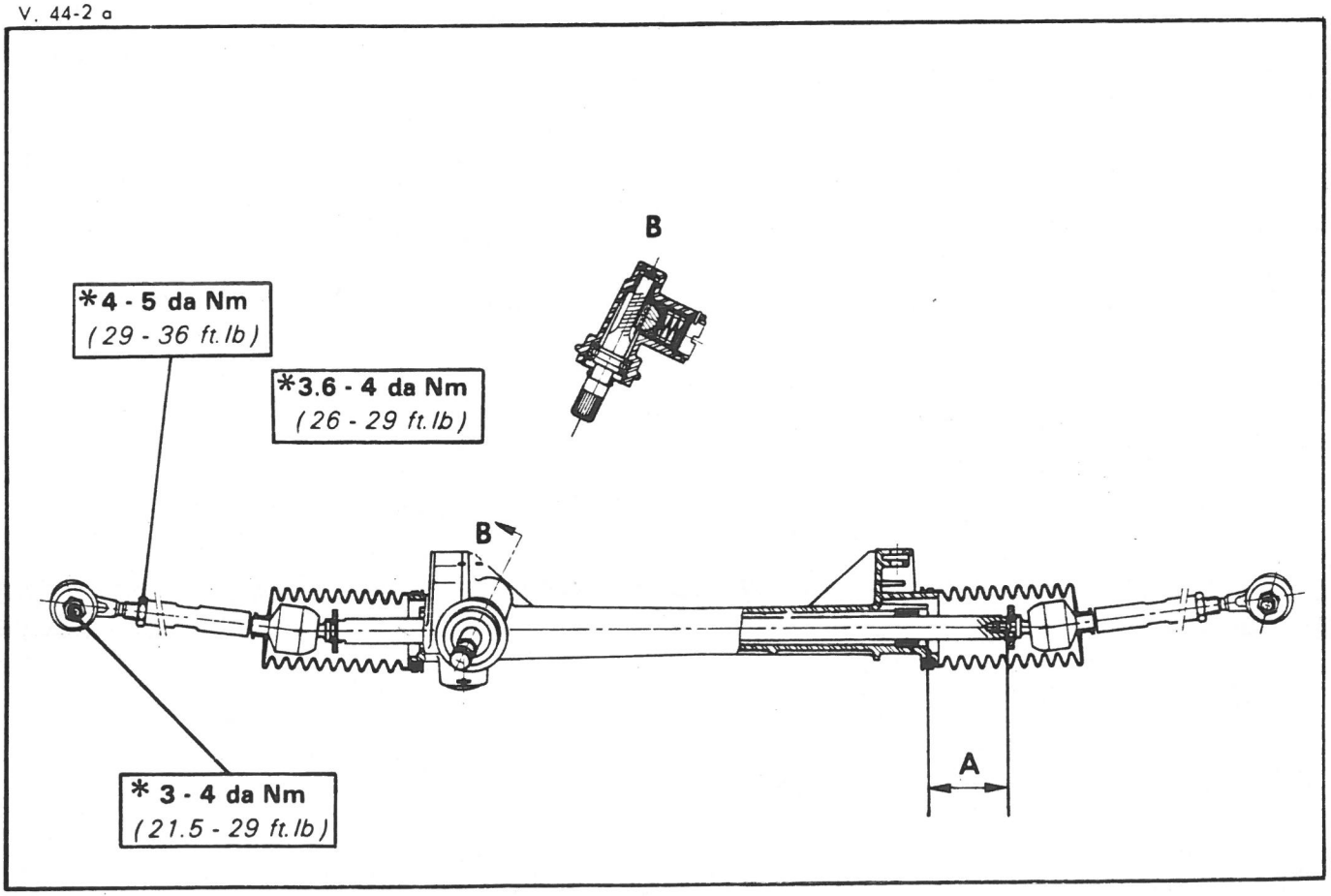

813-1 (I)

OPERATION
VD1. 450-00

CHARACTERISTICS AND SPECIAL FEATURES OF THE BRAKING SYSTEM

813-1 (1)

CHARACTERISTICS

MAIN BRAKING SYSTEM

- **Disc brakes at the front :**
- CITROËN brakes : with fixed brake units and automatic wear take-up device, (2 opposed pistons per unit).
- DBA brakes : with brake units of the "floating" type and automatic wear take-up device (1 piston per unit).
- **Drum brakes at the rear ;** brake shoes of the "floating" type, with automatic wear take-up device.
- Hydraulic control through a dual-circuit master cylinder, pressure compensator on rear brakes.
- Front brake pad wear warning lamp.

HANDBRAKE

- Lever-operated, by action on the rear wheels via cables.
  The vehicle should be brought to a stop by shifting the lever by 5 notches max.

TOTAL FRICTION AREA

- Main braking system :

- Front brakes	CITROËN :	166cm2 (25.73 sq in)
	D B A :	144 cm2 (22.32sq in)
- Rear brakes	GIRLING :	158 cm2 (24.49 sq in)
	D B A :	159 cm2 (24.64 sq in)
- Handbrake :	GIRLING :	158 cm2 (24.49 sq in)
	D B A :	159 cm2 (24.64 sq in)

Brake circuit *(key) :*

1 - Front brakes
2 - Rear brakes
3 - Master cylinder
4 - Brake fluid level warning lamp
5 - Handbrake
6 - Pressure compensator : Location (➡) of identification mark **(J)**
7 - Check-button for fluid level warning lamp.

V 45-1

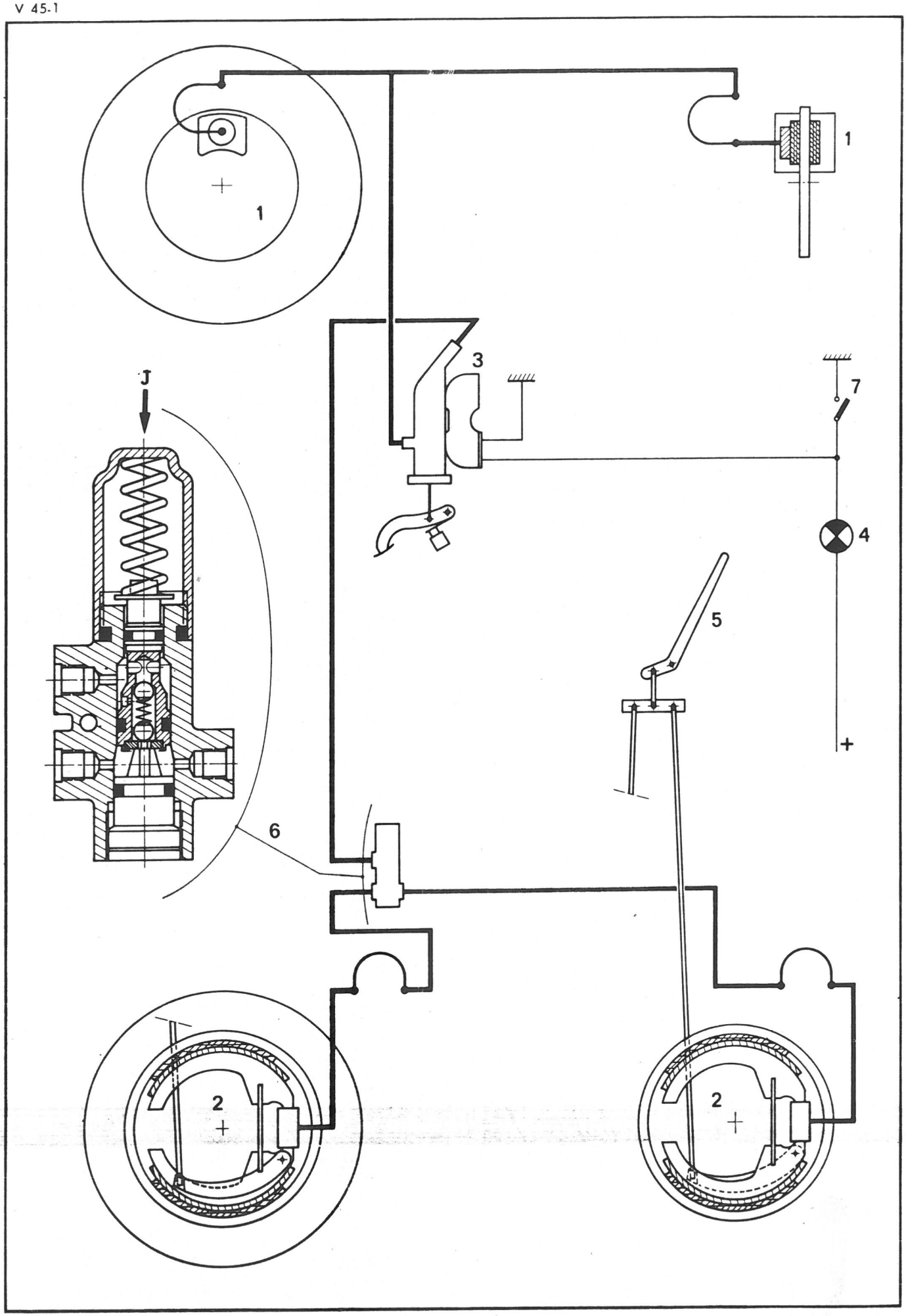

813-1 (I)

V 45-5

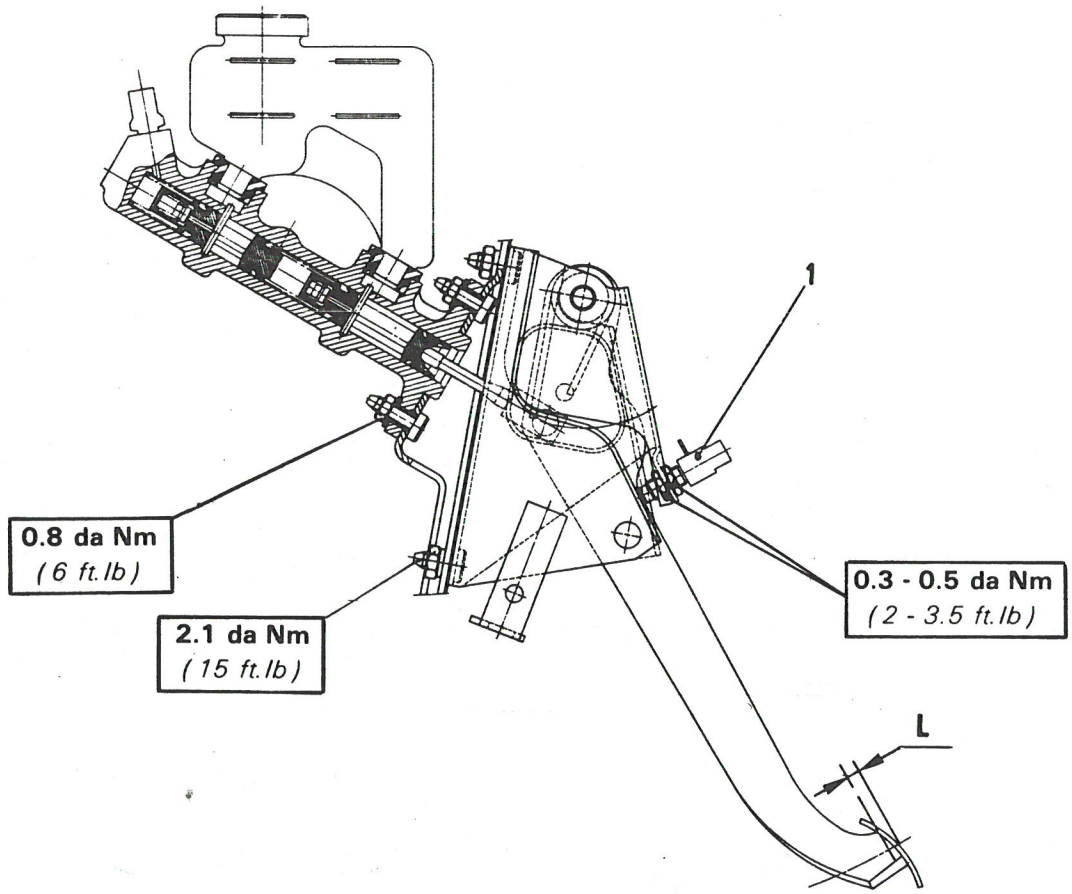
1
0.8 da Nm
(6 ft.lb)
2.1 da Nm
(15 ft.lb)
0.3 - 0.5 da Nm
(2 - 3.5 ft.lb)
L

V 41-1

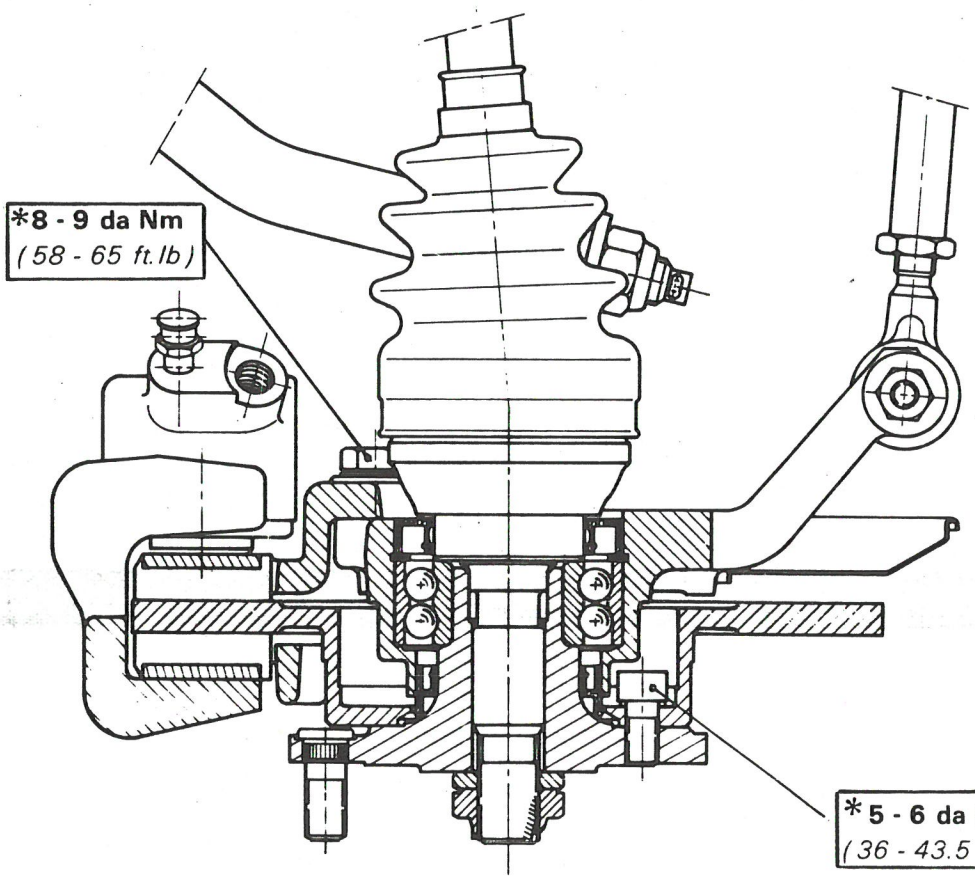
*8 - 9 da Nm
(58 - 65 ft.lb)
* 5 - 6 da Nm
(36 - 43.5 ft.lb)

SPECIAL FEATURES

- Clearance between push-rod and master cylinder : ..... 0.2 to 0.5 mm (0.007 to 0.02 in)
- As an indication : with a 0.5 mm clearance between push-rod and master cylinder : ..... L = 2.5 mm (0.098 in)

The clearance adjustment is obtained by changing the position of stoplamp switch (1).

Master cylinder :

- A dual circuit with no residual pressure valve. The front section feeds the rear brakes, the rear one feeds the front brakes.

CITROËN front brake fitting
- dia. of master cylinder : ..... 17.5 mm (0.68 in)
- stroke of master cylinder : ..... 16 + 10 mm (0.62 + 0.39 in)

D B A front brake fitting
- dia. of master cylinder : ..... 19 mm (0.75 in)
- stroke of master cylinder : ..... 15 + 11 mm (0.59 + 0.43 in)

- Reservoir capacity between min. and max. : ..... 0.140 litres (0.25 Imp pts)
- Brake fluid in conformity with N F R 126 40 S or V, or SAE J 1703 (e.g. TOTAL SY) Standards.

Front brakes :

(With CITROËN brake units) :

- Disc dia. : ..... 244.5 mm (9.62 in)
- Disc thickness : ..... 9 mm (0.35 in)
- Min. thickness after wear : ..... 7 mm (0.27 in)
- Max. run-out of disc on dia. 180 mm (7.08 in) : ..... 0.07 mm (0.03 in)
- Plane-parallel condition of disc, *the variation of thickness must not exceed :* ... 0.02 mm (0.0007 in)
- Diameter of operating pistons : ..... 45 mm (1.77 in)

(With D B A brake units) :

- Disc dia. : ..... 241 mm (9.48 in)
- Disc thickness : ..... 10 mm (0.39 in)
- Min. thickness after wear : ..... 8 mm (0.31 in)
- Max. run-out of disc on dia. 180 mm (7.08 in) : ..... 0.07 mm (0.03 in)
- Plane-parallel condition of disc, *the variation of thickness must not exceed :* ... 0.01 mm (0.0004 in)
- Diameter of operating piston : ..... 48 mm (1.88 in)

Rear brakes *(D B A fitting) :*

- Drum diameter : ..... 180 mm (7.08 in)
- Max. diameter after grinding : ..... 181 mm (7.12 in)
- Diameter of operating cylinder : *Master cylinder, dia. 19 mm (0.75 in) :* 22 mm (0.86 in)
  Master cylinder, dia. 17.5 mm (0.68 in) : 20.6 mm (0.81 in)
- Identification of shoes :
  - Front shoe (primary or "compressed") with mounting axle for automatic wear take-up.
  - Rear shoe (secondary or "stretched") with no mounting axle.
- Lining dimensions : ..... 162 × 30 mm, thickness : 5 mm (6.37 × 1.18 in, thickness : 0.19 in)
- Grade of linings : ..... F 617

Rear brakes *(GIRLING fitting) :*

- Drum diameter : ..... 180 mm (7.08 in)
- Max. diameter after grinding : ..... 181 mm (7.12 in)
- Diameter of operating cylinder : *Master cylinder, dia. 19 mm (0.75 in) :* 22 mm (0.86 in)
  Master cylinder, dia. 17.5 mm (0.68 in) : 20.6 mm (0.86 in)
- Identification of shoes :
  - Rear shoe (secondary or "stretched") with a lever for handbrake operation.
  - Front shoe (primary or "compressed") with no lever for handbrake operation.
- Lining dimensions : ..... 140 × 30 mm, thickness : 5 mm (5.5 × 1.18 in, thickness : 0.19 in)
- Grade of linings : ..... F 617

Key :

(D B A fitting) :
1- Wear take-up lever
2- Lever for handbrake operation
3- Handbrake control cable.

(GIRLING fitting) :
4- Wear take-up device
5- Lever for handbrake operation
6- Handbrake control cable.

V 45-2

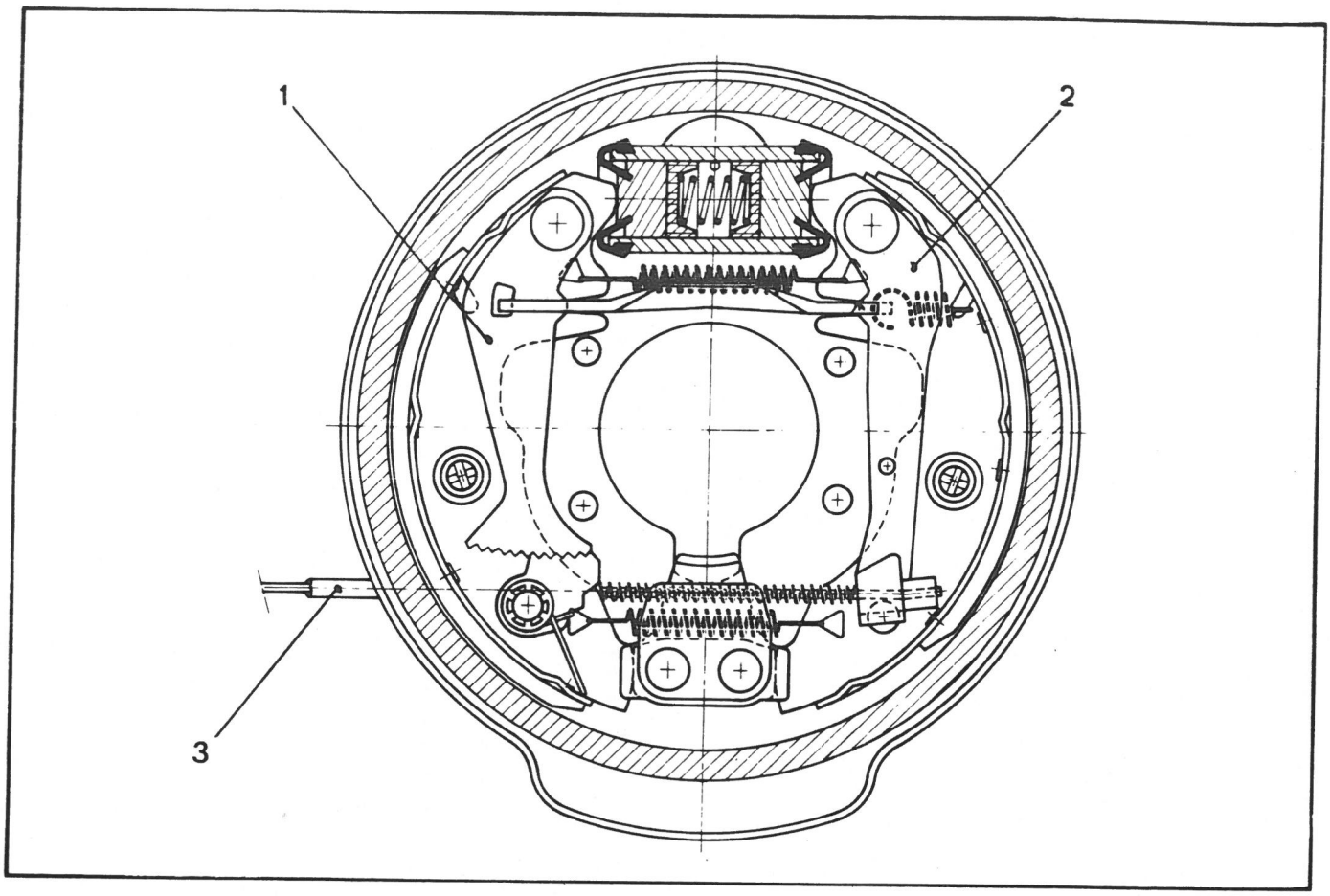

V 45-3

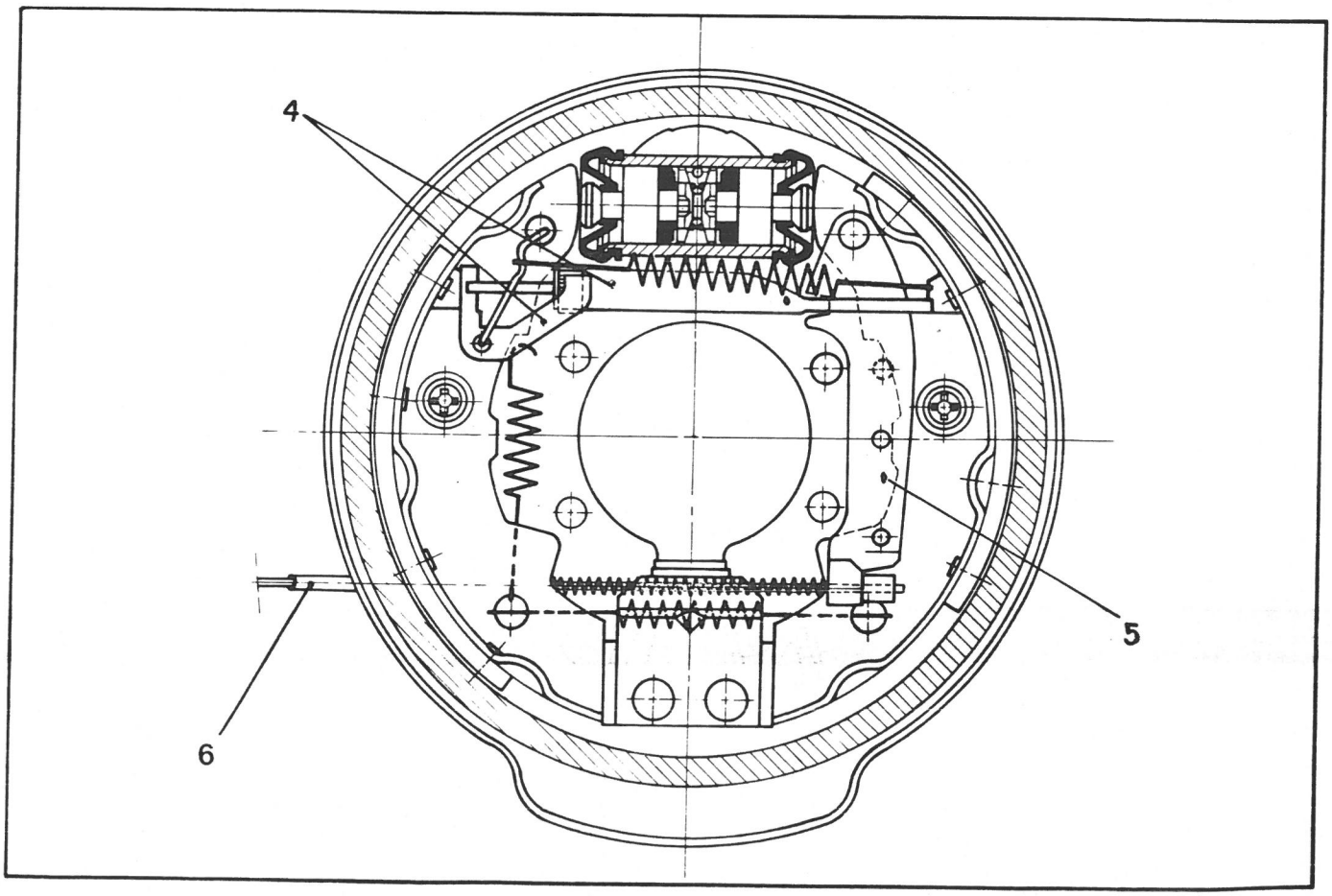

V 45.4

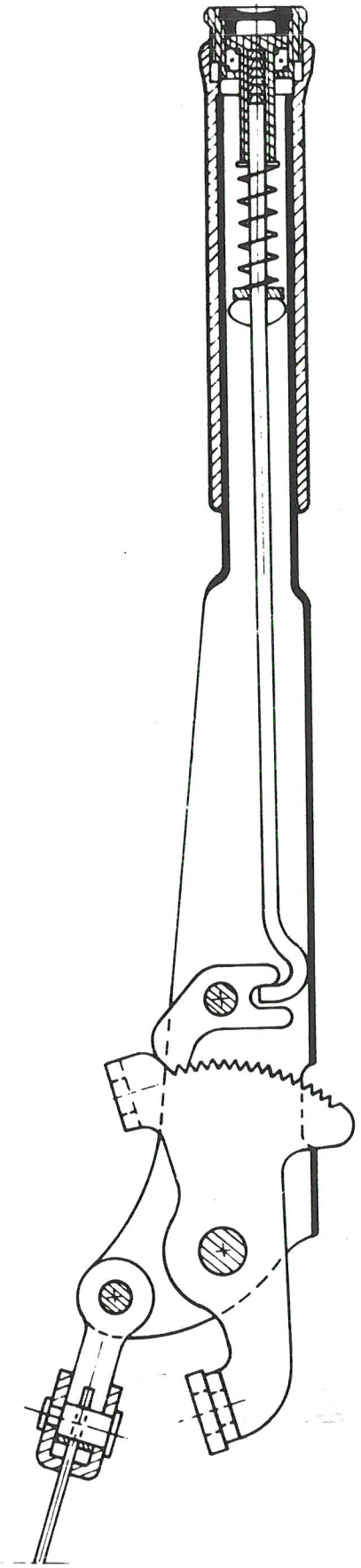

LIST OF VD2 OPERATIONS IN SECTION I

Operation number	DESCRIPTION
	CHARACTERISTICS - ADJUSTMENTS - CHECKS
VD2. 000	General characteristics
VD2. 100-00	Characteristics and special features of the engine
VD2. 112-0	Adjusting the rockers
VD2. 142-00	Characteristics of the carburettor
VD2. 142-0	Adjusting the carburettor
VD2. 210-00	Characteristics of the ignition system
VD2. 210-00 a	Transistorised ignition characteristics
VD2. 210-0	Checking and adjusting the ignition
VD2. 210-0 a	Transistorised ignition checks and adjustments
VD2. 220-0	Checking the oil pressure
VD2. 312-00	Characteristics and special features of the clutch
VD2. 330-00	Characteristics and special features of the gearbox
VD2. 330-0	Checking and adjusting the gearbox control
VD2. 372-00	Characteristics and special features of the drive shafts
VD2. 410-00	Characteristics and special features of the front axle
VD2. 410-0	Checking and adjusting the front axle
VD2. 420-00	Characteristics and special features of the rear axle
VD2. 420-0	Checking and adjusting the rear axle
VD2. 430-00	Characteristics and special features of the suspension
VD2. 440-00	Characteristics and special features of the steering
VD2. 450-00	Characteristics and special features of the braking system
VD2. 454-0	Adjusting the handbrake - Adjusting the brake limiter

OPERATION
◆ VD2. 000

GENERAL CHARACTERISTICS

P.T.O.

- GENERAL CHARACTERISTICS.

	VISA Super	VISA Super « E »	VISA Super « X »	VISA II Super « E »	4 speed VISA II Super « X ».	5 speed VISA II Super « X »
Commercial name :	VISA Super	VISA Super « E »	VISA Super « X »	VISA II L *7/1981*	VISA II Super « X ».	VISA II Super « X »
Official symbol :	VD series VB	VD series VB	VD series VE	VD series VG	VD series VH	VD series VL
Factory symbol (warranty type) :	VB	VB	VE	VG	VH	VL
Date of introduction :	October 1978→July 1980	July 1980→March 1981.	Oct. 1980→March 1981	March 1981	March 1981	July 1981
French fiscal rating :	5 CV	5 CV	7 CV	5 CV	7 CV	6 CV
Number of seats :	5	5	5	5	5	5

- GENERAL SPECIFICATIONS

Dimensions :

Front track :	A =	1.292 m	1.292 m	1.302 m	1.292 m	1.302 m	1.302 m
Rear track :	B =	1.241 m	1.241 m	1.251 m	1.241 m	1.251 m	1.251 m
Wheel base :	C =	2.420 m	2.420 m	2.426 m	2.420 m	2.426 m	2.426 m
Overall length :	D =	3.690 m	3.690 m	3.690 m	3.690 m	3.690 m	3.690 m
Overall width :	E =	1.526 m	1.526 m	1.526 m	1.535 m	1.535 m	1.535 m
Front overhang :	F =	0.675 m	0.675 m	0.669 m	0.675 m	0.669 m	0.669 m
Rear overhang :	G =	0.595 m	0.595 m	0.595 m	0.595 m	0.595 m	0.595 m
Height of vehicle empty :	H =	1.415 m	1.415 m	1.400 m	1.415 m	1.398 m	1.398 m
Ground clearance :		0.135 m	0.135 m	0.120 m	0.135 m	0.135 m	0.135 m

Weights :

Kerb weight :	800 kg	800 kg	815 kg	810 kg	815 kg	825 kg
Weight on front axle :	485 kg	485 kg	495 kg	495 kg	495 kg	565 kg
Weight on rear axle :	315 kg	315 kg	320 kg	315 kg	320 kg	320 kg
Maximum laden weight :	1210 kg	1210 kg	1230 kg	1235 kg	1230 kg	1245 kg
Maximum authorised weight on front axle :	600 kg	600 kg	620 kg	630 kg	620 kg	635 kg
Maximum authorised weight on rear axle :	610 kg	610 kg	630 kg	625 kg	630 kg	635 kg

Towing :

Maximum weight on tow bar :	40 kg	40 kg	40 kg	40 kg	40 kg	40 kg
Maximum overall weight with an unbraked trailer * of 400 kg :	1610 kg	1610 kg	1635 kg	1610 kg	1635 kg	1635 kg
Maximum overall weight with a 750 kg trailer with brakes :	1850 kg	1850 kg	1870 kg	1850 kg	1870 kg	1870 kg
Maximum starting gradient *(at Gross Train Weight)* :	11%	11%	11%	11%	11%	11%

nportant note : *Reference to trailers without brakes do not apply in U.K..*

MISCELLANEOUS INFORMATION

Capacities :

Fuel tank : 40 litres
Engine oil : TOTAL GTS 15 W 40 or GTi Route et Ville 10 W 30 (France), TOTAL « GOLD » or TOTAL 20/50 (G.B.)
- Sump capacity after overhaul : 4 speed gearbox : 5 litres
- Sump capacity after overhaul : 5 speed gearbox : 5.5 litres
- Difference between maximum and minimum on dipstick : 0.5 litre

Gearbox and engine share the same oil.
« Throwaway » exterior oil filter cartridge : PURFLUX LS 176 B
LOCKHEED DBA FC 151

Volumes :

Boot : 280 dm^3
- with rear seat folded flat : 674 dm^3

V 80-5

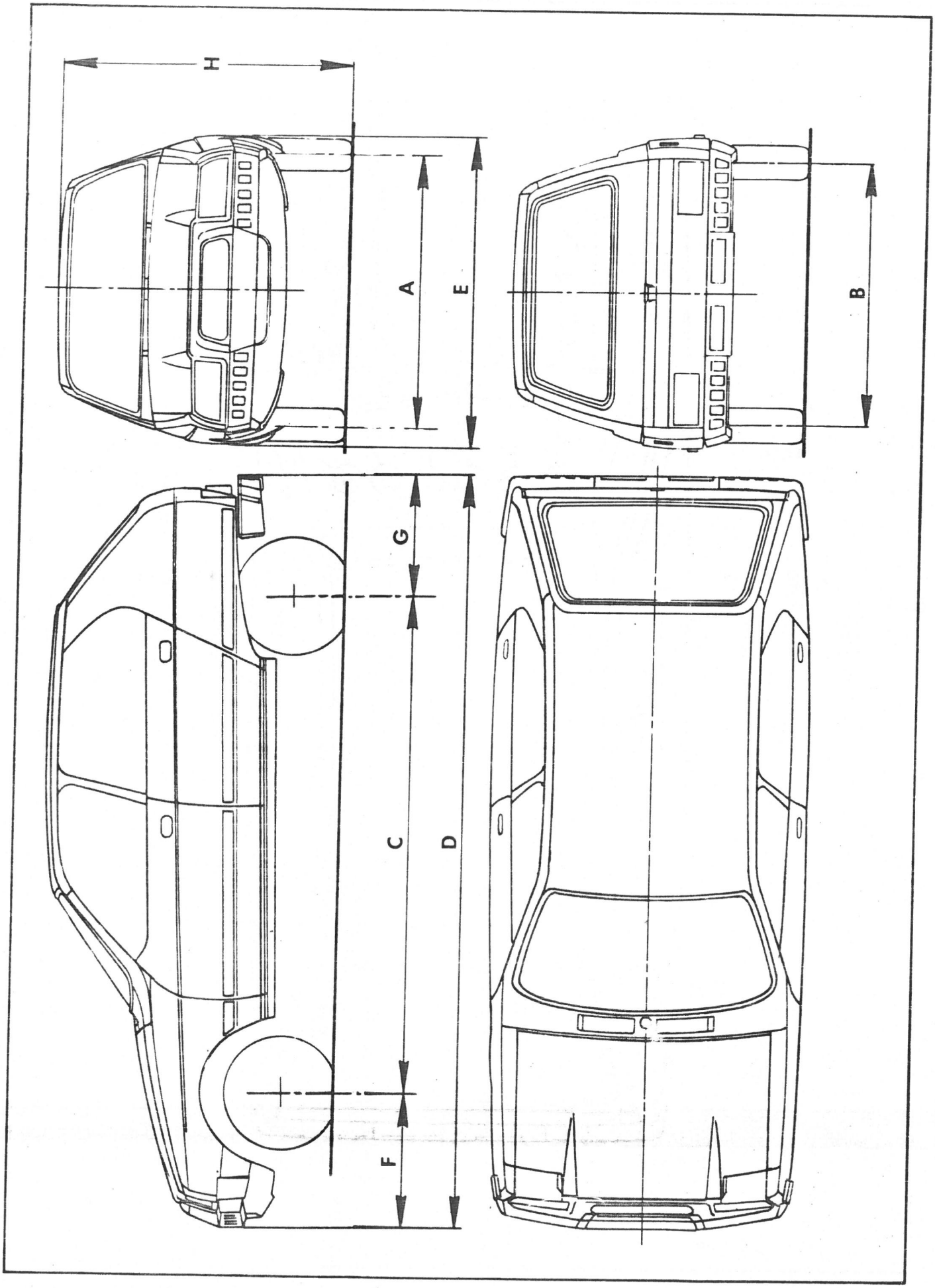

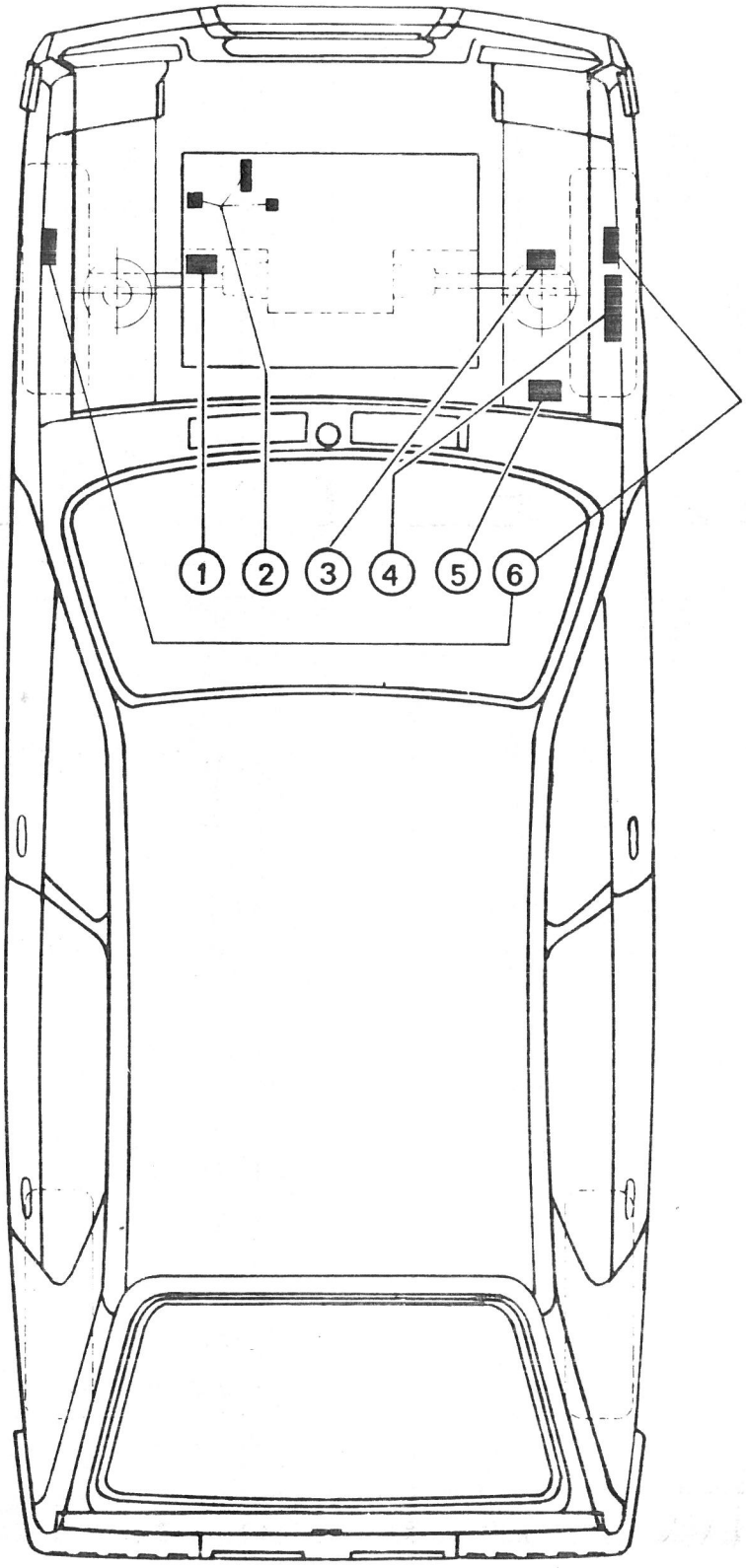
1
2
3
4
5
6

①

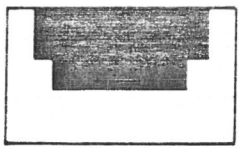

GEARBOX NUMBER

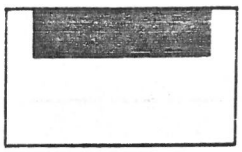

Unit number

②



Type number



Series number

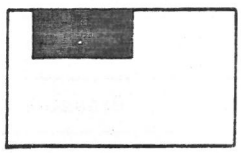

Unit number

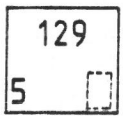

Type number

CLUTCH COVER ENGINE No. PLATES

③



ASSEMBLY LINE No.

④



CHASSIS NUMBER REPEATED

⑤

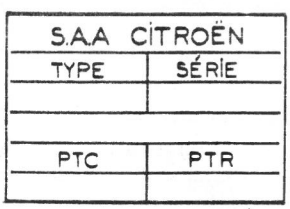

CHASSIS No. PLATE

⑤

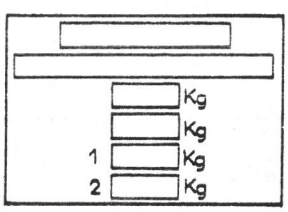

CHASSIS No.

⑥

RIGHT or LEFT HAND SIDE

○ ○ ○ ○

REPLACEMENT PARTS ORGANISATION NUMBER

VII- WHEELS AND TYRES

→ 4/1981

EQUIPMENT :

Vehicle	Standard equipment	Light alloy wheel rim option	Authorised alternative tyres
Super and Super E	5 pressed steel rims 4.50 B 13 5 tyres 145 SR 13 XZX		145 SB 13 X (M + S) 8
Super X	5 pressed steel rims 4.50 B 13 FH 5 tyres 155/70 SR 13 XZX	4 rims 4.50 B 13 1 rim, pressed steel 4.50 B 13 4 tyres 155/70 SR 13 XZX	135 R 13 X (M + S) 8
		1 tyre 135 SR 13 XZX	

TYRE PRESSURES :

Vehicle	Tyres	Pressure in bars (psi)		
		Front	Rear	Spare
Super and Super E	145 SR 13 XZX (tube type)	1.7 (24 psi)	1.9 (28 psi)	2.1 (30 psi)
Super X	155/70 SR 13 XZX TUBELESS	1.8 (26 psi)	2 (29 psi)	2.2 (32 psi)

4/1981 → 7/1981

EQUIPMENT

Vehicle	Standard equipment	Light alloy wheel rim option	Authorised alternative tyres
Super E	5 pressed steel rims, 9 holes with plastic wheel trims 4.50 B 13, dishing = 35 mm 5 tyres 145 SR 13 XZX Tubeless	4 rims 4.50 B 13 dishing = 30 mm 1 pressed steel rim with spacers 4.50 B 13, dishing = 35 mm 5 tyres 145 SR 13 XZX Tubeless	145 R 13 X (M + S) 8
Super X	5 pressed steel rims, 9 holes with plastic wheel trims 4.50 B 13, dishing = 30 mm 4 tyres 155/70 SR 13 XZX Tubeless 1 tyre 135 SR 13 XZX Tubeless	4 special TRX rims 1 pressed steel rim with spacers 4.50 B 13, dishing = 35 mm 4 tyres 160/65 R 340 TRX Tubeless 1 tyre 135 SR 13 XZX Tubeless	135 R 13 X (M + S) 8

TYRE PRESSURES :

Vehicle	TUBELESS Tyres	Pressure in bars (psi)		
		Front	Rear	Spare
Super E	145 SR 13 XZX	1.8 (26 psi)	2 (29 psi)	2.2 (32 psi)
	145 R 13 X (M + S) 8	1.8 (26psi)	2 (29 psi)	2.2 (32 psi)
Super X	155/70 SR 13 XZX 135 SR 13 XZX	1.8 (26 psi)	2 (29 psi)	2.3* (34 psi)
	160/65 R 340 TRX 135 SR 13 XZX	1.7 (24 psi)	1.7 (24 psi)	2.5 * (37 psi)
	135 R 13 X (M + S) 8	1.8 (26 psi)	2 (29 psi)	2.2 (32 psi)

Note : * Pressure of the spare wheel in use.

7/1981 →

EQUIPMENT :

Vehicle	Standard equipment	Light alloy wheel rim option	Authorised alternative tyres
VISA II L	5 pressed steel rims with plastic hub cap 4.50 B 13 FH, dishing = 35 mm 5 tyres 145 SR 13 XZX Tubeless		
VISA II Super E	4 pressed steel rims, special design 4.50 B 13 FH (dishing = 35 mm) 1 pressed steel rim, 8 holes with plastic hub cap 4.50 B 13 FH (dishing = 35 mm) 5 tyres 145 SR 13 XZX Tubeless	4 rims 4.50 B 13 (dishing = 30 mm) 1 pressed steel rim with spacers 4.50 B 13 (dishing = 35 mm) 5 tyres 145 SR 13 XZX Tubeless	145 R 13 X (M + S) 8
VISA II Super X	4 pressed steel rims, special design for tyres TRX 120 TR 340 FH (dishing = 30 mm) 1 pressed steel rim, 8 holes with plastic hub cap 4.50 B 13 FH (dishing = 35 mm) 4 tyres 160/65 R 340 TRX Tubeless 1 tyre 135 SR 13 XZX Tubeless	4 special rims, TRX 1 pressed steel rim with spacers 4.50 B 13 (dishing = 35 mm) 4 tyres 160/65 R 340 TRX Tubeless 1 tyre 135 SR 13 XZX Tubeless	135 R 13 X (M + S) 8

TYRE PRESSURES :

Vehicle	Tubeless Tyres	Pressure in bars (psi)		
		Front	Rear	Spare
VISA II L	145 SR 13 XZX	1.8 (26 psi)	2.0 (29 psi)	2.2 (32 psi)
	145 R 13 X (M + S) 8	1.8 (26 psi)	2.0 (29 psi)	2.2 (32 psi)
VISA II Super E	145 SR 13 XZX	1.8 (26 psi)	2.0 (29 psi)	2.2 (32 psi)
	145 R 13 X (M + S) 8	1.8 (26 psi)	2.0 (29 psi)	2.2 (32 psi)
VISA II Super X	160/65 R 340 TRX 135 SR 13 XZX	1.7 (24 psi)	1.7 (24 psi)	2.5* (36 psi)
	135 R 13 X (M + S) 8	1.8 (26 psi)	2.0 (29 psi)	2.2 (32 psi)

Caution : * Pressure of the spare wheel in use.

OPERATION
VD2. 100-00

CHARACTERISTICS AND SPECIAL FEATURES OF THE ENGINE

I- GENERAL CHARACTERISTICS

♦ Engine :	SUPER	SUPER "E"	VISA II { L / Super «E»	SUPER « X » and VISA II Super « X »
- Type *(on engine plate)*	XW 3, Type 109/5	XW 5, Type 109/5	XW 7, Type 109/5 E	XZ 5 X, Type 129/5
- French fiscal rating	5 CV		5 CV	7 CV (4 speed) 6 CV (5 speed)
- Cubic capacity :	1124 cc		1124 cc	1219 cc
- Number of cylinders :	4 (in line)		4 (in line)	4 (in line)
- Bore :	72 mm		72 mm	75 mm
- Stroke :	69 mm		69 mm	69 mm
- Compression ratio :	9.2/1		10.2/1	9.3/1
- Maximum power:	ISO 41 kW (57 bhp DIN) at 6250 rpm		ISO 36 kW (50 bhp DIN) at 5500 rpm	ISO 46 kW (64 bhp DIN) at 6000 rpm
- Maximum torque	7.9 m.daN (ISO) (57 ft.lbs) at 3000 rpm		8.1 m.daN ISO (58.6 ft.lbs) at 2500 rpm	9.0 m.daN (ISO) (65 ft.lbs) at 3000 rpm

Cooling system : Water-cooled (anti-freeze all the year round).

Lubrication : Pressure fed from « gear-type » pump which is gear driven from the end of the crankshaft. Common circuit for engine, gearbox and differential.

Exterior « throw-away » oil filter cartridge.
- PURFLUX LS 176 B
- LOCKHEED-DBA FC 151.

♦ **Fuel supply :** Mechanical fuel pump driven by an eccentric on the camshaft.

SOLEX carburettor :

Vehicle	SUPER	SUPER "E"	SUPER "X"	VISA II { L / Super «E»	VISA II SUPER « X»
TYPE	32 PBIS A 7	32 PBIS A 11	32 PBIS A 11	32 PBIS A 12	32 PBIS A 11
Ident. mark	A 101-1	CIT 278-1	CIT 240	CIT 230	CIT 240

Dry-type air filter cartridge.

Grade of petrol to be used : R 99 Octane (U.K. : 4-star - France : *Super grade*).

Ignition :
Distributor is horizontally fitted to, and driven by the camshaft (Make : DUCELLIER or PARIS-RHONE).
♦ **On VISA II SUPER « E » :** Electronic ignition with magnetic triggering.

Spark plugs (16 mm A/F) conical seat without gaskets.
Tightening torque (essential) : 1 to 1.3 m.daN (7.25 to 9.5 ft.lbs) *(use the pre-set torque handle OUT 128 301-T and plug spanner OUT 128 302 T).*

Timing :
Overhead camshaft, housed in the cylinder head.

V. 10-3

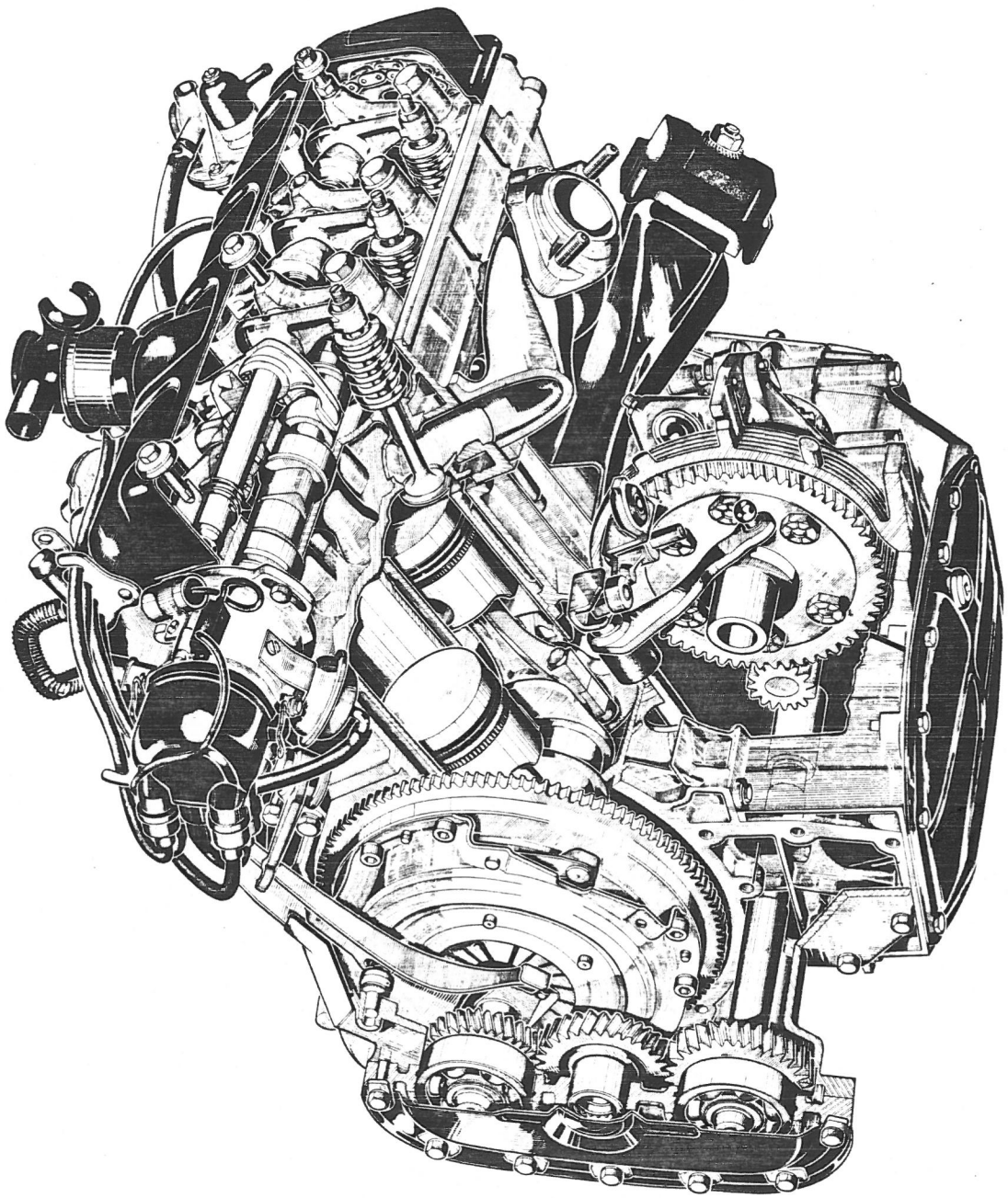

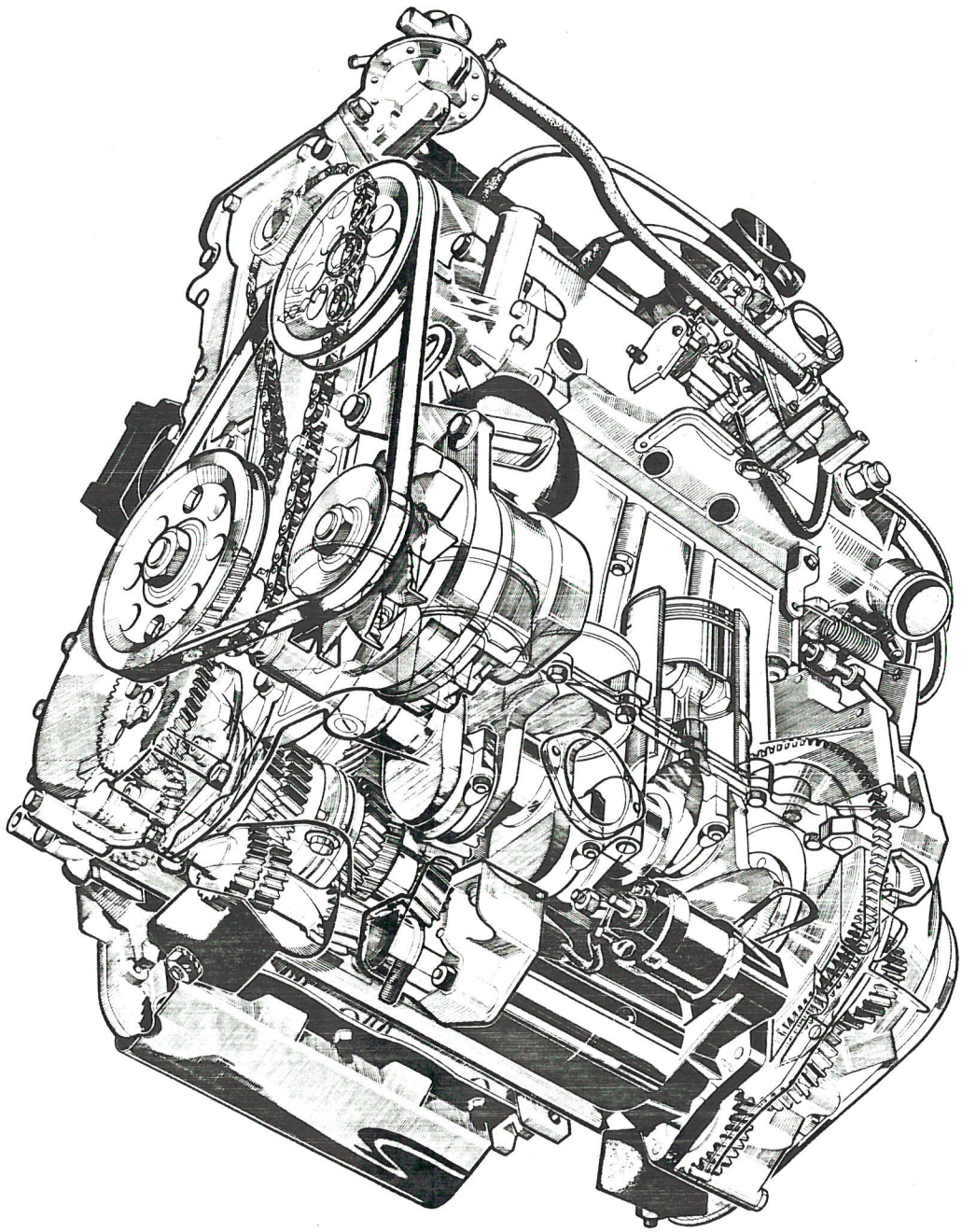

II- SPECIAL FEATURES

Crankcase :

Oiltightness of joint faces with LOCTITE FORMETANCH

Crankshaft - Connecting rods :

- End float of crankshaft : ..... 0.07 to 0.27 mm (.003 to .010 in)
- Thickness of thrust washer half rings : ..... 2.40 - 2.45 - 2.50 mm (0.094 - 0.096 - 0.098 in)
- Set of 10 half-shells for main-bearings :

Two classes { Production : for crankshaft journals : ..... dia. = $49.98\ ^{+0}_{-0.016}$ mm ($1.96\ ^{+0}_{-.0006}$ in)

Repair : for crankshaft journals : ..... dia. $49.68\ ^{+0}_{-0.016}$ mm ($1.95\ ^{+0}_{-.0006}$ in)

- Bore of small-end bushes : ..... $19.463\ ^{+0.013}_{+0}$ mm ($0.766\ ^{+.0005}_{+0}$ in)
- Bore of big-end bushes : ..... $48.655\ ^{+0.016}_{+0}$ mm ($1.91\ ^{+.0006}_{+0}$ in)
- Set of 8 half-shells for crankpins :

Two classes { Production : for crankpins : ..... dia. $45\ ^{-0.009}_{-0.025}$ mm ($1.77\ ^{-.0003}_{-.0010}$ in)

Repair : for crankpins : ..... dia. $44.70\ ^{-0.025}_{-0.025}$ mm ($1.76\ ^{-.0003}_{-.0010}$ in)

Flywheel :

Secured to crankshaft flange by six screws and three centring studs.

The screws threads must, without fail, be smeared with LOCTITE FRENETANCH.

Number of teeth on starter ring : 117

♦ **Cylinders :**

Only one class of pistons and liners are sold by the Replacement Parts Department.

For engines up to and including number 44 200 these are four thicknesses of liner base gaskets : Blue mark : 0.07 to 0.105 - White mark : 0.085 to 0.120 - Red mark : 0.105 to 0.140 - Yellow mark : 0.130 to 0.165. **Protrusion of liner (stand-proud) : 0.11 mm - 0.18 mm (.004 - .007 in)**

From engine number 44 201 : the gas tightness of the liner base is ensured by rubber O-ring seals. The cylinder block is machined in manufacture to accept these O-ring seals.

The liner stand-proud is not adjustable and must be established between 0.10 mm and 0.17 mm (.004 and .007 in) measured without the seal in place.

The difference between the stand-proud of consecutive liners in the block, must not exceed 0.04 mm (.0015 in).

Pistons - piston rings :

The gudgeon pis is a floating fit in the piston, and an interference fit in the connecting rod.

Pistons being stamped with an arrow on the crown should be fitted with the arrow facing the timing case end of the cylinder block.

Piston rings : The identification mark (or manufacturer's name) must face the top of the piston.

Cylinder head tightening :

Make sure the stamped mark <10-9> is present on the bolt heads, if not, ensure bolts are replaced with suitably marked bolts obtained from Replacement Parts Department.
For the fitting or not of washers and marked nuts see Technical Bulletin No. 7 VD2).

- With faces and threads lubricated with oil, carry out a pre-tightening to **4 m.daN (29 ft.lbs)**. See page 8 for tightening sequence.

♦ **Final tightening : 6.5 to 7 m.daN (47 to 50.5 ft.lbs) (⟶ 44 200)**
7.5 to 7.7 m.daN (54.5 to 55.5 ft.lbs) (44 201 ⟶)

Re-tightening, after removal of cylinder head or fitting reconditioned engine : Run the engine until the electric fan cuts in and then allow to cool for at least two hours. Proceed bolt by bolt, slackening and then re-tightening :

♦ **to 6.5 to 7 m.daN (47 to 50.5 ft.lbs) (⟶ 44200)**
to 7.5 to 7.7 m.daN (54.5 to 55.5 ft.lbs) (44 201 ⟶) observe the tightening sequence

Valves	Angle	Head dia mm	Head dia in	Stem dia. below head mm	Stem dia. below head in	Length mm	Length in
Inlet	120°	36.8	1.45	$8\ ^{-0.010}_{-.0035}$	$.315\ ^{-.0004}_{-.0014}$	113.41± 0.22	4.46 ± .008
Exhaust	90°	29.3	1.15	$8\ ^{-0.023}_{-0.038}$	$.315\ ^{-.0009}_{-.0015}$	113.56 ± 0.45	4.47 ± .018

Valve springs :

One type of valve spring is used for both exhaust and inlet - wire dia. : 4.3 mm (0.17 in).

Compressed length	Load
41 mm (1.61 in)	26 kg (57 lbs)
30 mm (1.18 in)	77 kg (170 lbs)

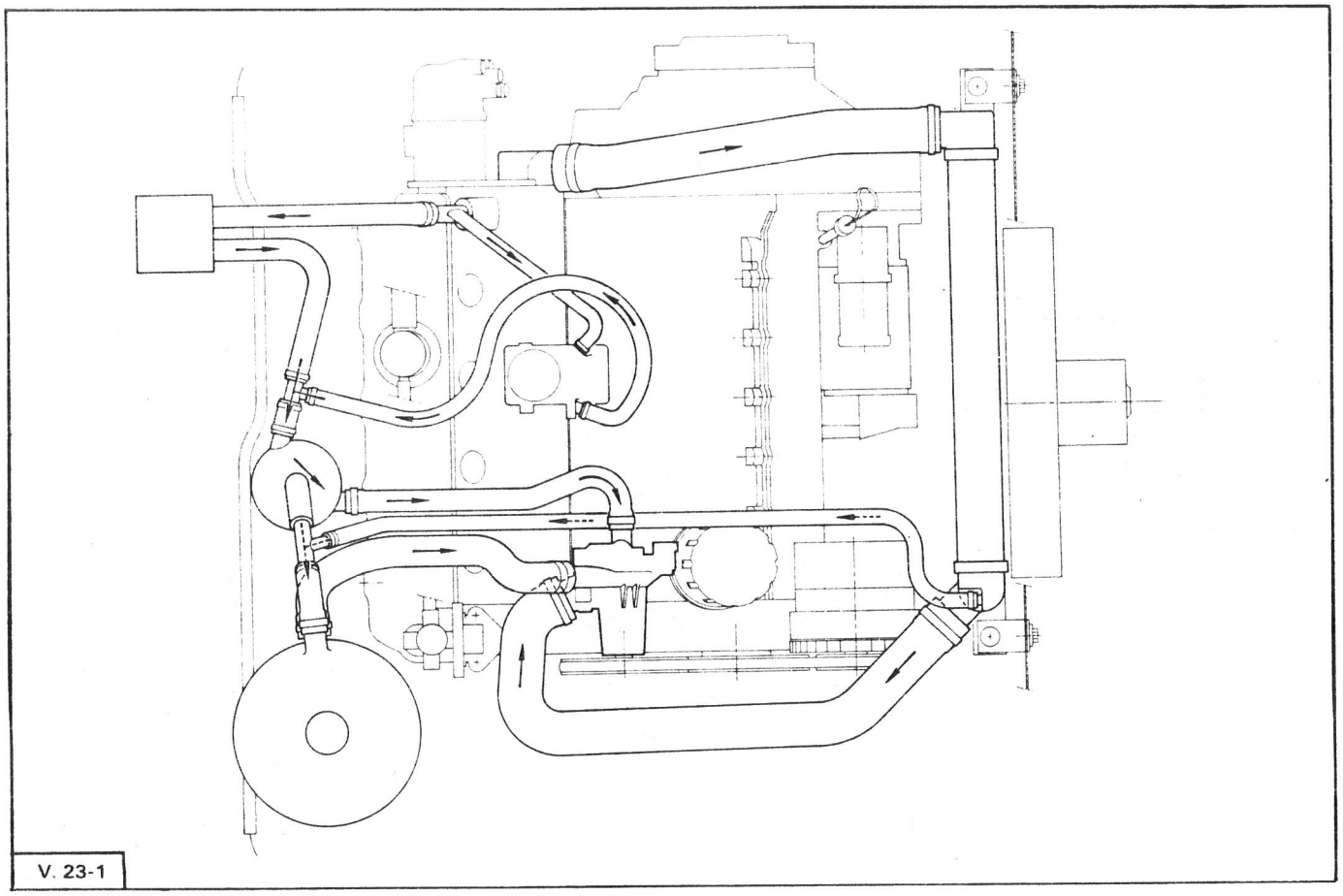

V. 23-1

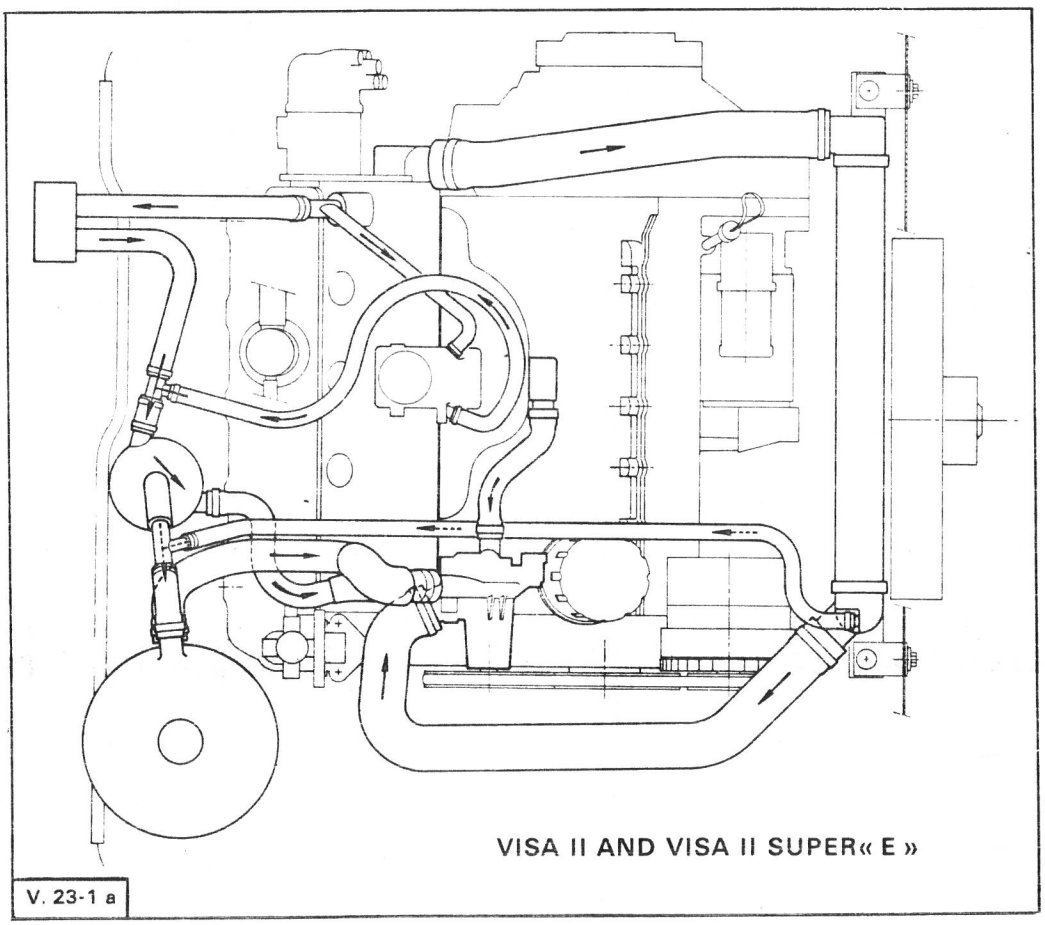

VISA II AND VISA II SUPER« E »

V. 23-1 a

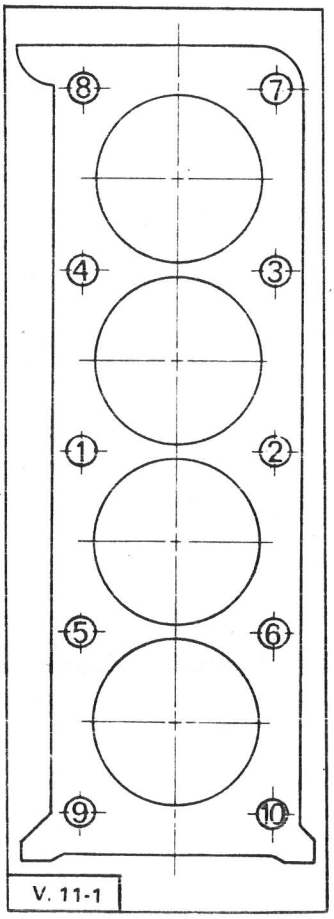

V. 11-1

TIGHTENING TORQUES

♦ **a) Engine suspension :**

Engine/transmission unit with gearbox :	Tightening torques in m.daN (Ft.lbs) **4 speed**	**5 speed**
Securing nut, L.H. bearer on support :	4.5 to 5 (32.5 to 36)	3 to 4 (21.5 to 29)
Fixing bolt for front bearer bracket on clutch housing:	1.5 to 1.75 (11 to 12.5)	2 to 2.5 (14.5 to 18)
Fixing bolt for rear bearer bracket on clutch housing :	2.5 to 3 (18 to 21.5)	0.5 to 1 (3 to 7)
Fixing bolt for rear bearer bracket on clutch housing :	4 to 5 (29 to 36)	4 to 5 (29 to 36)
R.H. bearer mounting bracket :	2 to 2.5 (14.5 to 18)	2 to 2.5 (14.5 to 18)

b) Crankshaft and flywheel assembly : **m.daN (Ft.lbs)**

Connecting rod cap bolts : ..... 3.5 to 4 (21. to 29)
Flywheel securing bolts : ..... 6.5 to 7 (47 to 50.5)
Crankshaft pulley nut *(tabs knocked over)* : ..... 13 to 15 (94 to 108)

c) Timing :

Adjusting nuts for rockers : ..... 1.5 to 2 (11 to 14.5)
Securing nuts for cylinder head cover : ..... 1 to 1.25 (7 to 9)
Fixing nuts for timing cover : ..... 1 to 1.5 (7 to 11)
Plug for timing pin hole : ..... 2.25 to 2.75 (16 to 20)
Securing bolts for camshaft clamp fork : ..... 1.5 to 2 (11 to 14.5)
Securing bolts for camshaft sprocket and fuel pump eccentric : ..... 7 to 8 (50.5 to 58)
Securing bolts for timing chain tensioner : ..... 0.5 to 0.75 (3.5 to 5.5)

d) Cylinder head :

Cylinder head bolts **(See diagram for tightening sequence)** :
⟶ engine N° **44200** : ..... 6.5 to 7 (47 to 50.5)
44202 engine No. ⟶ : ..... 7.5 to 7.7 (54 to 55.5)
Fixing stud for exhaust manifold : ..... 0.5 to 0.75 (3.5 to 5.5)
Fixing stud for carburettor : ..... 0.5 to 0.75 (3.5 to 5.5)
Water temperature sensor switch : ..... 4 to 5 (29 to 36)

e) Cylinder block :

Gearbox to crankcase nuts and bolts : ..... 1.25 to 1.5 (9 to 11)
Cylinder block water drain plug : ..... 3 to 4 (21.5 to 32.5)
Fixing bolts for main bearing caps : ..... 5 to 5.5 (36 to 40)
Side fixing bolts for main bearing caps : ..... 0.75 to 1.25 (5.5 to 9.0)
Oil pressure switch : ..... 4 to 5 (29 to 36)

f) Fixing bolts for exhaust manifold : ..... 1.25 to 1.75 (9 to 12.5)

g) Cooling system :

Water pump fixing bolts : ..... 1 to 1.25 (7 to 9)

h) Lubrication system :

Sump drain plug : ..... 2.5 to 3 (18 to 21.5)
Strainer securing bolts : ..... 1 to 1.25 (7 to 9)
Oil pump securing screws : : ..... 0.5 to 0.75 (3.5 to 5.5)

OPERATION
VD2. 112-0

ADJUSTING THE ROCKERS

I. ADJUSTING THE ROCKERS

The adjustment must be carried out with the engine cold.

1. Remove the following :
- the spare wheel,
- the fixing clamp for capacity chamber (2) and screws (5) securing the header tank (do not discard the spacer). Take these elements off and set them down on the engine.

Push aside water pipe (6).

NOTE : The access can be made easier by removing air filter (3) *(take care not to allow the rubber bushes to fall)* and spare wheel supporting bar (4).

2. Remove cylinder head cover (7) and its gasket.

3. Adjust the valve rocker clearance :

Inlet : 0.10 to 0.15 mm (.004 to .006 in)
Exhaust : 0.25 mm (.0.10 in).

ACCEPTABLE METHODS

I. "Rocking" the valves :

(Inlet valve starting to pen, and exhaust valve closing).

Bring	No. 1	in	" rocking	position ",	adjust No. 4
"	No. 3	"	"	"	" No. 2
"	No. 4	"	"	"	" No. 1
"	No. 2	"	"	"	" No. 3

II. Exhaust valves fully open :

Valve to be opened fully :	Adjustment of the rocker arm clearance	
	Inlet	Exhaust
Exhaust valve No. 1	No. 3	No. 4
" " No. 3	No. 4	No. 2
" " No. 4	No. 2	No. 1
" " No. 2	No. 1	No. 3

Tightening torque for lock nuts (10) on rocker adjusting screw : 1.5 to 2 da Nm (11 to 14.5 ft.lb).

Use tool 8.0130 from engine kit 8.0132

NOTE : To rotate the crankshaft :
- Lift one of the front wheels of the vehicle, and engage 4 th gear so as to rotate the crankshaft by means of the raised wheel.
- or rotate the crankshaft by using an open end spanner on crankshaft pulley nut.

4. Fit the cylinder head cover (7) and its gasket. Make sure that there is no roughness on the joint surfaces.

Tightening torque for screws (8) :
0.5 to 0.75 da Nm (3.5 to 5.5 ft.lb)
Tightening torque for nut (9) :
1 to 1.25 da Nm (7 to 9 ft.lb).

5. Fit the following :
- header tank (1) and its fixings (5),
- capacity chamber (2) and its fixing clamp,
- water pipe (6),
- the spare wheel.

6. Free the gear previously engaged.

78-478

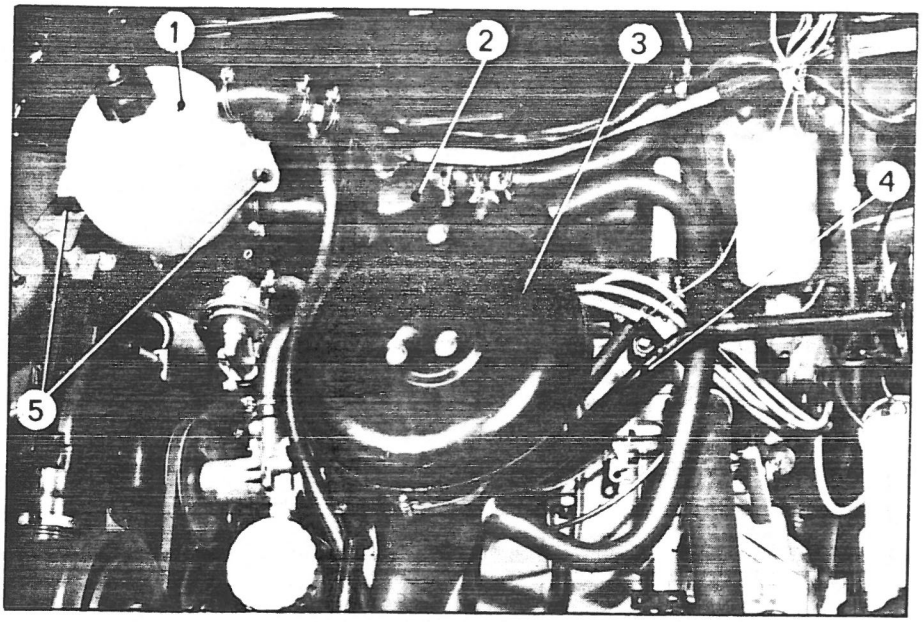

78-479

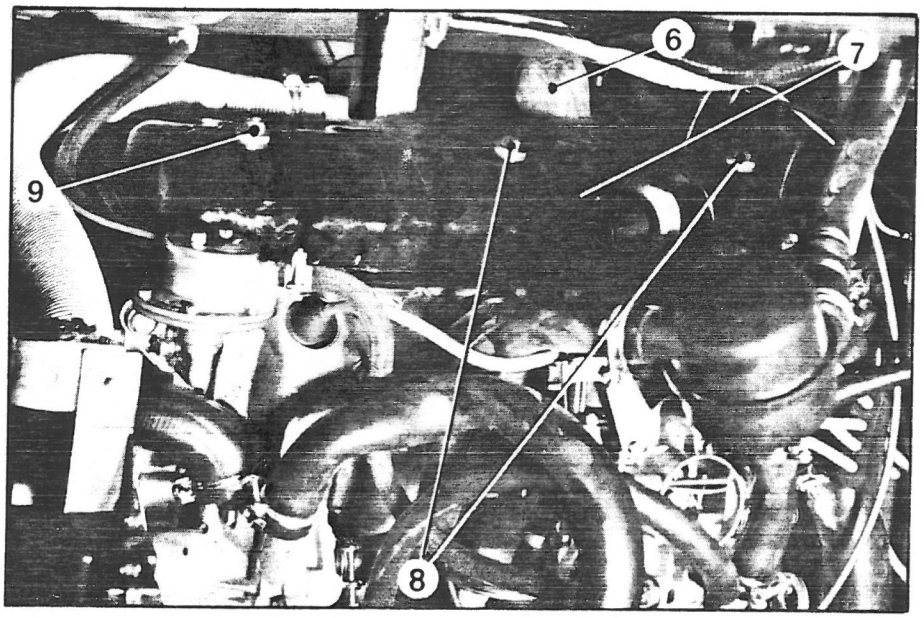

78-480

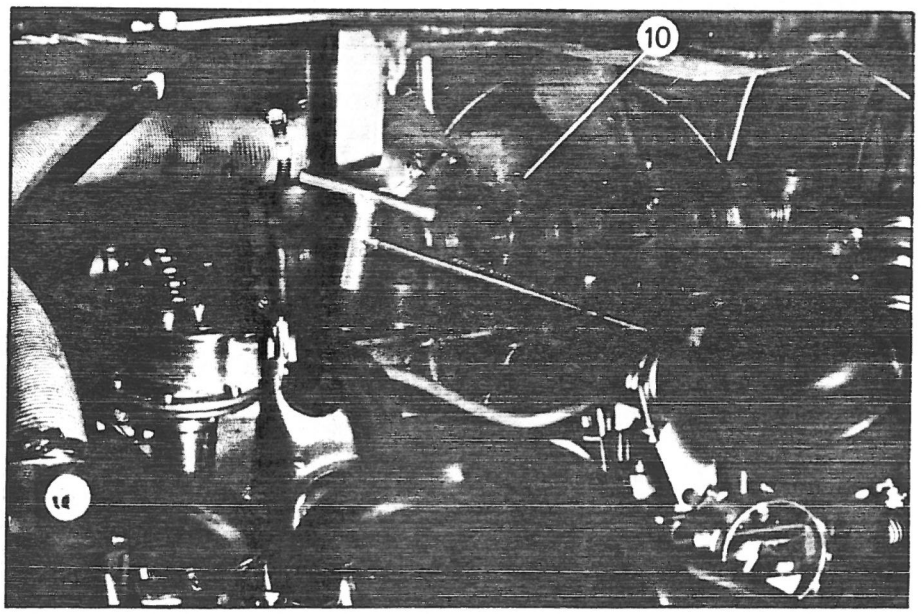

II - CHECKING THE VALVE TIMING.

The check must be carried out with a cold engine.

1. Remove the following :
- the spare wheel,
- the fixing clamp for aeration chamber (2) and the header tank securing bolts (5) (do not discard the spacer). Lay these items aside.

Push hose (6) to one side.

NOTE : Easier access can be obtained by removal of the air filter (3) *(take care to retain the rubbers bushes)* and spare wheel support bar (4).

2. Remove the cylinder head cover (7) and gasket.

3. Bring No. 4 piston to T.D.C., *valves « rocking »*. The mark **« a »** on the flywheel face should be opposite the **0** on the graduated scale.

NOTE : To rotate the engine, jack up one side of the front of the vehicle to lift one wheel clear of the ground. Engage 4th gear (ignition off) and rotate the road wheel thereby rotating the engine.
Alternatively rotate the crankshaft by using an open ended spanner on the crankshaft pulley nut.
(Gearbox in neutral).

♦ **4. Adjust the valve clearance of No. 1 cylinder inlet valve to 1.10 mm (0.043 in) (All models).**

5. Rotate the engine **exactly one more revolution** in the normal direction of rotation *(anti-clockwise viewed from flywheel end)*.
Position the flywheel mark opposite the 0 of the graduated scale.

6. Verify the valve clearance of No. 1 inlet valve (10).
♦ **This clearance must be between :**
Engines XW3, XW5 type 109/5 :
XZ5X type 129/5 :
0.05 and 0.45 mm (0020 and 018 in)
Engines XW7 type 109/5 E :
0.5 and 0.75 mm (0020 and 030 in)

7. Reset No. 1 cylinder valve clearances.
Inlet : **0.10 to 0.15 mm (004 to 006 in)**
Exhaust : **0.25 mm (010 in)**
Tighten the valve rocker lock-nuts to 1.5 to 2 m.daN (11 to 14.5 ft.lbs).
Use tool No. 8.0130 from engine kit 8.0132

8. Refit the cylinder head cover (7) and ensure that the gasket is undamaged.
Tighten bolts (8) : 0.5 to 0.75 m.daN (3.5 to 5.5 ft.lbs)
Tighten nut (9) : 1 to 1.25 m.daN (7 to 9 ft.lbs)

9. Refit the following :
Header tank (1) and its fixings.
Aeration chamber (2) and its clamp.
Hose (6) and the spare wheel.

10. Disengage 4th gear *if necessary.*

OPERATION
VD2. 142-00

CHARACTERISTICS OF THE CARBURETTOR

♦ CHARACTERISTICS OF THE CARBURETTOR

SOLEX downdraught carburettor with manual choke and constant enrichment idling device.

Type **32 PBIS A-7** *Mark* **A 101-1** (Engine type 109-5 ⟶ *7/1980*)
Type **32 PBIS A-11** *Mark* **CIT 278**[1] (Engine type 109-5 *7/1980* ⟶ *3/1981*)
Type **32 PBIS A-11** *Mark* **CIT 240** (Engine type 129-5 *7/1980* ⟶) (with idle cut out)
Type **32 PBIS A-12** *Mark* **A 230** (Engine type 109-5 E *3/1981* ⟶ *6/1981*)
Type **32 PBIS A-12** *Mark* **A 230/1** (Engine type 109/5 E *6/1981* ⟶)

DESCRIPTION	MARK	**A 101-1**	**CIT 278**[1]	**CIT 240**	**A 230 A 230/1**
Venturi bore :	K	25	25	25	24
Main jet :	Gg	127.5	127.5	127.5	120
Air correction jet :	a	155	160	160	150
Idling jet :	g	42	43	42	41
Accelerator pump injector :	i	40	40	40	35
Needle valve :	P	1.5 mm	1.5 mm	1.5 mm	1.6 mm
Float :	F	5.7 g	5.7 g	5.7 g	5.7 g
Constant enrichment jet :	g CO	30	30	30	30
Econostat jet :	Ce	50	55	50	
Enrichment jet :					50
Orifice in choke flap :					
Air regulation screw :	Va				
Volume control screw :	W				
Vacuum pipe *(advance)* :	1				
Idling air orifice :	2				
Constant enrichment air orifice :	3				
Throttle butterfly :	4				
Accelerator pump valve :	5				
Accelerator pump :	6				
Hot spot union :	7				
Throttle butterfly setting :					
Angle of leakage at idle :	ORF	1°	1°	1°	1°
Angle of positive opening *(choke fully closed)* :	OPR	0.85 mm	0.75 mm	0.90 mm	0.75 mm

VD. 14-1

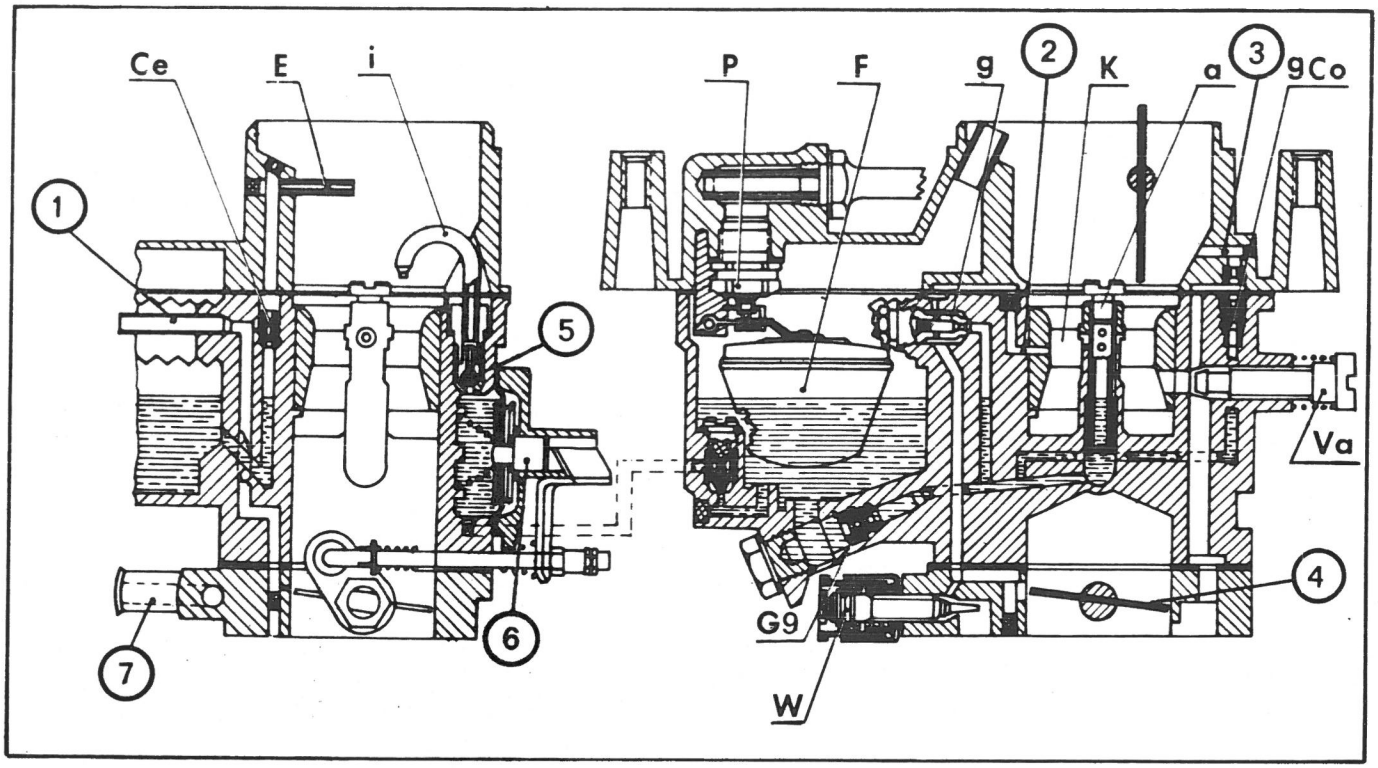

VD. 14-2

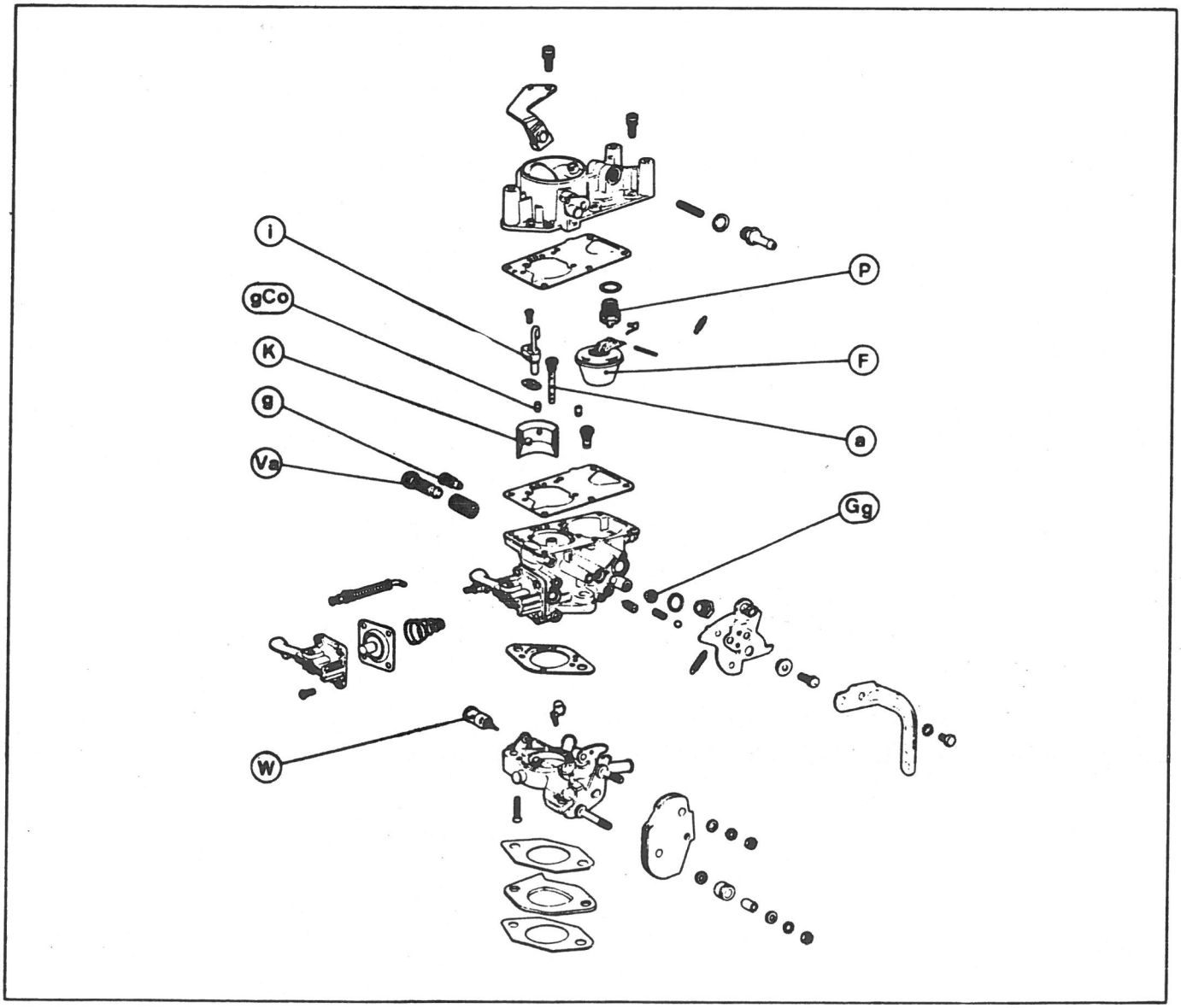

OPERATION
VD2. 142-0

ADJUSTING THE CARBURETTOR

I. CHECKING AND ADJUSTING SOLEX CARBURETTORS
32 PBIS A-7 Rep. A 101-1 - 32 PBIS A-11 Rep. 278-1 and 240

IMPORTANT NOTE : Do not tamper with the setting of the throttle butterfly stop screw (1). This has been accurately pre-set by the manufacturer. (This does not apply to an adjustment carried out on a carburation test bench).

1. ADJUSTMENT OF THE CARBURETTOR

a) Checking and adjusting the float :
- Turn the float chamber cover upside-down.
- Position setting gauge MR. 630-71/9 on the gasket face of the cover *(gasket in place).*
- The float should touch the gauge *(with ball depressed).*
- Adjust the float setting, if required, by bearing on the float toggle. (In the case of a plastic float, replace it).

b) Adjusting the accelerator pump stroke :
- Insert checking pin **A**, between the throttle butterfly edge and the carburettor body.
- Slacken nut (2) several turns.
- Retighten the nut until it touches the lever.

Carburettor type	32 PBIS A-7 Rep. A-101-1	32 PBIS A-11 Rep.278-1	32 PBIS A-11 Rep. 240
dia. of checking rod **A**	5 ± 0.5 mm	2.5 ± 0.5 mm	2.2 ± 0.5 mm

c) Adjusting the throttle butterfly, under use of choke :
Completely close the choke flap and hold it closed.
Check and verify the throttle butterfly preset opening *against values given in Op. VD2. 142-00).*
If the preset opening is incorrect, turn the screws (5) in the appropriate direction.

2. ADJUSTING THE IDLING SPEED

- Idling speed : 900 $^{+50}_{+0}$ rpm

CO Content : 1.5 ± 0.5% - CO_2 Content : ≥ 9%

Adjustment conditions
- Engine cleared of unburnt gases,
- Correct spark plugs fitted, cleaned and correctly gapped.
- Rocker clearances and ignition correctly set,
- Air filter cleaned,
- Choke control fully « off ».
- Engine at normal operating temperature *(indicated by cut-in and cut-out of electric cooling fan).*

Adjusting the idling speed, using an analyser :
a) Remove the tamper-poof seal from the volume screw *(see Op. VD. 142-000).*
b) Adjust air regulating screw (3) to give an engine speed of 900 $^{+50}_{0}$ rpm
c) Adjust the mixture to give a 1.5 ± 0.5% content using volume control screw (4).
d) Re-adjust the tickover to 900 $^{+50}_{-0}$ rpm using the air regulation screw (3).

Repeat the above if necessary if the CO content varies.

♦ REMEMBER : Take note of the CO and CO_2 readings of the analyzer and transfer them to the corrected CO chart. The corrected result should be **below 4.5%** for *vehicles up to 10/1981* or **below 3.5%** for *vehicles from 10/1981.*

e) Refit a *white* tamper-proof seal onto the volume control screw (4) *(see Op. VD. 142-000).*

Adjustment, using test bench L'POLLU :

Carburettor	Throttle butterfly opening W and Va closed	Preset idle	
		W open Va closed	W and Va open
32 PBIS A-11 Rep. 278-1	K 240	K 280	N 330
32 PBIS A-11 Rep. 240	K 225	K 275	N 310
32 PBIS A-7 Rep. A 101-1	K 190	K 230	N 320

78-784

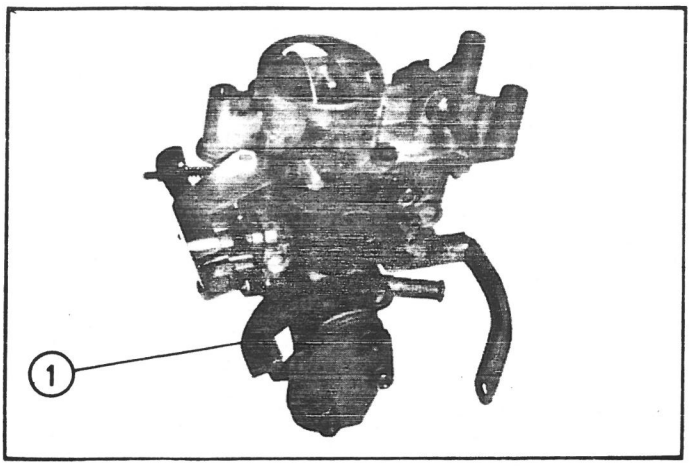

78-790

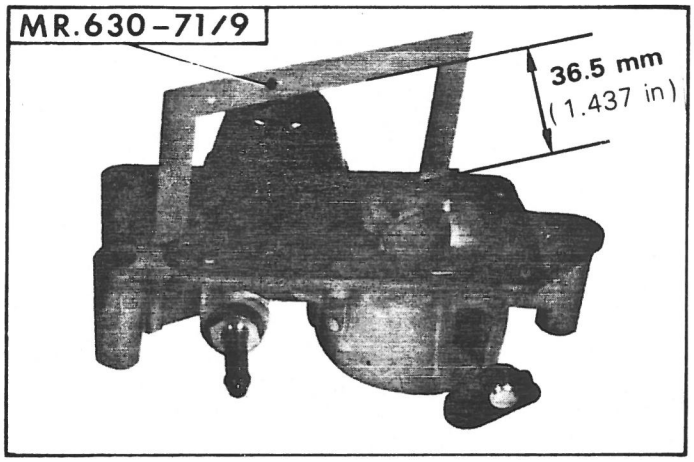

78-789

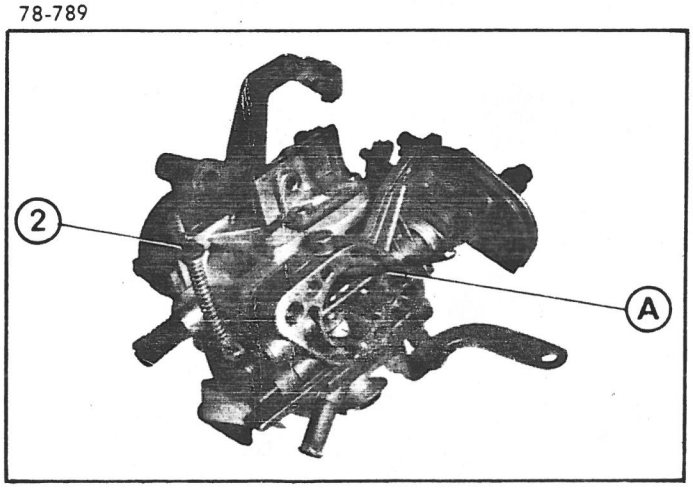

78-787

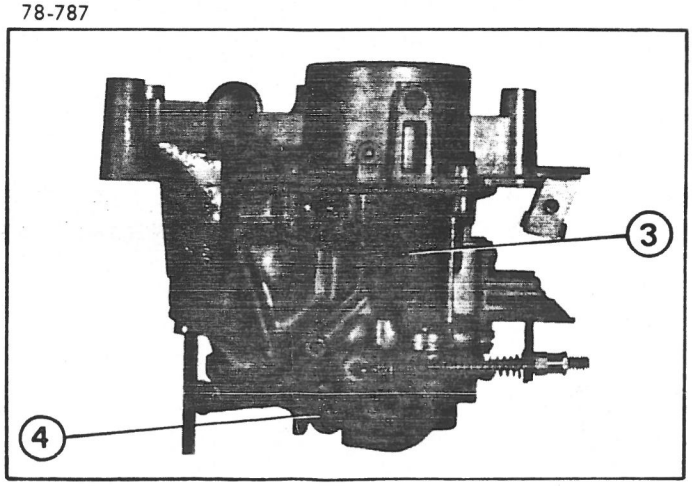

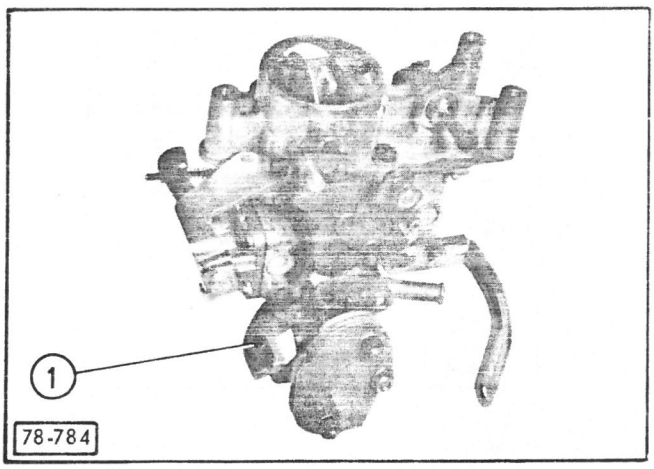
1
78-784

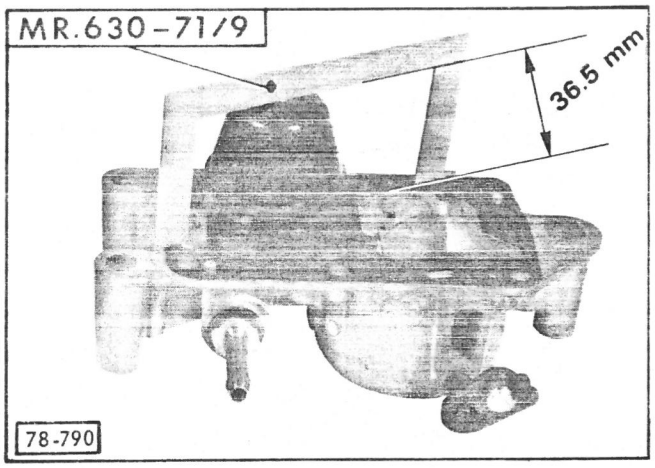
MR.630-71/9
36.5 mm
78-790

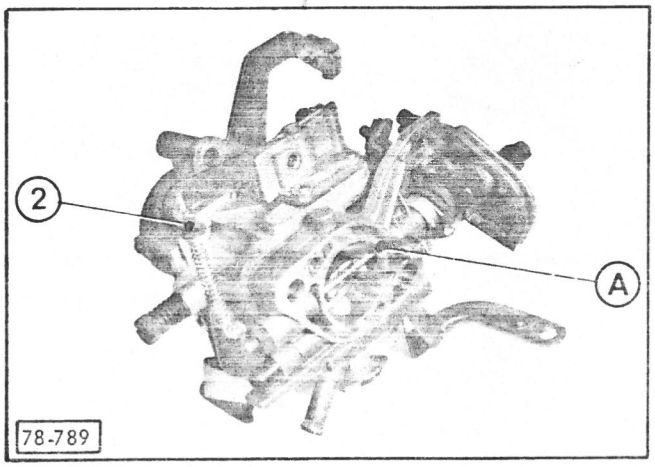
2
A
78-789

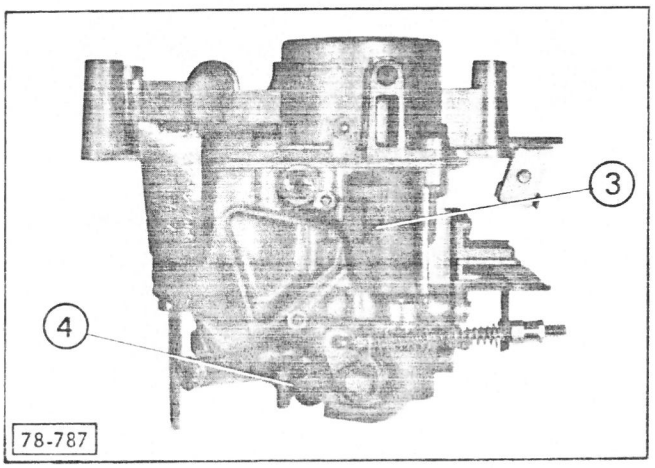
3
4
78-787

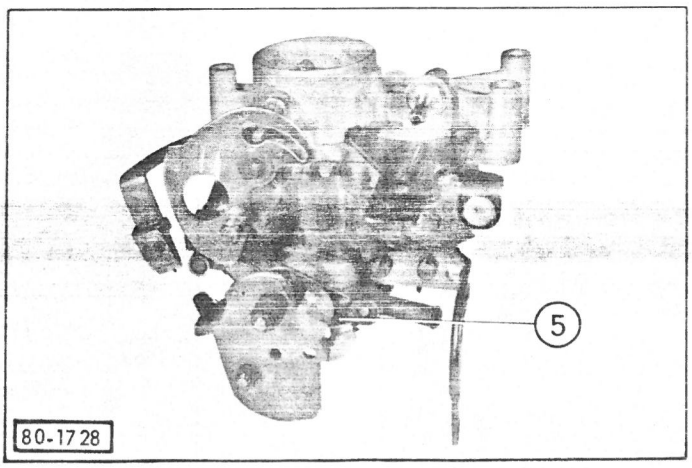
5
80-1728

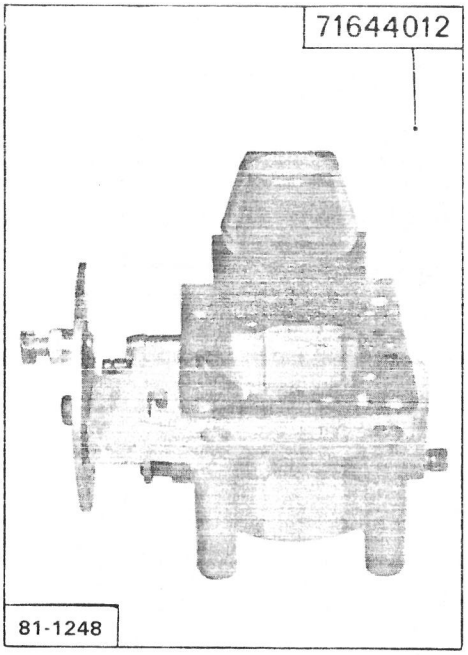
71644012
81-1248

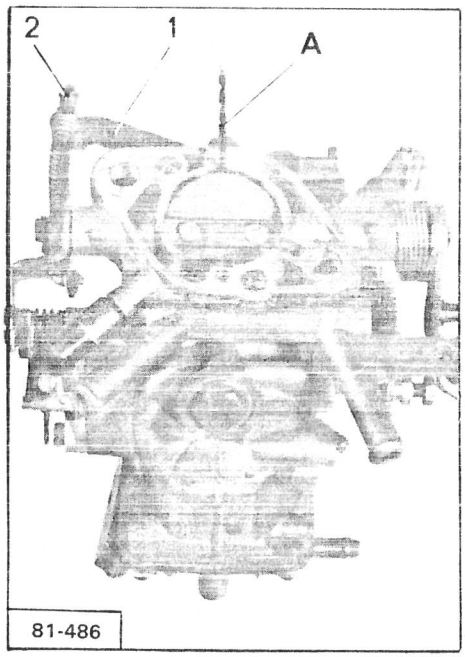
2
1
A
81-486

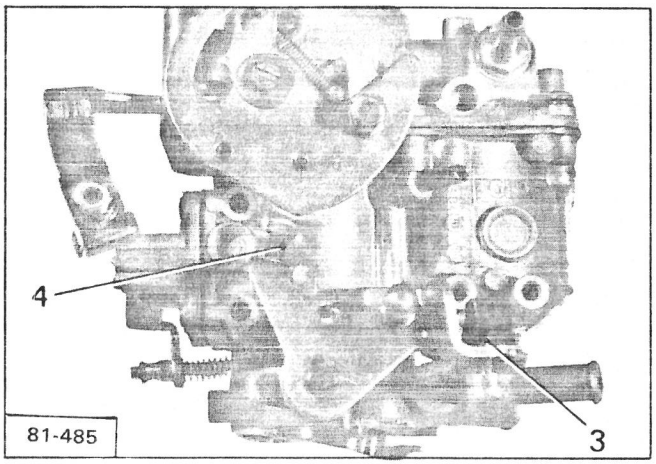
4
3
81-485

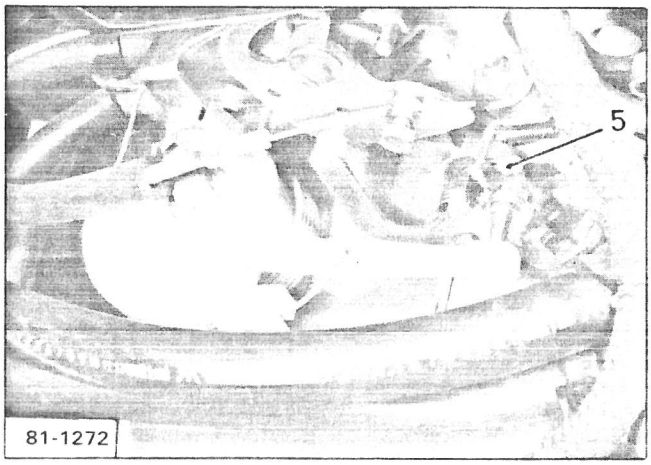
5
81-1272

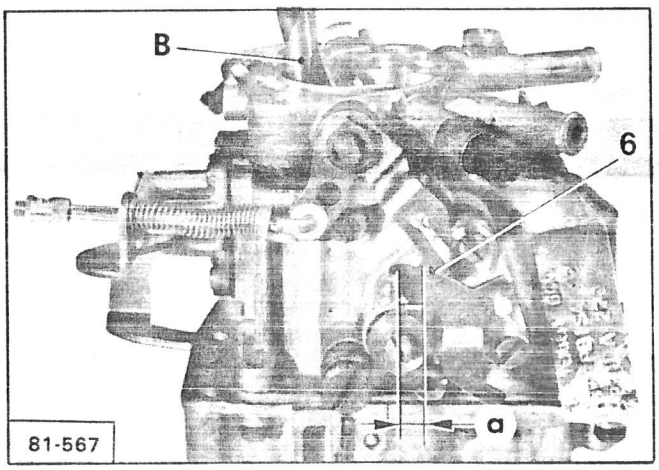
B
6
a
81-567

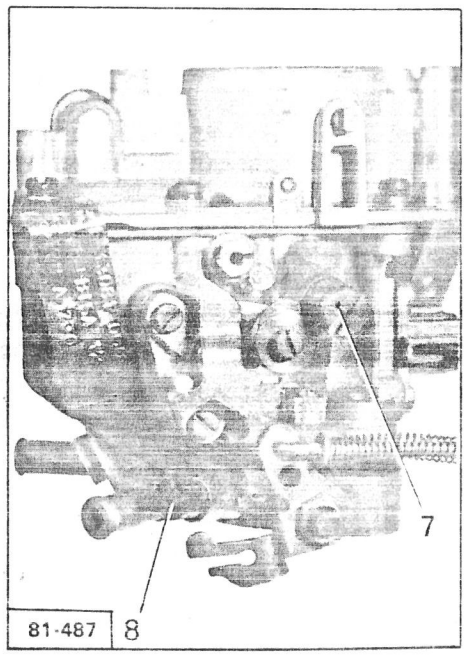
7
8
81-487

II - CHECKING AND ADJUSTING SOLEX CARBURETTOR 32 PBIS A-12 Rep. A 230 and A 230/1

IMPORTANT NOTE : Do not tamper with the setting of the throttle butterfly stop screw (1). This has been accurately pre-set by the manufacturer.*(This does not apply to an adjustment carried out on a carburation test bench).*

1. ADJUSTMENT OF THE CARBURETTOR.

a) **Checking and adjusting the float :**
The float is not adjustable.
Checking : Remove the float chamber cover and turn it upside down.
Gasket and setting gauge 71 644 012 in place the float must touch the gauge. If not, replace the float.

b) **Adjusting the accelerator pump stroke :**
Slacken nut (2).
Fully displace the pump actuating lever to compress the spring of the pump diaphragm.
Position a rod of diameter 2 ± 0.5 mm **A** between the throttle butterfly edge and the carburettor body.
Retighten the nut (2) until it just touches the rod **A** without any free play.

c) **Adjusting the throttle butterfly opening under use of choke :**
Completely close choke flap and hold it closed.
Verify with the aid of a rod of diameter 0.75 mm the pre-set opening of the butterfly.
If this opening is incorrect, turn the screw (4) (A 230) or screw (5) (A 230/1) in appropriate direction to obtain the correct setting.

d) **Adjusting the cold start enrichment device :**
Position a rod of diameter 10 mm between the throttle butterfly and carburettor body.
The dimension **« a »** must be between 1 and 3 mm between throttle and choke external levers.
If not, bend arm (6) in the appropriate direction to obtain the correct setting.

2. ADJUSTING THE IDLING SPEED.

Idling speed : 750 $^{+50}_{0}$ rpm

CO level : 1.5 ± 0.5% - CO_2 level : ≥ 9%.

Adjustment conditions: Engine cleared of unburnt gases, correct spark plugs cleaned and correctly gapped, rocker clearances and ignition correctly set, air filter cleaned, choke control fully « off », engine at normal operating temperature *(indicated by cut-in and cut-out of engine cooling fan).*

Adjusting the idling speed using an analyser :
a) Remove the tamper-proof seal from the volume control screw (8) *(see Op. VD. 142-000).*
b) Adjust the air regulation screw (7) to bring the engine speed to 750 $^{+50}_{0}$ rpm
c) Adjust the mixture to give a 1.5 ± 0.5% CO content using the volume control screw (8).
d) Re-adjust tickover to 750 $^{+50}_{0}$ rpm using air regulation screw (7).

Repeat the above if the CO content varies.
REMEMBER : Take note of the CO and CO_2 readings of the analyser and transfer them to the correct CO chart. The correct result should be below 4.5% for *vehicles up to 10/1981* and below 3.5% for *vehicles from 10/1981.*
e) Refit a *white* tamper-proof seal onto the volume control screw (8) *(see Op. VD. 142-000).*

Adjustment using test bench L'POLLU.

Carburettor	Throttle butterfly opening W and Va closed	Pre-set idle	
		W open Va closed	W and Va open
32 PBIS A 12 A 230 A 230/1	K 330	K 365	N 380

OPERATION
VD2. 210-00

CHARACTERISTICS OF THE IGNITION SYSTEM

CHARACTERISTICS

DISTRIBUTOR :

Make : DUCELLIER Ref. 525 193 C
PARIS-RHONE Ref. DA 4 ES 23

Type : centrifugal advance device with vacuum advance correction.
Rotation direction : clockwise (seen from drive side).
Firing order : 1 -3 -4 -2.
Static advance : 5° before TDC (on quadrant).

Closing angle of cam : 57° ± 2°
DWELL ratio : 63 % ± 3 %
These valves correspond to a distance between contact pads of 0.35 to 0.45 mm (0.013 to 0.017 in) approximately.
Condenser capacity : 0.22 μF.
Reference of advance curves : M 96 (engraved on body).

M 96
- **Centrifugal advance** : Curve V. 21-3 (Distributor advance in deg.- Speed in rpm)
- **Vacuum advance** : Curve V. 21-4 (Distributor advance in deg.- Vacuum in m.bar)

IGNITION COIL :

Make : DUCELLIER
PARIS-RHONE

HIGH TENSION LEADS :

Description of leads	Length	Resistance of leads (at 20° C) (68° F)
Coil to distributor :	310 mm $^{+10}_{0}$	430 Ω ± 20 %
Distributor to No. 1 cylinder :	420 mm $^{+10}_{0}$	580 Ω ± 20 %
Distributor to No. 2 cylinder :	460 mm $^{+10}_{0}$	650 Ω ± 20 %
Distributor to No. 3 cylinder :	600 mm $^{+10}_{0}$	840 Ω ± 20 %
Distributor to No. 4 cylinder :	650 mm $^{+10}_{0}$	910 Ω ± 20 %

SPARKING PLUGS :

Conical seating type.
Tightening torque, cylinder head cold : **1.5 to 2 da Nm (11 to 14.5 ft.lb)** (Use handle with automatic cut-out No. OUT. 12 8301-T and plug spanner No. OUT. 12 8302-T.They are supplied by the Replacement Parts Department).
Spark plug gap : 0.6 to 0.7 mm (0.023 to 0.027 in).
Makes and types : Refer to the appropriate Technical Bulletins.

V. 21-3

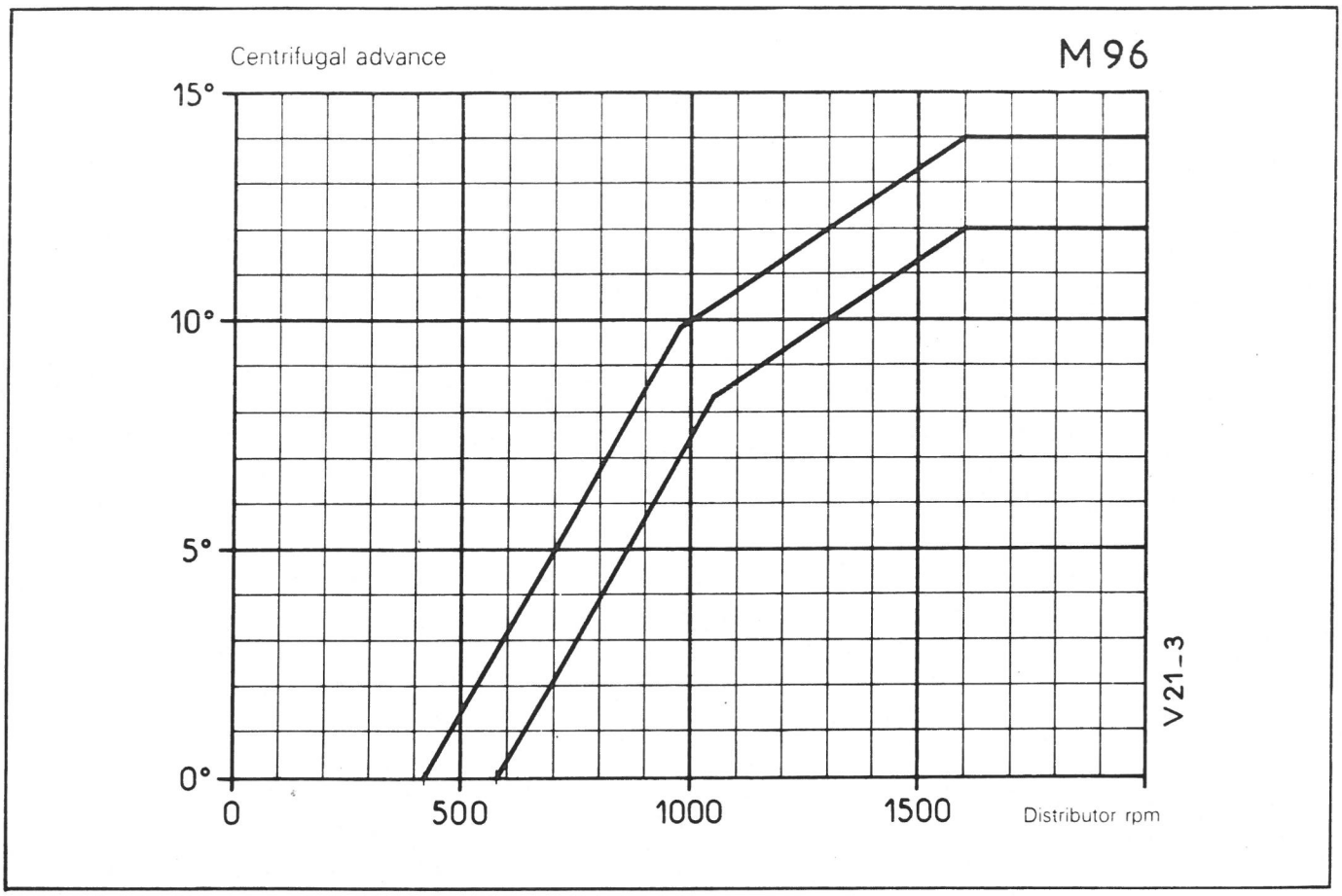

V. 21-4

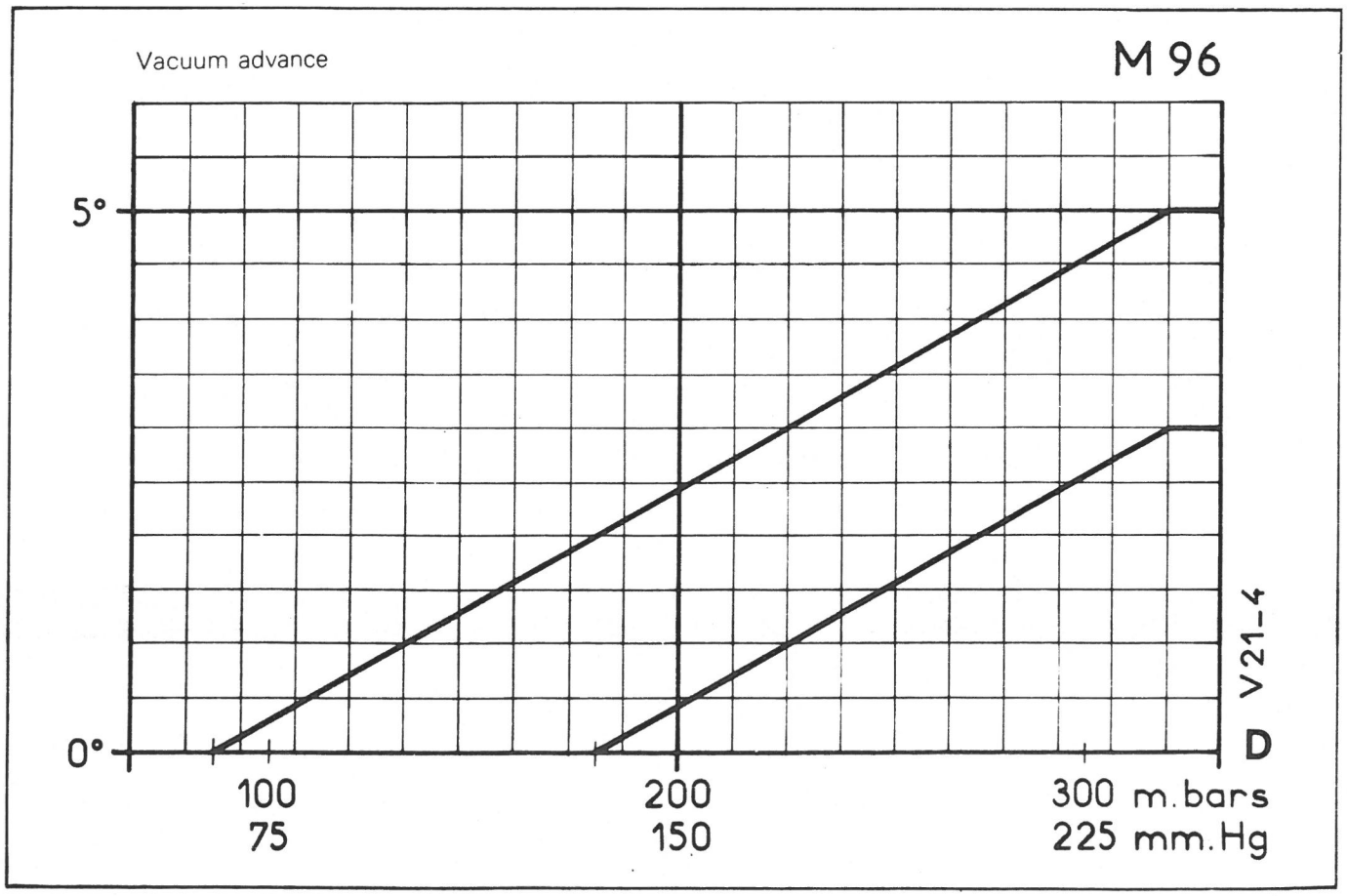

813-1 (1)

OPERATION
VD2. 210-0

CHECKING AND ADJUSTING THE IGNITION

I. CHECKING AND ADJUSTING THE IGNITION ON THE VEHICLE :

1. Checking the dwell angle :

- *Using a cam angle checking device,* the closing angle must be 57° ± 2 %.
- *Using a dwellmeter,* the dwell ratio must be 63 % ± 3 %.

2. Checking and setting the ignition timing :

a) Using a test lamp :

Raise the LH front wheel and engage 4 th gear.
Connect the test lamp between contact breaker and earth.
Remove cover (1).
Switch on the ignition.
By rotating the wheel (in its normal direction of rotation) the bulb should light up when the flywheel mark comes opposite 5° on gratuated rule. If not, loosen the screws securing the distributor and turn the casing fully anticlockwise, then clockwise, until the bulb lights up, with flywheel mark facing 5° graduation on rule.
Tighten the three screws and refit the cover.
Disconnect the test lamp and switch off the ignition.

b) Using a strobe lamp :

Disconnect the capsule pipe from the distributor.
Connect the strobe lamp to one HT lead.
Run the engine at idling speed (900 rpm).
The flywheel mark should be opposite the 5° graduation on the rule. If not, loosen the three clamp screws of the distributor and adjust it.

3. Checking the centrifugal advance :

(See curve V. 21-3).
Distributor advance (in deg)
Distributor rpm
Once the ignition timing is correctly set, use a rev-counter and a strobe lamp with phase shifter to make sure the advance is developing according to the curve.
If the valves are incorrect, adjust the distributor on a bench.
NOTE : Make sure graduated rule (2) is correctly positioned. The paint on the securing screws must bear not trace of flaking off. If in doubt, proceed to the adjustment of the rule, according to *Op. VD2. 100-3.*

II. CHECKING AND ADJUSTING ON DISTRIBUTOR TEST BENCH.

1. Check and adjust the dwell angle : 57°.

2. Check the symmetry of the cams : 90° ± 1°.

3. Check that there is no « bouncing » of the moving contact up to 3,500 rpm.

4. Check how the centrifugal advance is developing with regard to curve V. 21-3.
If the advance is developing incorrectly, bear on the securing lugs of the springs so as to alter the tension of the latter.

5. Check the vacuum advance development.
(See curve V. 21-4).
Distributor advance (in deg)
Vacuum in m.bar.
If these valves are incorrect, bear on component (4) (Ducellier).
NOTE : With Ducellier distributor, check dwell balance.
Ensure that the dwell ratio stays within 63 % ± 3 % (or 57° ± 2°), with the distributor running at 300 rpm and, by building up, then eliminating, a 300 m.bar vacuum. If not, proceed **to a new dwell angle setting by turning screw (3).**

78-798

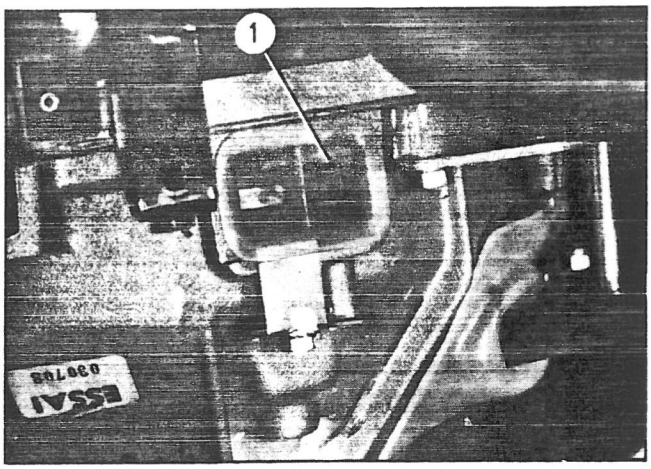

78-797

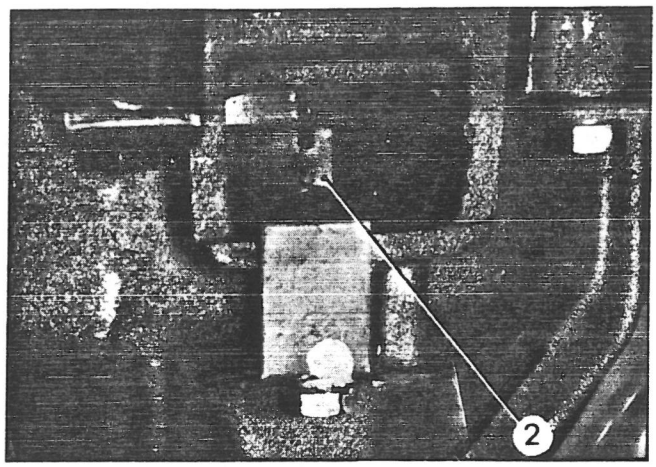

78-795

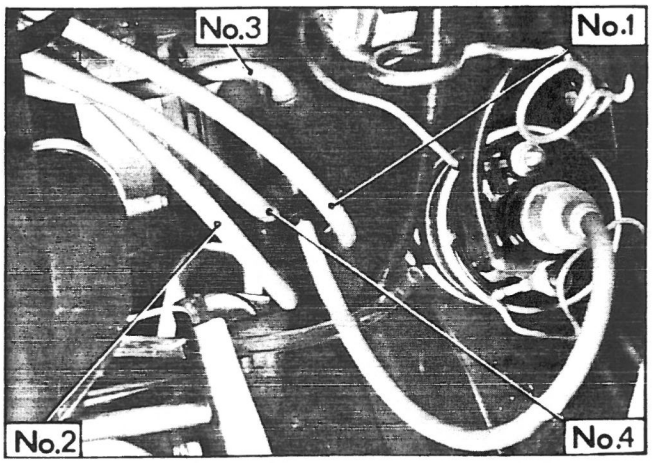

78-793

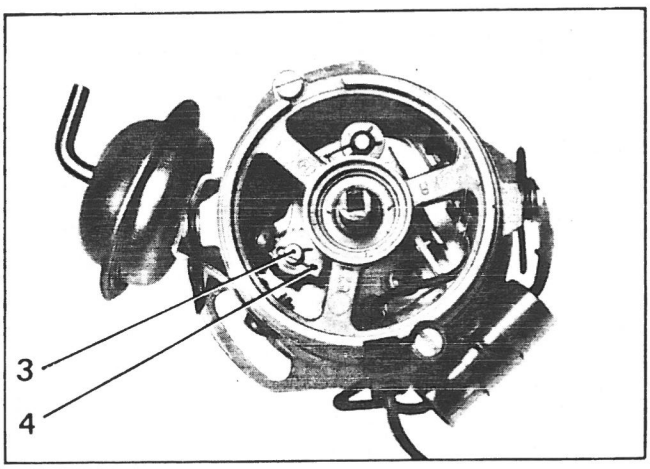

CENTRIFUGAL ADVANCE CURVE V.21-3

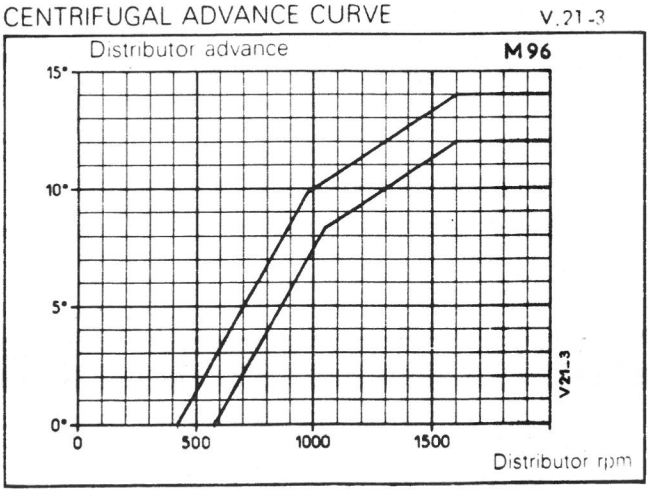

VACUUM ADVANCE CURVE V.21-4

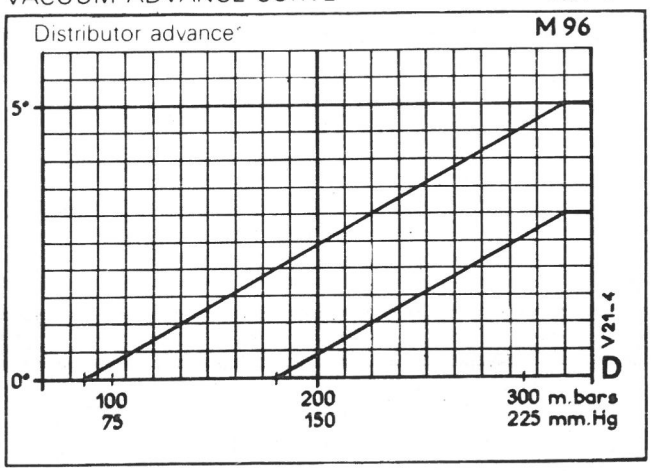

OPERATION
VD2. 210-00 a

VISA II SUPER E

(3/1981 ⟶)

VISA II L

(7/1981 ⟶)

CHARACTERISTICS OF TRANSISTORISED IGNITION

TRANSISTORISED IGNITION WITH ELECTROMAGNETIC TRIGGERING

PRINCIPLE OF OPERATION.

Transistorised ignition comprises :
- a coil (3),
- a transistorised module (5),
- a distributor (4) comprising a reluctor and an HT Pick-up.

Battery current flows through the primary windings of the ignition coil causing a switching transistor in the module to conduct. When the reluctor, comprising a polarised four branch wheel and a pick-up, triggers a signal, this switches off the transistor and interrupts the flow of current through the primary winding of the ignition coil. This in turn creates an « HT » voltage in the secondary winding to be produced in the conventional way.

The HT pick-up and the advance mechanism are identical to those of a conventional ignition system. This type of ignition system incorporates a non-adjustable dwell angle but it is infinitely variable according to engine speed.

CHARACTERISTICS.

DISTRIBUTOR : DUCELLIER reference 585 282
Reluctor resistance : 1100 ± 200 Ω
Identification of centrifugal and vacuum advance curves : M 131 E
N : Distributor speed rpm
A : Advance in degrees
D : Vacuum { D1 : in millibars / D2 : in mm of Mercury

TRANSISTORISED MODULE : DUCELLIER 521 007
BOSCH 0 227 100 111

IGNITION COIL : DUCELLIER 520 015
BOSCH 0 221 121 317

SPARK PLUGS : Tapered seat : threads M 14 X 1.25, 16 mm across the flats.
Tightening torque *(cylinder head cold)* 1 to 1.3 m.daN (7 to 9 ft.lbs).
Use the pre-set torque ratched handle No. **OUT 8301-T** and plug spanner No. **OUT 12 8302-T.**
Plug gap : 0.6 to 0.7 mm (.023 to .027 in)
Makes and Types { AC : 42 LTS / CHAMPION : BN 9 Y / MARCHAL : SCGT 34/5 H.

Precautions to be taken :
- Only use a « High voltage » type rev. counter with clip on type pick-up.
- Do not use a boost charger to start the engine, use only a 12 Volt battery.

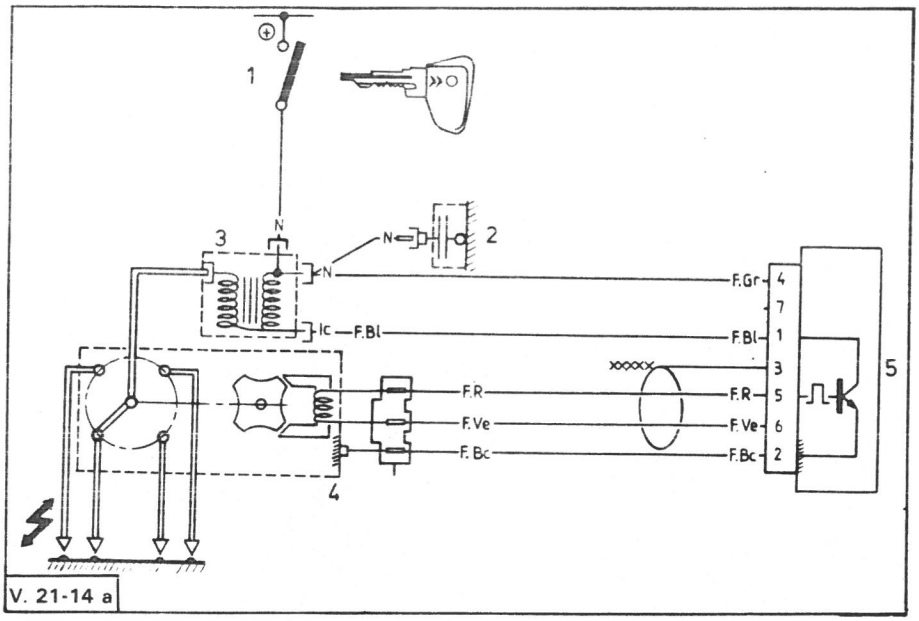

V. 21-14 a

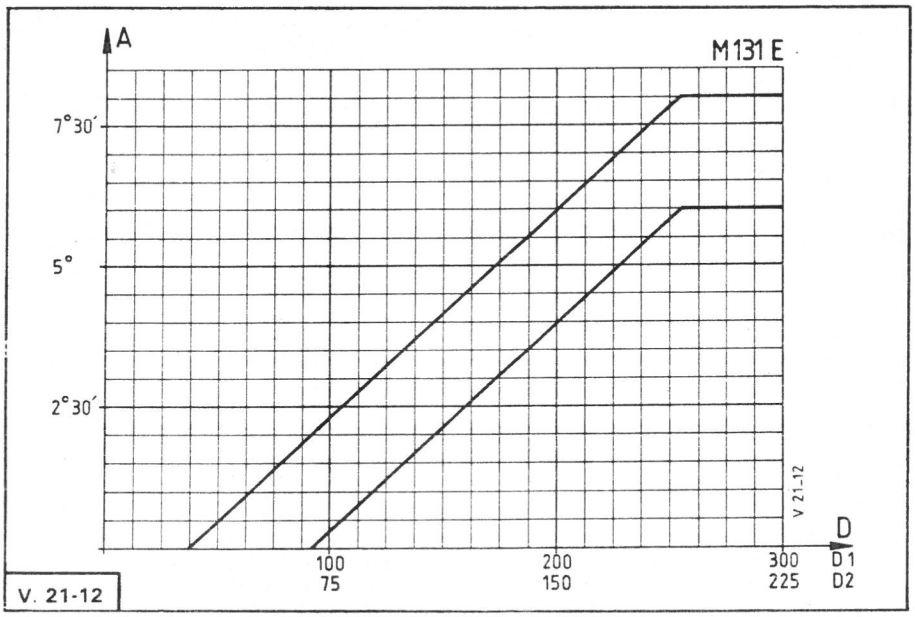

V. 21-12

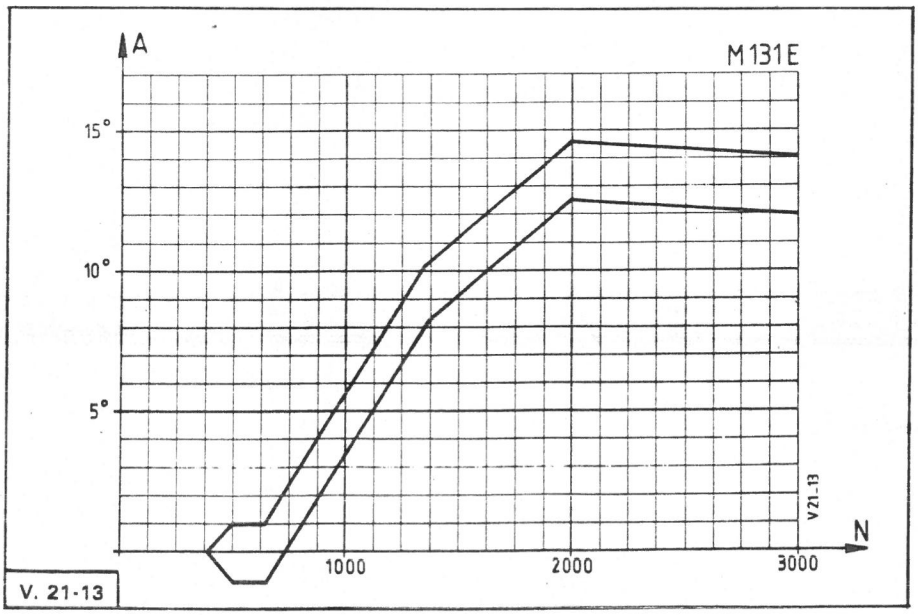

V. 21-13

OPERATION
VD2. 210-0 a

CHECKING THE TRANSISTORISED IGNITION

TRANSISTORISED IGNITION WITH ELECTROMAGNETIC TRIGGERING

Since March 1981, engines 109-5 E type XW 7 are fitted with a transistorised ignition system with magnetic triggering.

IGNITION SYSTEM COMPONENTS.

1 : Anti-theft switch
2 : Interference suppressor *(if radio fitted)*
3 : Ignition coil
4 : Reluctor
5 : Transistorised module : switches the ignition coil current on and off according to the signals from the distributor.

CHECKING THE IGNITION CIRCUIT *(using an ohmmeter)*

Disconnect the edge connector of the transistorised module.
The check is carried out by connecting *the ohmmeter* to the different *lands of the edge connector. Cross check the numbers on the module to identify which* circuit is which.

1. Checking the reluctor.

Measure	Ohmmeter between lands	Value on ohms (Ω)
Resistance	5 and 6	1100 approx.
Earth	2 and engine earth	0
Individually	5 and 2 then 5 and 3	∞

2. Checking the ignition coil.

Measure	Ohmmeter between lands	Value in ohms (Ω)
Primary resistance	1 and 4	≤ 0.8
Secondary resistance	1 or 4 and coil HT terminal	6000 approx.
Individually	1 or 4 and earth	∞

3. Checking the circuit from the ignition coil and module (with *(with test lamp)*

Switch on the ignition : with the test lamp connected between the « BAT » terminal of the ignition coil and earth, then between the No. 4 contact of the module connector and earth, the lamp should light up.
If all the above conditions are met and the fault persists replace the transistorised module.
Switch off the ignition.

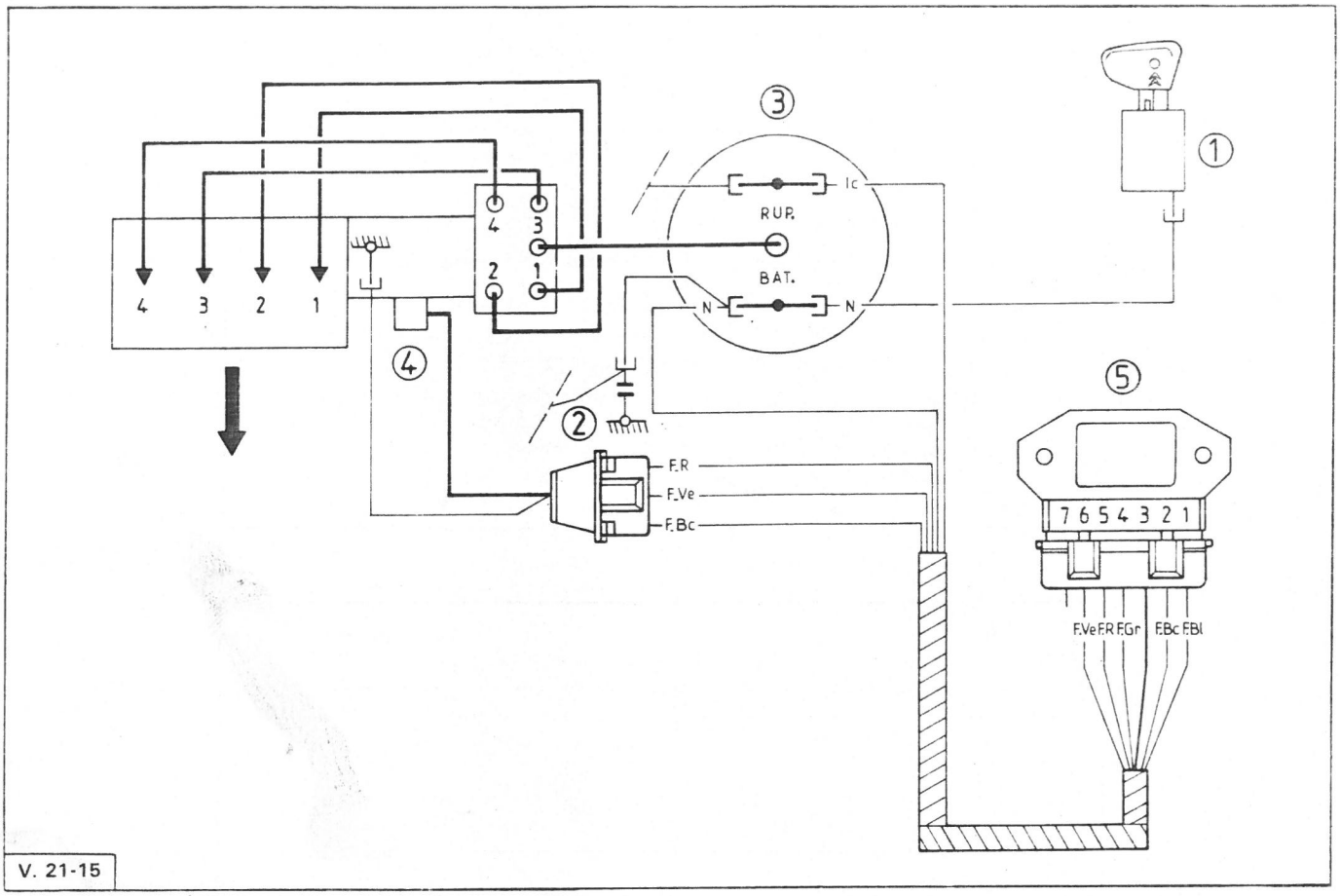

V. 21-15

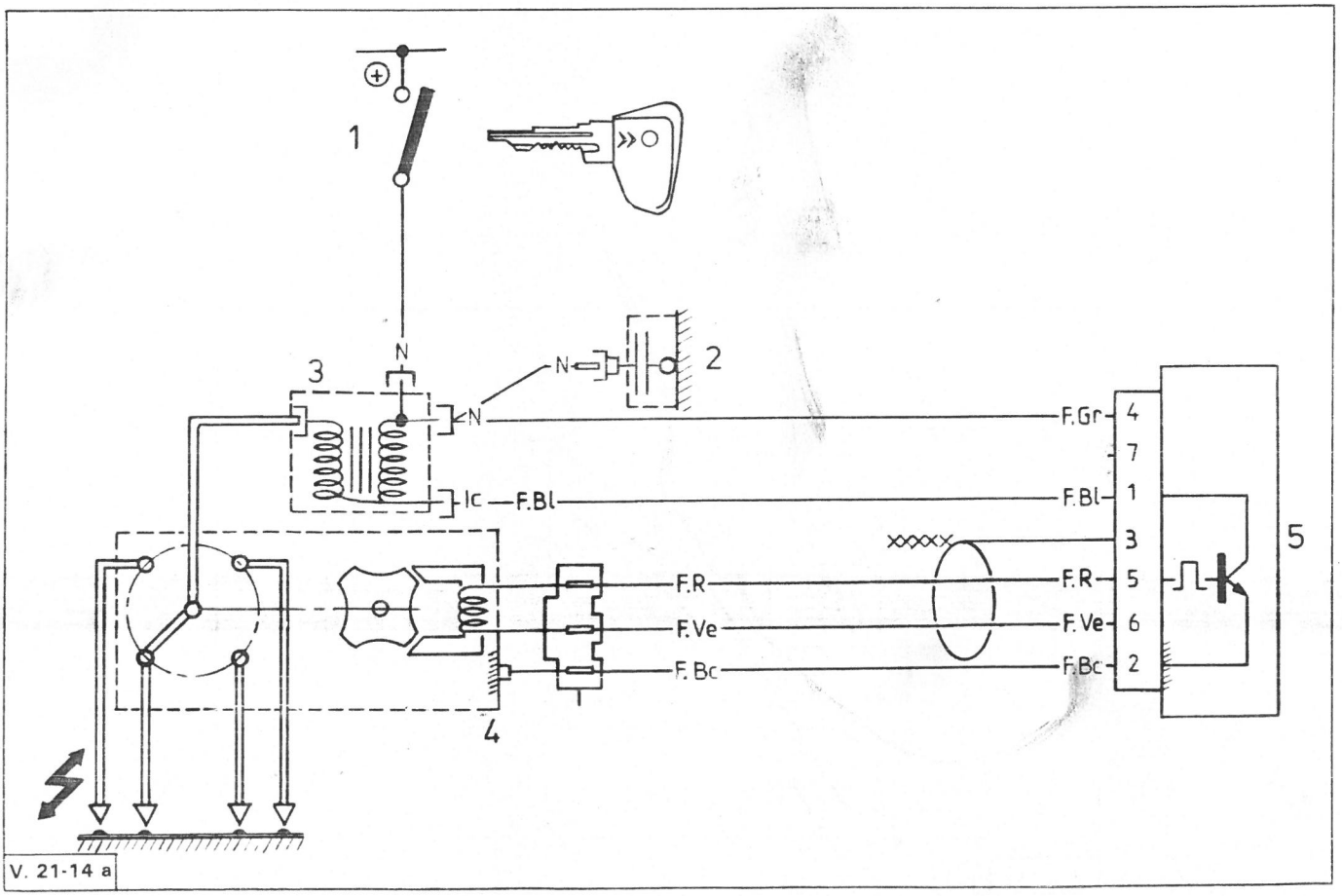

V. 21-14 a

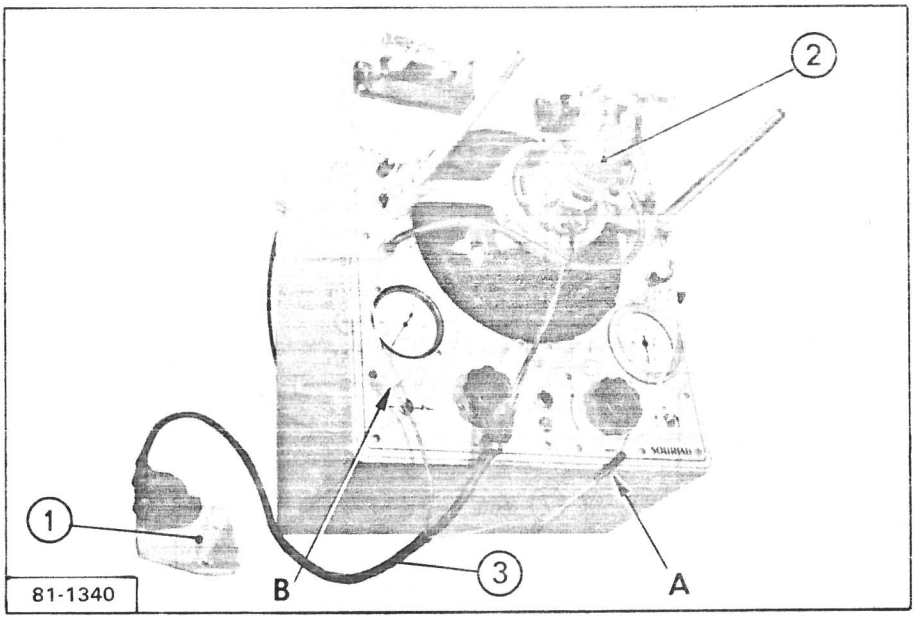
2
1
3
B
A
81-1340

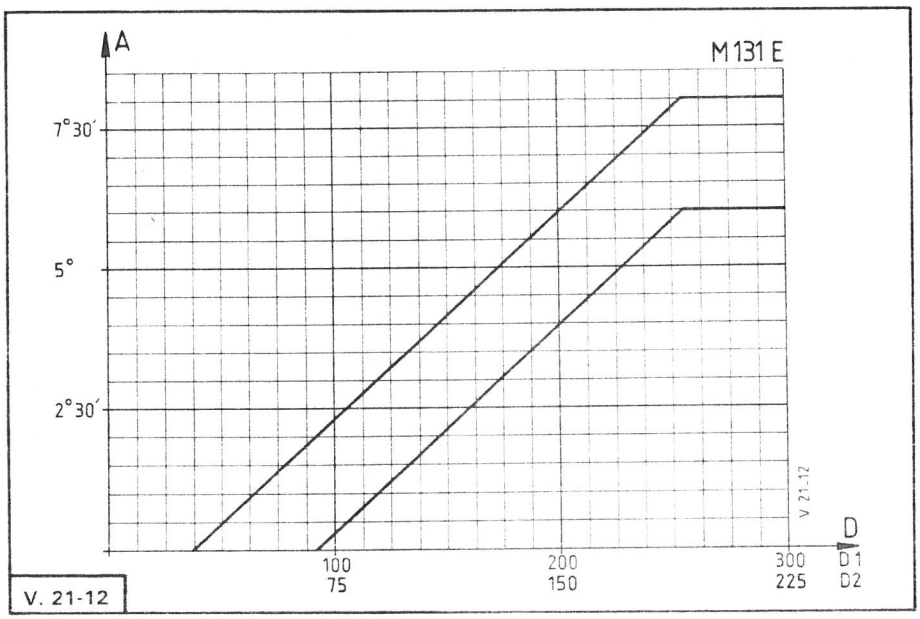
A
M 131 E
7°30'
5°
2°30'
V 21.12
D
100
75
200
150
300
225
D1
D2
V. 21-12

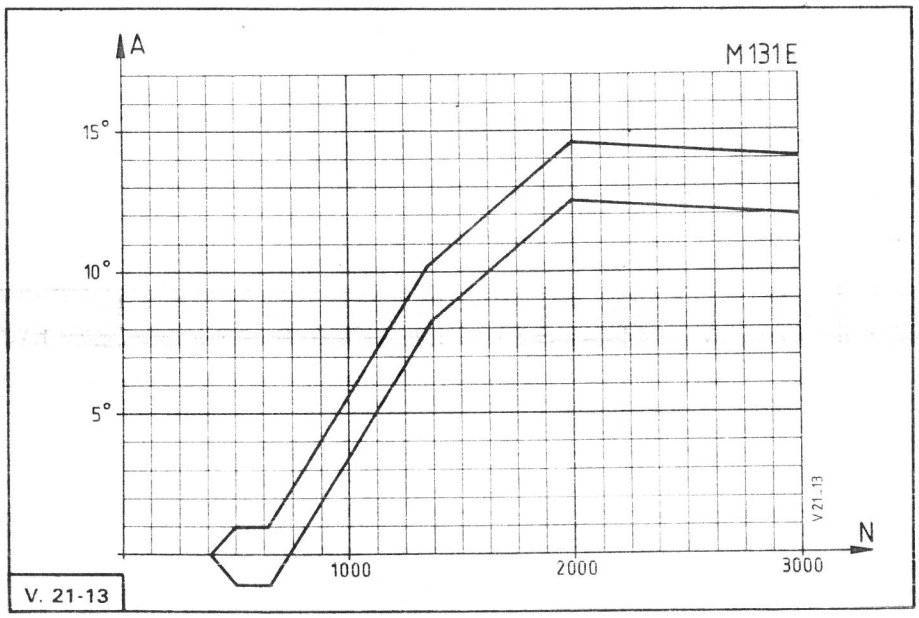
A
M 131 E
15°
10°
5°
V 21.13
N
1000
2000
3000
V. 21-13

CHECKING A MAGNETIC TRIGGERING DISTRIBUTOR ON A TEST BENCH

To check a distrlbutor with magnetic triggering on a test bench it is essential to incorporate a transistorised module into the test circuit. Use the module and harness from the vehicle if the test bench is not so equipped. An ignition coil is not required.

Connecting the distributor to the test bench.

Connect the module (1), the distributor (2) and the harness (3) into the test circuit.
Feed 12 V supply to « + » by way of wire (A) (black terminal).
Connect the terminal « RUP » of the test bench to the lead (B) (colourless insulation) of the harness.
Carry out the checks on : the spark length, centrifugal and vacuum advance curves in the same manner as a contact breaker equipped distributor (adjust the advance curve as necessary).
The Dwell angle does not have to be checked since it will vary with the speed of rotation of the distributor.

Identification of the vacuum and centrifugal advance curve : M 131 E.

N : Distributor speed rpm
A : Advance in degrees
D : Vacuum
D1 : in millibars
D2 : in mm of Mercury

OPERATION
VD2. 220-0

CHECKING THE OIL PRESSURE

CHECKING THE OIL PRESSURE

1. Run the engine until the oil temperature is around 90° C (194°F).

2. Stop the engine.
Remove the spare wheel.
Remove *(from crankcase RH side)* oil-pressure switch (1).

3. Fit union 4043-T (copper gasket), fitted with pressure gauge 2279-T calibrated from 0 to 10 bars (0 to 150 psi) and connect a rev-counter.

4. Check the oil pressure :
Run the engine and bring its speed up to 4,000 rpm.
On a new engine the pressure must be 3 bar (43.5 psi).

NOTE : As the mileage increases, a progressive reduction of pressure can occur. It may reach 0.4 bar (6 psi).

5. Remove pressure gauge 2279-T , union 4043-T and rev-counter.

6. Fit oil-pressure switch (1).
Tightening torque : **2 da Nm (14.5 ft.lb)** (copper washer).
Connect the pressure-switch lead.

7. Check, and top up if necessary, the engine oil level.

78-481

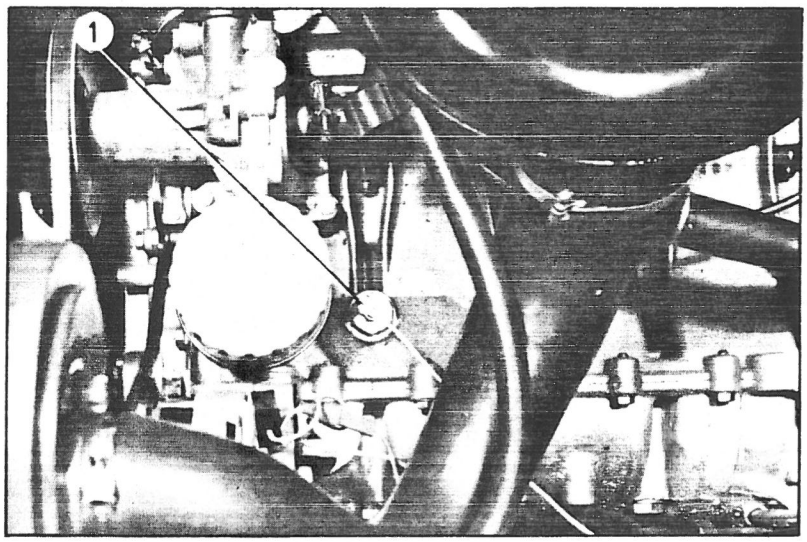

78-477

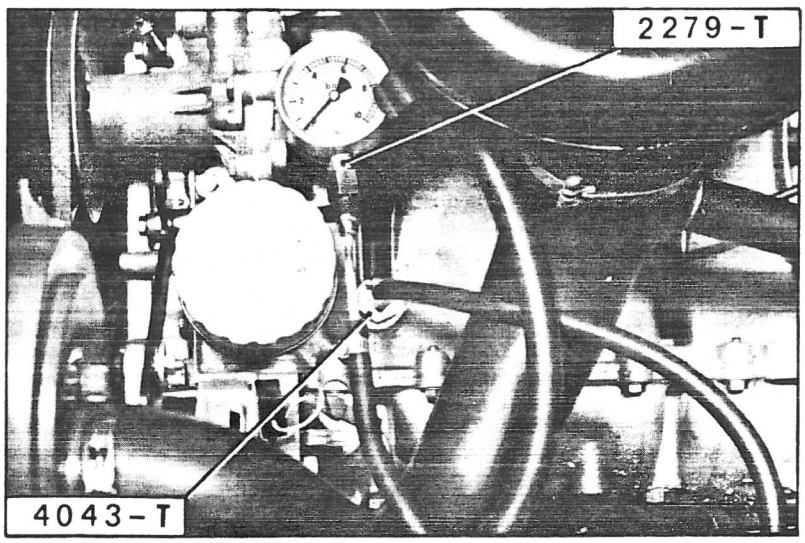

OPERATION
VD2. 312-00

CHARACTERISTICS AND SPECIAL FEATURES OF THE CLUTCH

CHARACTERISTICS

Diaphragm-type mechanism :

MAKE	TYPE
VERTO	180 DBR 255

Progressive-type disc :

MAKE	Number of springs and mark
VERTO	4 springs (pale green) 1 spring (light grey) 1 spring (yellow)

Dimensions of the linings : ..... 181.5 × 127 × 3.2 mm (7.14 × 5 × 0.12 in)
Disc hub : ..... 27 splines
Grade of the linings : ..... A 3 S on both faces
Thrust bearing : ..... ball type

SPECIAL FEATURES

Clearance between thrust bearing and release levers 1 to 1.5 mm (0.04 to 0.06 in)
Pedal free play : ..... 15 mm (0.6 in)

Checking the clutch free play :

Procedure :
Exert pressure (➡) on the fork. Then, the clearance at fork end (near release spring attachment) should be 3 to 4 mm (0.12 to 0.16 in), this corresponding to a 1 to 1.5 mm (0.04 to 0.06 in) clutch clearance *(slight play)* between the ball thrust bearing and release levers, and to a clutch pedal free movement of 15 mm (0.6 in).

V.33-4

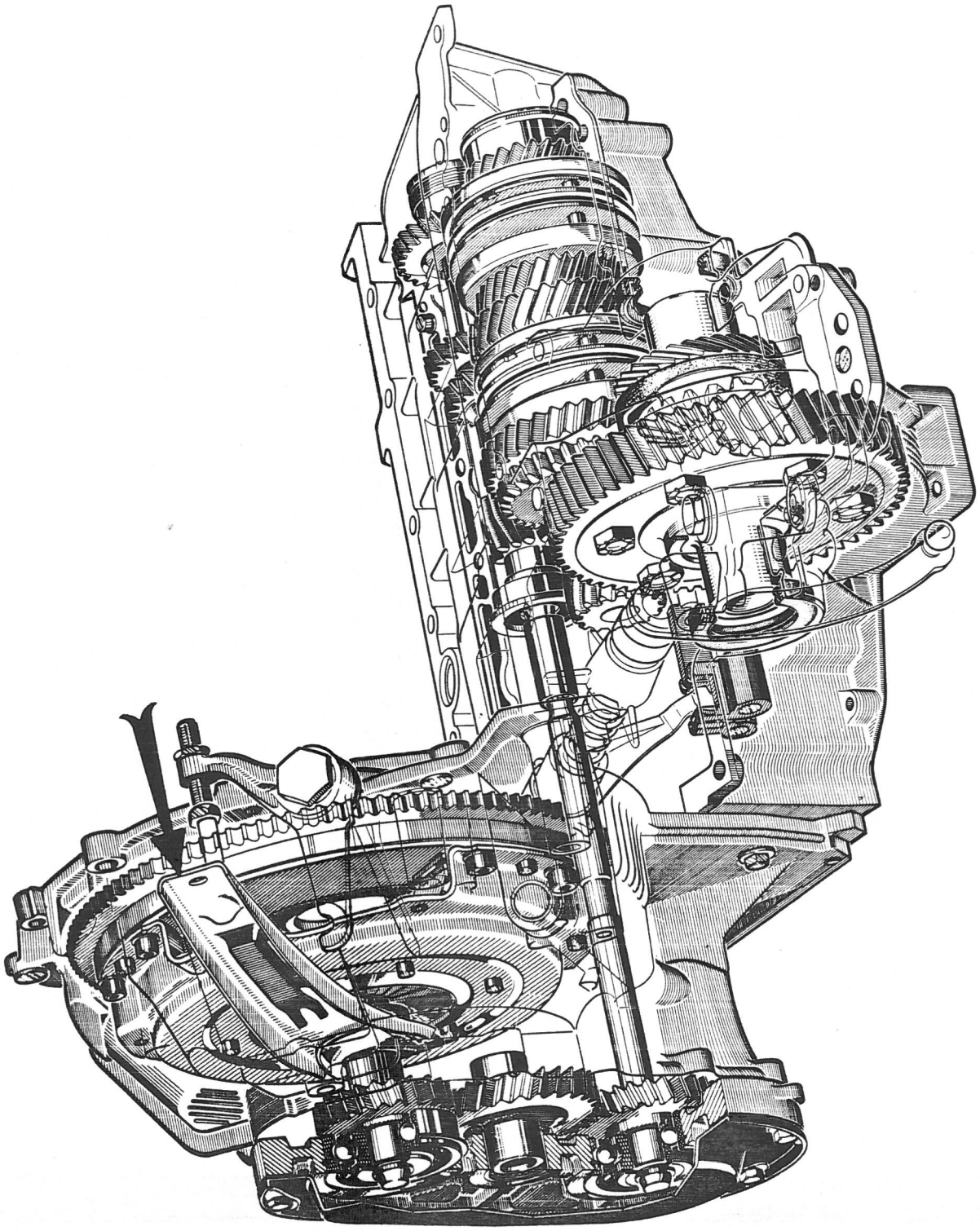

813-1 (1)

OPERATION
VD2. 330-00

CHARACTERISTICS AND SPECIAL FEATURES OF THE GEARBOX

4 SPEED GEARBOX

I. CHARACTERISTICS

1. Gear ratios :

VISA SUPER - VISA SUPER « E » - VISA II SUPER « E » - VISA II L

NOTA : Speeds are given for vehicles equipped with 145 SR 13 XZX tyres, the rolling circumference of which is 1.720 m (5 ft 7.7 in) under load.

VISA SUPER

Transfer gear ratio	Gears	Gearbox ratios	Final drive ratio	Reduction ratios		Speed at 1000 rpm kph (mph)
				Gearbox	Overall	
(27/34) 1.259	1st	(12/37) 3.083	(16/57) 3.562	10.984	13.832	7.460 (4.636)
	2nd	(17/31) 1.823		6.496	8.180	12.615 (7.840)
	3rd	(26/31) 1.192		4.248	5.348	19.293 (11.990)
	4th	(29/24) 0.827		2.948	3.712	27.796 (17.275)
	Reverse	(12/21X21/34) 2.833		10.093	12.710	8.119 (5.045)
Speedometer drive ratio : 22 X 38						

VISA SUPER « E » - VISA II SUPER « E » and VISA II L

Transfer gear ratio	Gears	Gearbox ratios	Final drive ratio	Reduction ratios		Speed at 1000 rpm kph (mph)
				Gearbox	Overall	
(27/34) 1.259	1st	(12/37) 3.083	(16/57) 3.562	10.984	13.832	7.460 (4.636)
	2nd	(17/28) 1.647		5.867	7.388	13.966 (8.678)
	3rd	(32/35) 1.093		3.896	4.906	21.032 (13.069)
	4th	(36/27) 0.750		2.671	3.364	30.672 (19.059)
	Reverse	(12/21X21/34) 2.833		10.093	12.710	8.119 (5.045)
Speedometer drive ratio : 22 X 37						

VISA SUPER « X » and VISA II SUPER « X »

NOTE : Speeds are given for vehicles equipped with 155/70 SR 13 XZX tyres whose the rolling circumference is 1.670 metres (5 ft 5.6 in) under load.

Transfer gear ratio	Gears	Gearbox ratios	Final drive ratio	Reduction ratios		Speed at 1000 rpm kph (mph)
				Gearbox	Overall	
(27/34) 1.259	1st	(12/37) 3.083	(15/61) 4.066	12.538	15.789	6.345 (3.943)
	2nd	(17/28) 1.647		6.698	8.434	11.879 (7.381)
	3rd	(32/35) 1.093		4.447	5.601	17.889 (11.116)
	4th	(36/27) 0.750		3.050	3.840	26.088 (16.210)
	Reverse	(12/21X21/34) 2.833		11.522	14.509	6.905 (4.291)
Speedometer drive ratio : 22 X 37						

IMPORTANT NOTE : In case of prolonged towing, lift the front wheels from the ground to prevent eventual seizure of the gearbox.

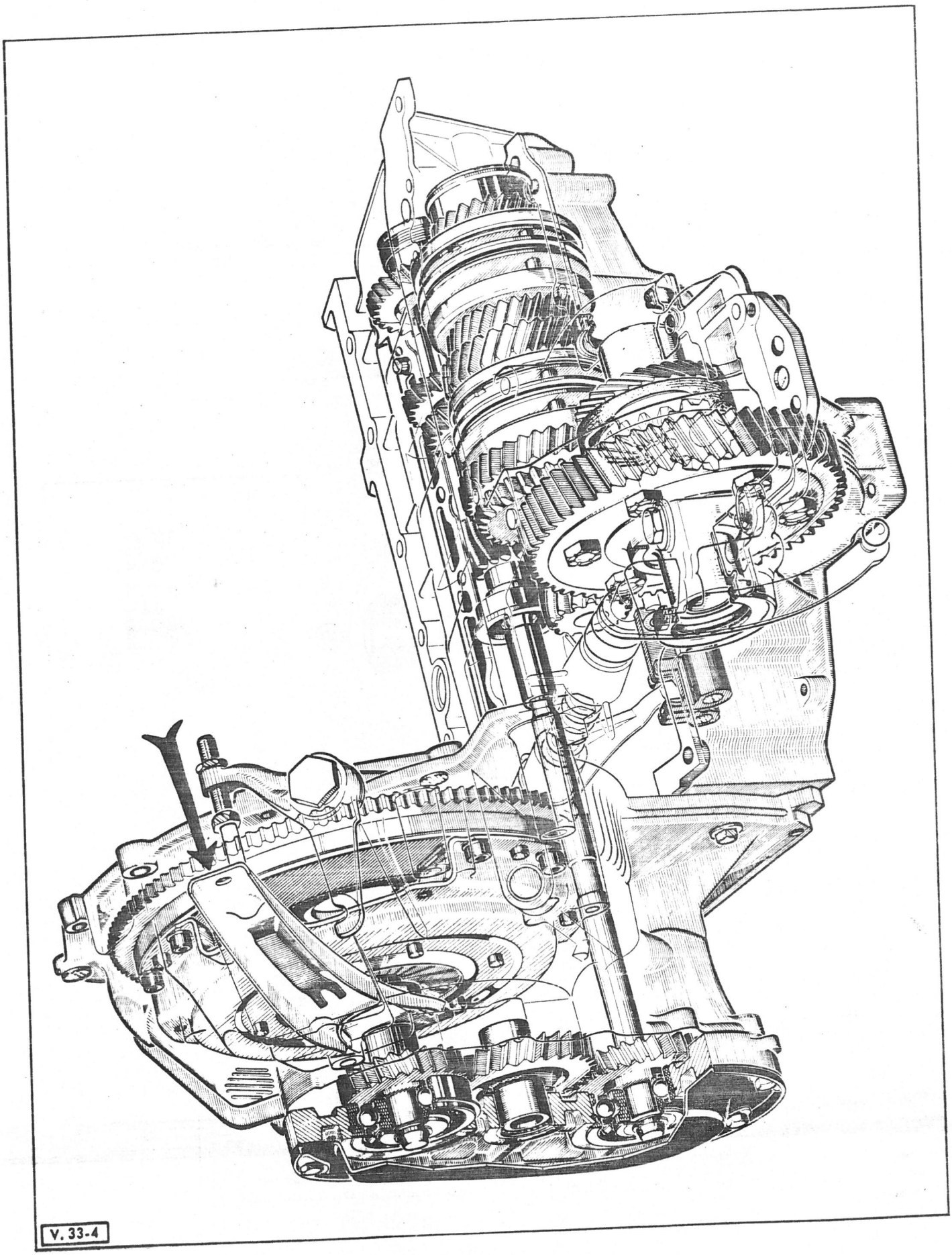

V. 33-4

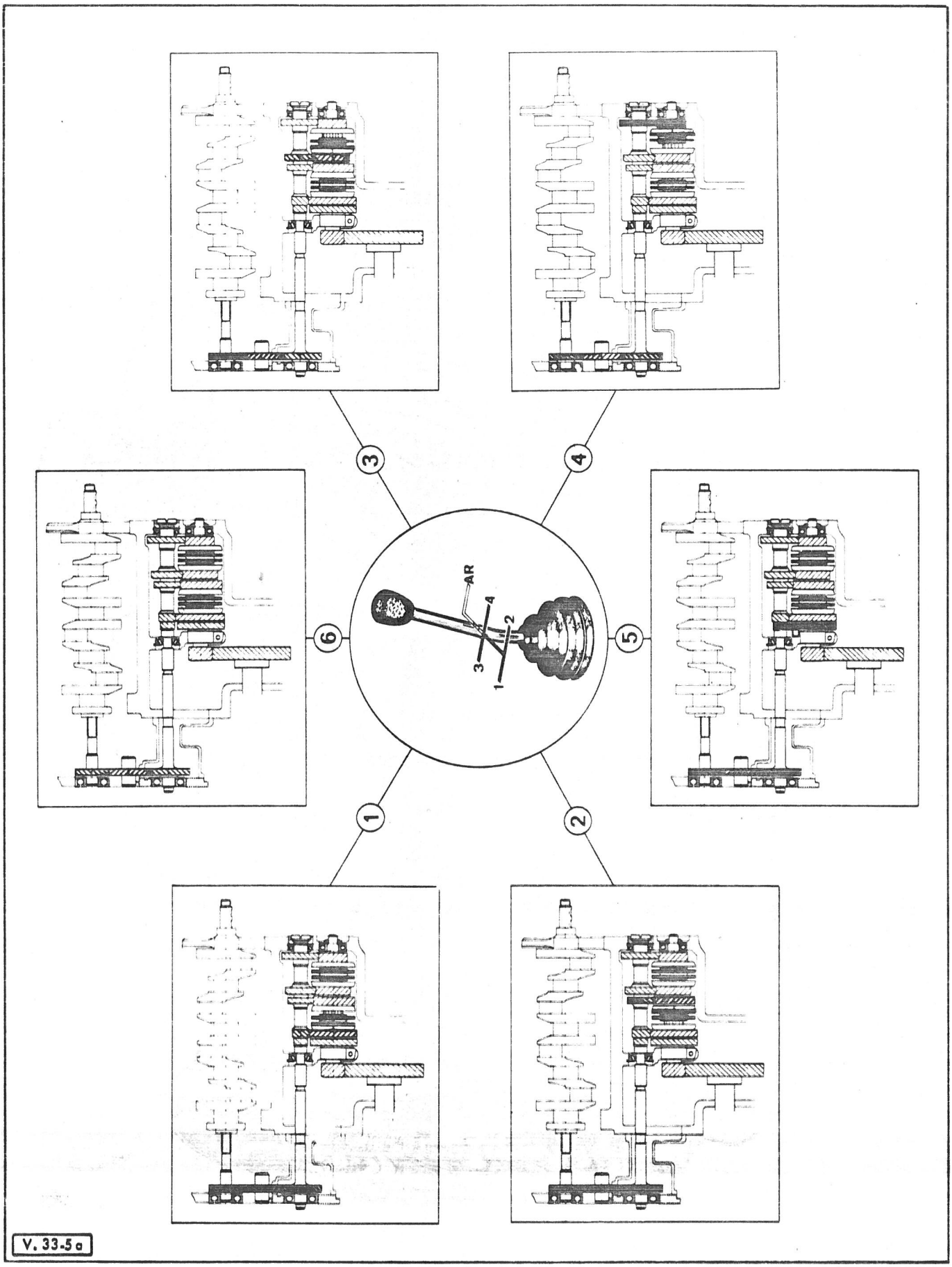

V. 33-5 a

2. Lubrication :

- Common lubrication of engine and gearbox.
  Oil : TOTAL GOLD or TOTAL 20/50 (GB) - TOTAL GTS 15 W/40 (Europe except GB, Spain and France) - TOTAL GTS 15 W 40 or TOTAL GTi Route et Ville. 10 W 30 (France).

3. Gear change :

Floor mounted gear lever (with european gear diagram).

II. SPECIAL FEATURES

The primary shaft is fitted into the crankcase running in ball bearings.
- End float of the primary shaft : pre load obtained by tightening the nut to **2 m.daN (14.5 ft lbs)**, then slacken and tighten to **0.9 m.daN (6.5 ft lbs).**

The secondary shaft is fitted to the gearbox half casing as follows :
- at LH end : in thin walled half-bearings, force feed lubrication,
- at RH end : in ball bearings.

The differential bearings are fitted with thin walled half bearings with force feed lubrication.

III. GEAR SEQUENCE

Figure (1) : 1st gear
Figure (2) : 2nd gear
Figure (3) : 3rd gear
Figure (4) : 4th gear
Figure (5) : Reverse
Figure (6) : Neutral

5-SPEED GEARBOX

I. CHARACTERISTICS

1. Gear ratios :

NOTE : Speeds are given for vehicles equipped with 160/65 R 340 TRX tyres, the rolling circumference of which is 1.670 metres (5 ft 5.6 in) under load.

Transfer gear ratio	Gears	Gearbox ratios	Final drive ratio	Reduction ratios		Speed at 1000 rpm kph (mph)
				Gearbox	Overall	
(27/34) 1.259	1st	(12/37) 3.083	(15/58) 3.866	11.918	15.004	6.678 (4.150)
	2nd	(17/31) 1.823		7.047	8.872	11.293 (7.017)
	3rd	(26/31) 1.192		4.608	5.801	17.272 (10.732)
	4th	(28/35) 0.928		3.587	4.516	22.187 (13.786)
	5th	(39/28) 0.717		2.771	3.488	28.727 (17.850)
	Reverse	(12/34) 2.833		10.952	13.788	7.267 (4.515)
Speedometer drive ratio : 22 × 37						

IMPORTANT NOTE : In case of prolonged towing, lift the front wheels from the ground to prevent eventual seizure of the gearbox.

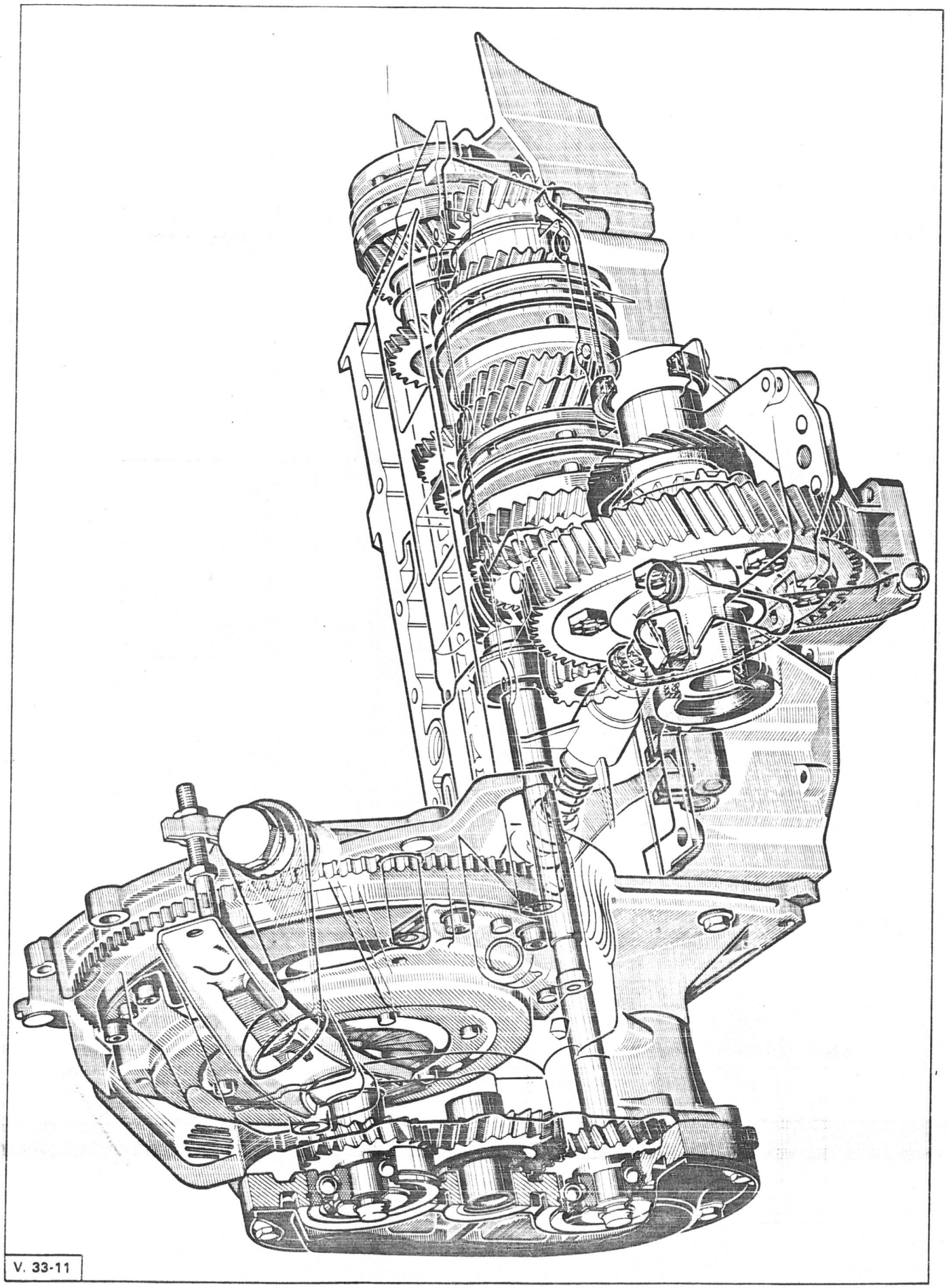

V. 33-11

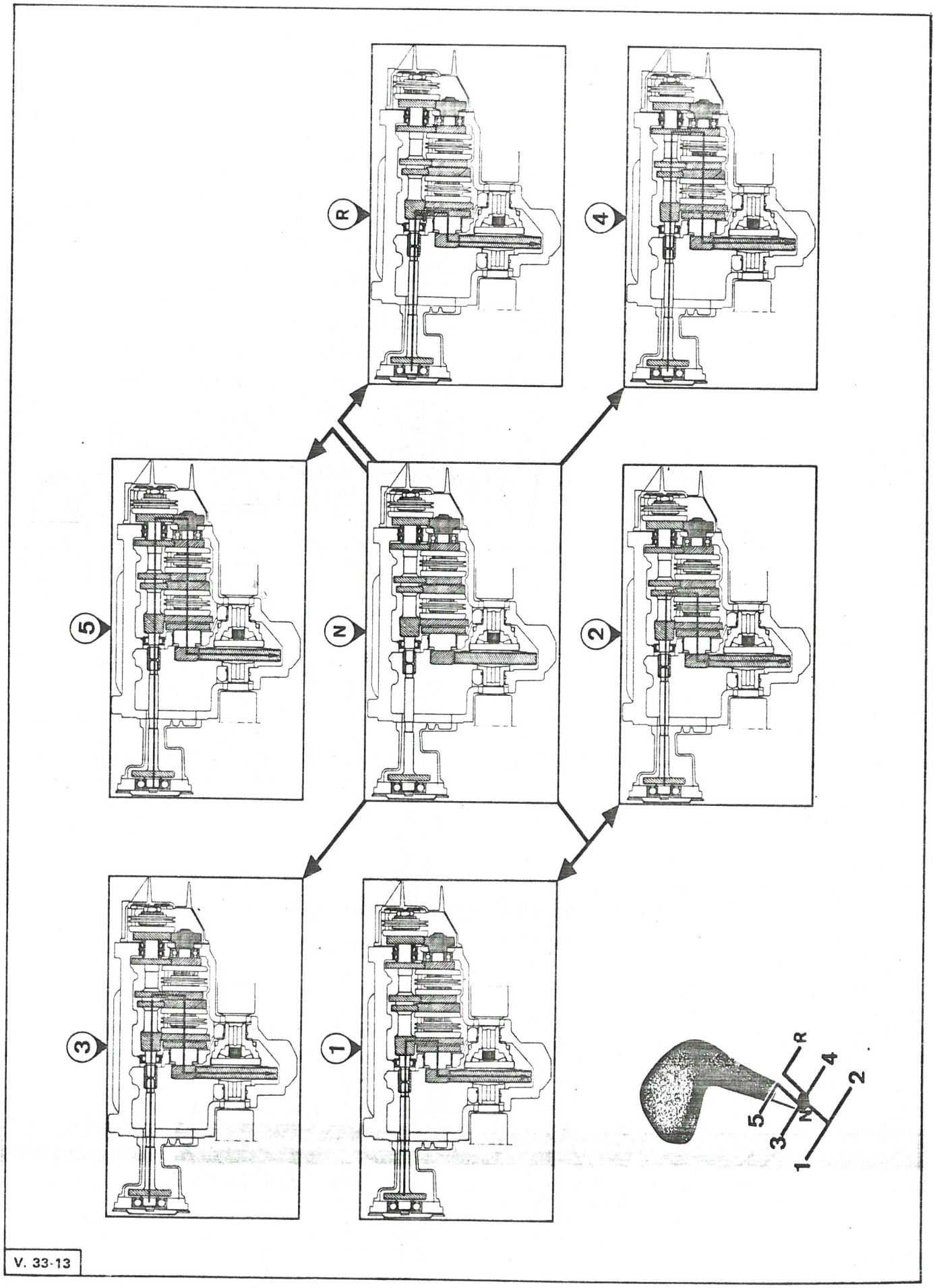

V. 33-13

2. Lubrication :

Common lubrication of engine and gearbox :

Oil : TOTAL GOLD or TOTAL 20/50 (GB) - TOTAL GTS 15 W 40 (Europe except GB, Spain and France) - TOTAL GTS 15 W 40 or TOTAL GTi Route et Ville 10 W 30 (France).

3. Gear change :

Floor mounted gear lever (with european gear diagram).

II. SPECIAL FEATURES

Primary shaft :

Lenghtened to enable the fitting of 5 th speed pinion and 5 th/Reverse synchronizer, the primary shaft on 1 st gear end rotates in a needle roller bearing, held in place by a ring. On 5 th speed pinion end, two opposed taper-roller bearings support the shaft. The outer race of these bearings butts against a solid washer fitted into one of the housings of the gearbox case ensuring the positive location of the shaft.

In addition, to allow lubrication of the taper roller bearings and 5 th speed pinion (the only pinion in the gearbox to be fitted with a seal) the shaft has an axial drilling and two transverse drillings to distribute the oil.

Secondary shaft :

The secondary shaft has at its end helical splines, where it fits into 5 th pinion.

III. GEAR SEQUENCE

Figure (1) : 1 sr gear
Figure (2) : 2 nd gear
Figure (3) : 3 rd gear
Figure (4) : 4 th gear
Figure (5) : 5 th gear
Figure (R) : Reverse gear
Figure (N) : Neutral

OPERATION
VD2. 330-0

CHECKING AND ADJUSTING THE GEARBOX CONTROL

CHECKING AND ADJUSTING THE GEARBOX CONTROL

1. With gear level set in neutral position, lower section **A** should stand vertically.

2. Adjusting the transverse shifting :
To alter the lever setting in the transverse direction, use link rod (1).
The lever should not bear on the seat when 2nd gear or reverse is engaged.

3. Adjusting the fore-and-aft shifting :
To alter the lever setting in the fore-and-aft direction, use link rod (2).

4. Pre-setting link-rod (2) :
The ball-joint covers should be correctly positioned (in the same plane). Distance between centres = 172 ± 1 mm (6.77 ± 0.04 in).

5. Pre-setting link rod (1) :
A 77° angle should exist between the two ball-joint axes. Distances between centres = 80 ± 1 mm (3.15 ± 0.04 in).

6. When fitting a new bearing in the console, smear it with KLUBER PROBA 270 grease.

All ball-joints and articulating points of the lever must be lubricated with TOTAL MULTIS MS grease.

78-1090

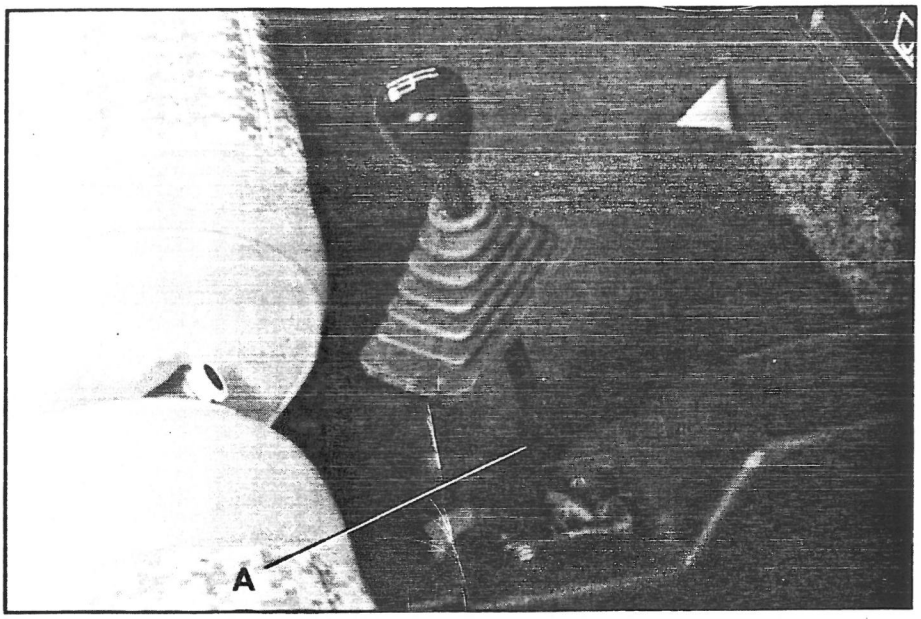

78-1017

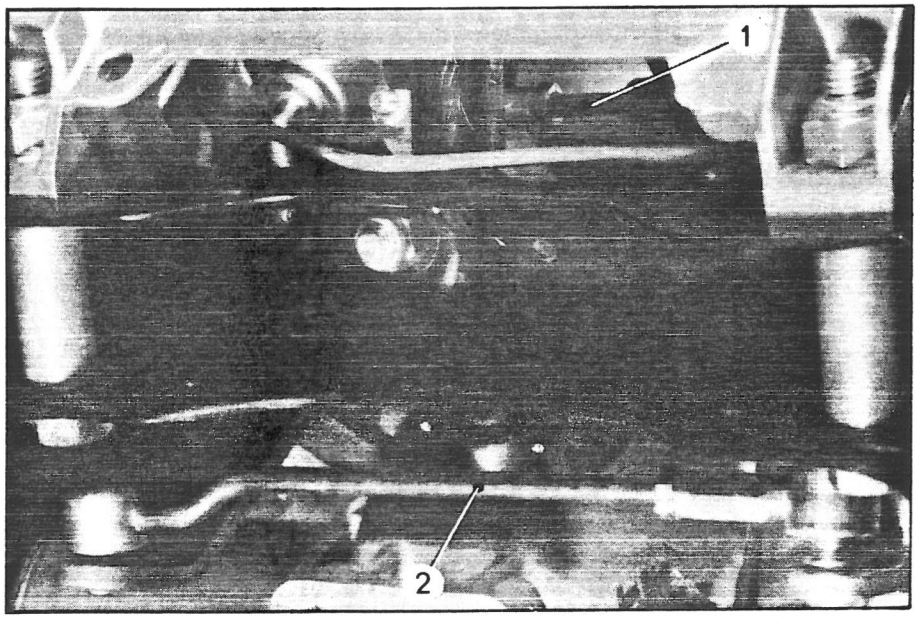

OPERATION
VD2. 372-00

CHARACTERISTICS AND SPECIAL FEATURES OF THE DRIVE SHAFTS

CHARACTERISTICS

- Tri-axe constant velocity joint, sliding on inner splines, at gearbox end.
- Tri-axe constant velocity joint, not sliding, at wheel end.

SPECIAL FEATURES

Fitting :

On fitting, take care not to damage the oil seal at gearbox outlet. **An oil seal in bad condition may entail the complete flowing out of the oil for the engine and gearbox.**

Grease :

- Make : ..... CITROËN GL 245 MO

Mandatory tightening torque (with torque spanner) :

- Locknut securing the drive shaft to the hub : ..... **23 to 26 da Nm**
  (locking : by knocking the metal over) **(166 to 188 ft. lb)**

V.37-2

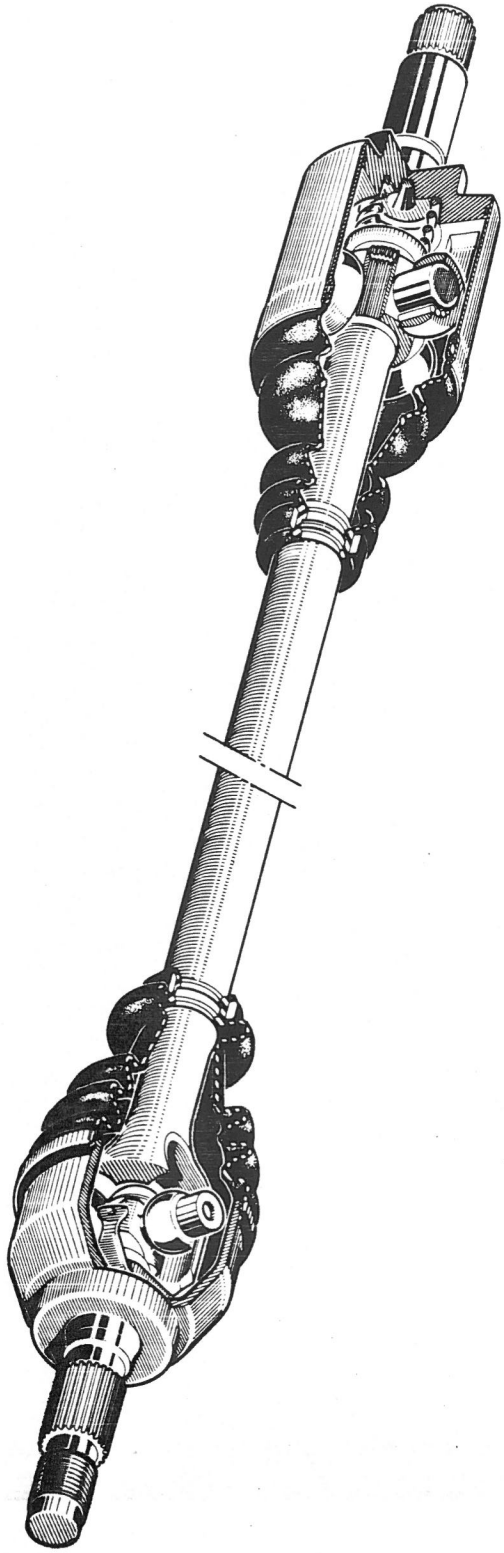

813-1 (I)

OPERATION
VD2. 410-00

CHARACTERISTICS AND SPECIAL FEATURES OF THE FRONT AXLE

I. CHARACTERISTICS

Conditions required for check and adjustment :
With vehicle empty, in running order, 5 litres (8.8 Imp. pts) of petrol in tank, check the following :
- The front height which should be 200.2 ± 10 mm (7.88 ± 0.4 in). The measure should be taken from "**A**" area, under the vehicle, to the ground.
- The rear height (see Op. VD2. 420-00).

Alignment (adjustable), toe-in :	1 ± 1 mm
Castor (non-adjustable) :	1°33' ± 30'
Swivel pin inclination (non-adjustable) :	9°20' ± 40'
Camber (non-adjustable) :	0°34' ± 30'

II. SPECIAL FEATURES

- Wheel alignment adjustment is carried out by means of the steering link rods, LH and RH.
- Ball-joints for lower arms and link rods are non-removable.

V 43-5

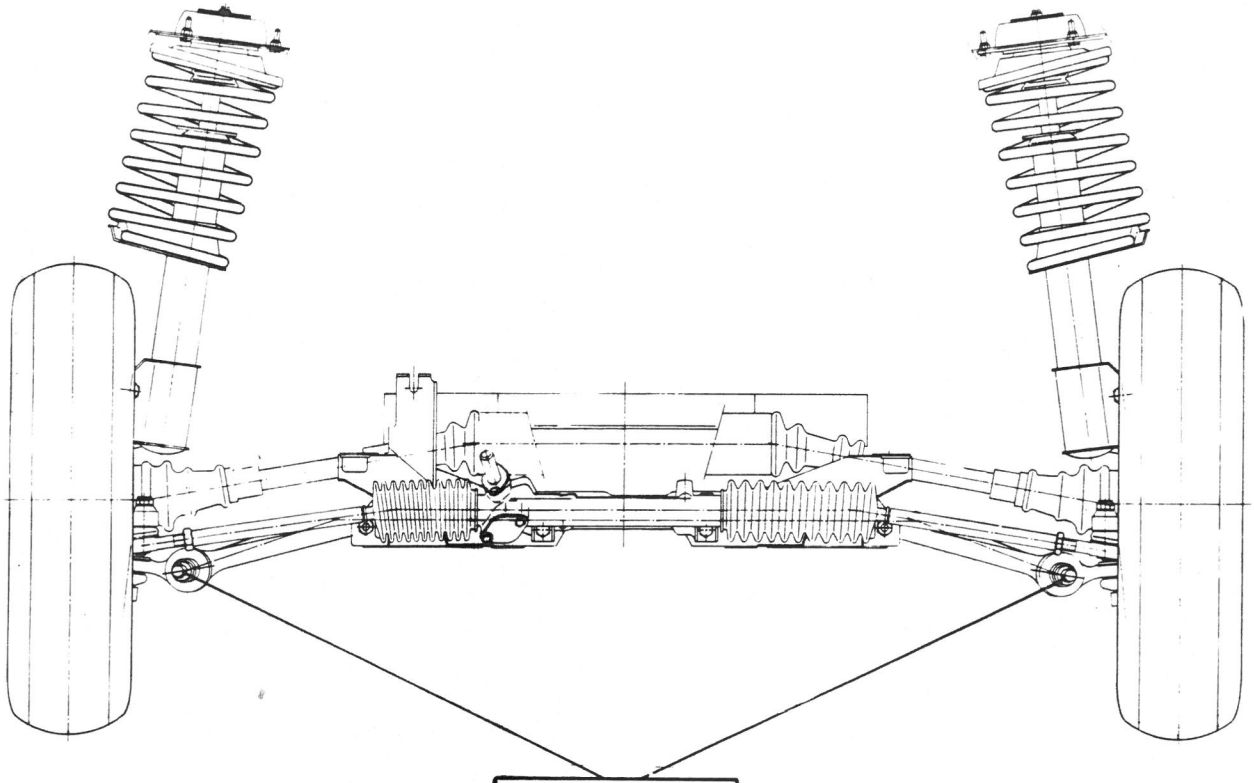

V 41-1

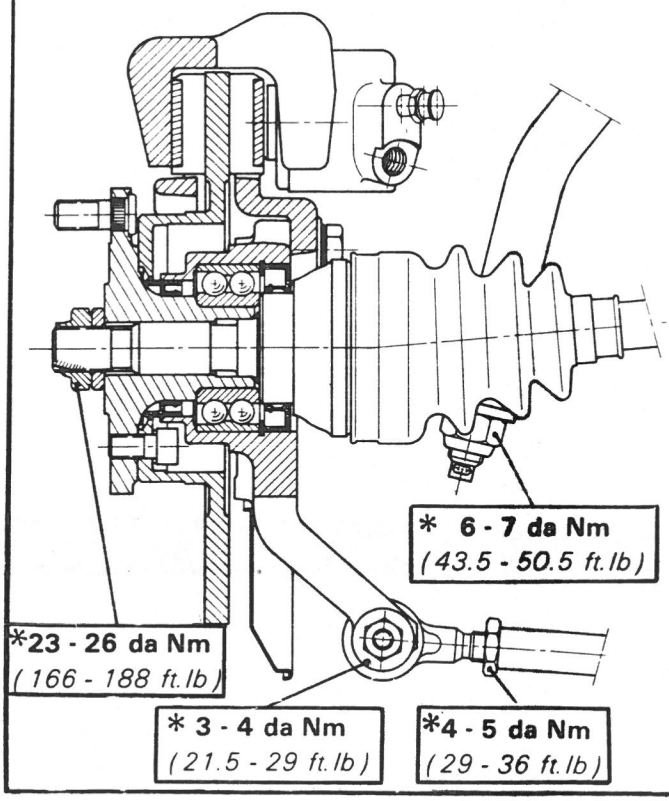

78-695

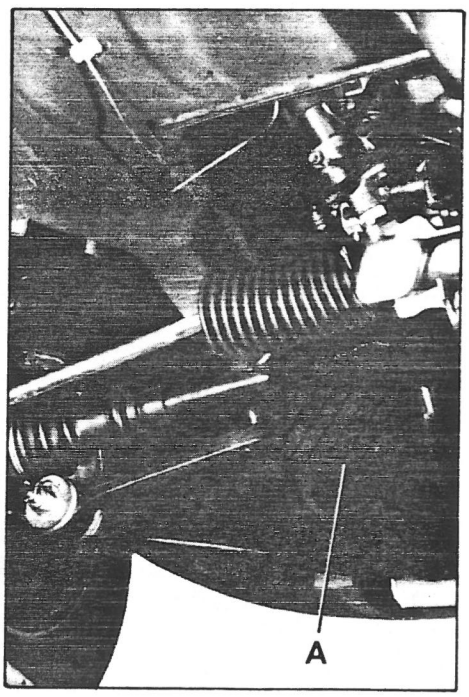

OPERATION
VD2. 410-0

CHECKING AND ADJUSTING THE FRONT AXLE

CHECKING THE ALIGNMENT OF THE FRONT WHEELS

Conditions required for the check :

With vehicle empty, in running order, 5 litres (**8.8** Imp. pts) of petrol in tank, check the following :
- the front height which should be 200.2 ± 10 **mm** (7.88 ± 0.4 in). The measure should be taken from "A" area, under the vehicle, to the ground.
- the rear height *(See Op. VD2. 420-0).*

The checking operation can be carried out by using a mechanical or optical equipment, with the vehicle standing on a flat level surface.

Toe-in : 1 ± 1 mm

ADJUSTING THE WHEEL ALIGNMENT

The adjustment is obtained by rotating tie-rods (1) of the steering link rods, LH and RH, once nuts (2) have been loosened.

IMPORTANT : The lengthes of visible thread at « a », LH and RH side, should be even to within 2 mm.
Tightening torque for nuts (1) : 4 to 5 da Nm (29 to 36 ft.lb).

78-695

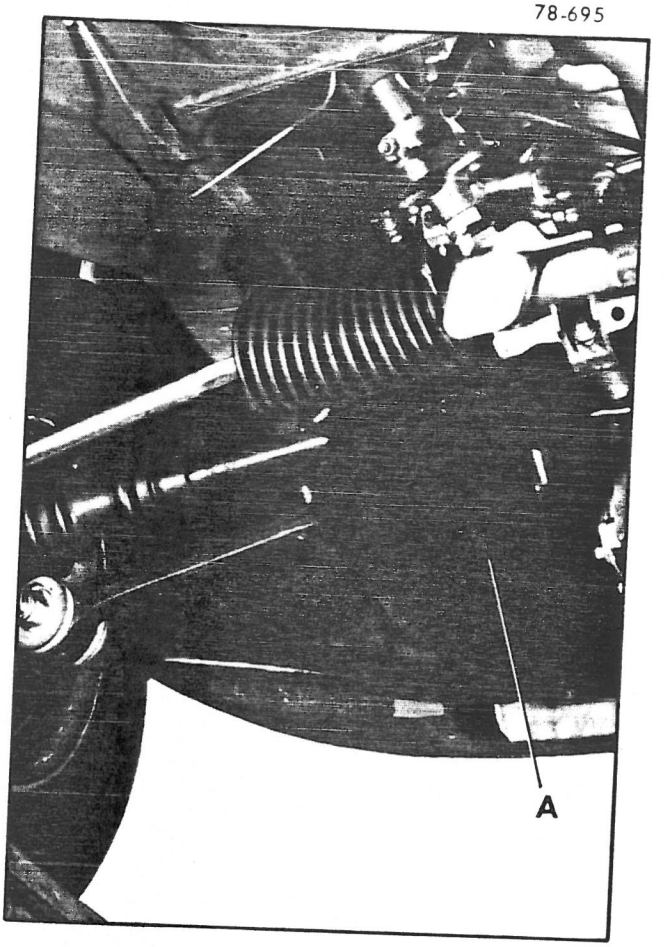

78-161

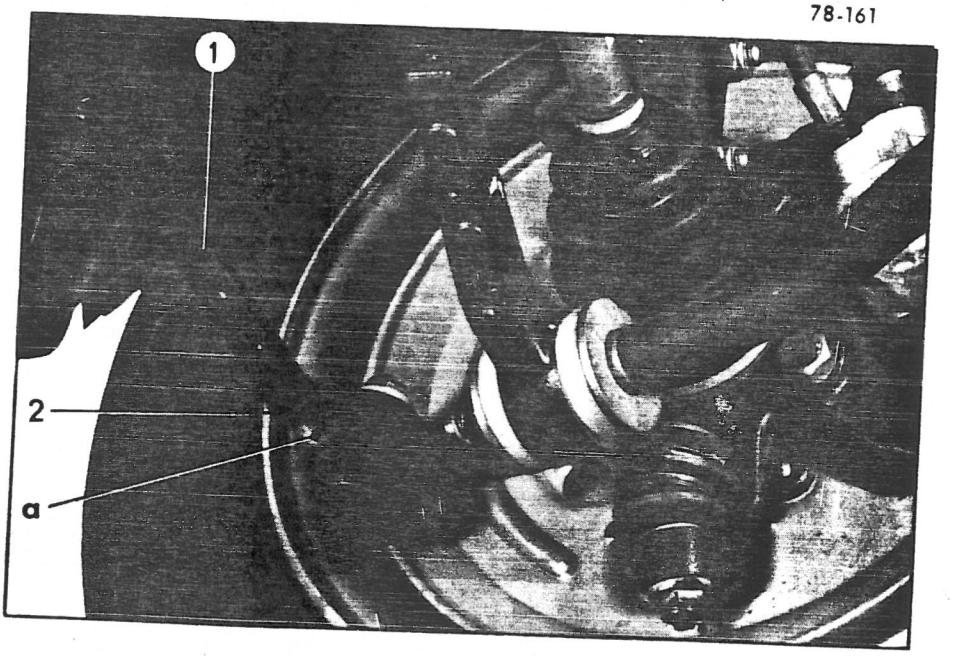

OPERATION
VD2. 420-00

CHARACTERISTICS AND SPECIAL FEATURES OF THE REAR AXLE

CHARACTERISTICS

Conditions required for check and adjustment :

With vehicle empty, in running order, 5 litres (8.8 Imp. pts) of petrol in tank, check the following :
- the rear height which should be 306 ± 10 mm (12.04 ± 0.4 in) from the centre of the arm outer articulating point on body to the ground,
- the front height *(See Op. VD2. 410-00).*

Wheel alignment (adjustable) : toe-in : ..... 2.5 ± 1 mm
Camber (non-adjustable) : *negative* camber (*inward* tilt of the wheel at the top) : ..... 1°30' ± 30'

SPECIAL FEATURES

Adjusting the hub bearings :

Clearance between nut and thrust washer after positioning the bearings : ..... 0.01 to 0.04 mm

Procedure :

Tighten the stub axle nut to **3 to 4 da Nm (21.5 to 29 ft.lb), allowing the drum to rotate.**

Loosen the nut.

By hand force only, bring the nut into contact with bearing thrust washer, then stop the nut in that position.

Use a tool with rounded end to avoid cutting the locking collar.
Support the nut during the operation.

V. 42-3

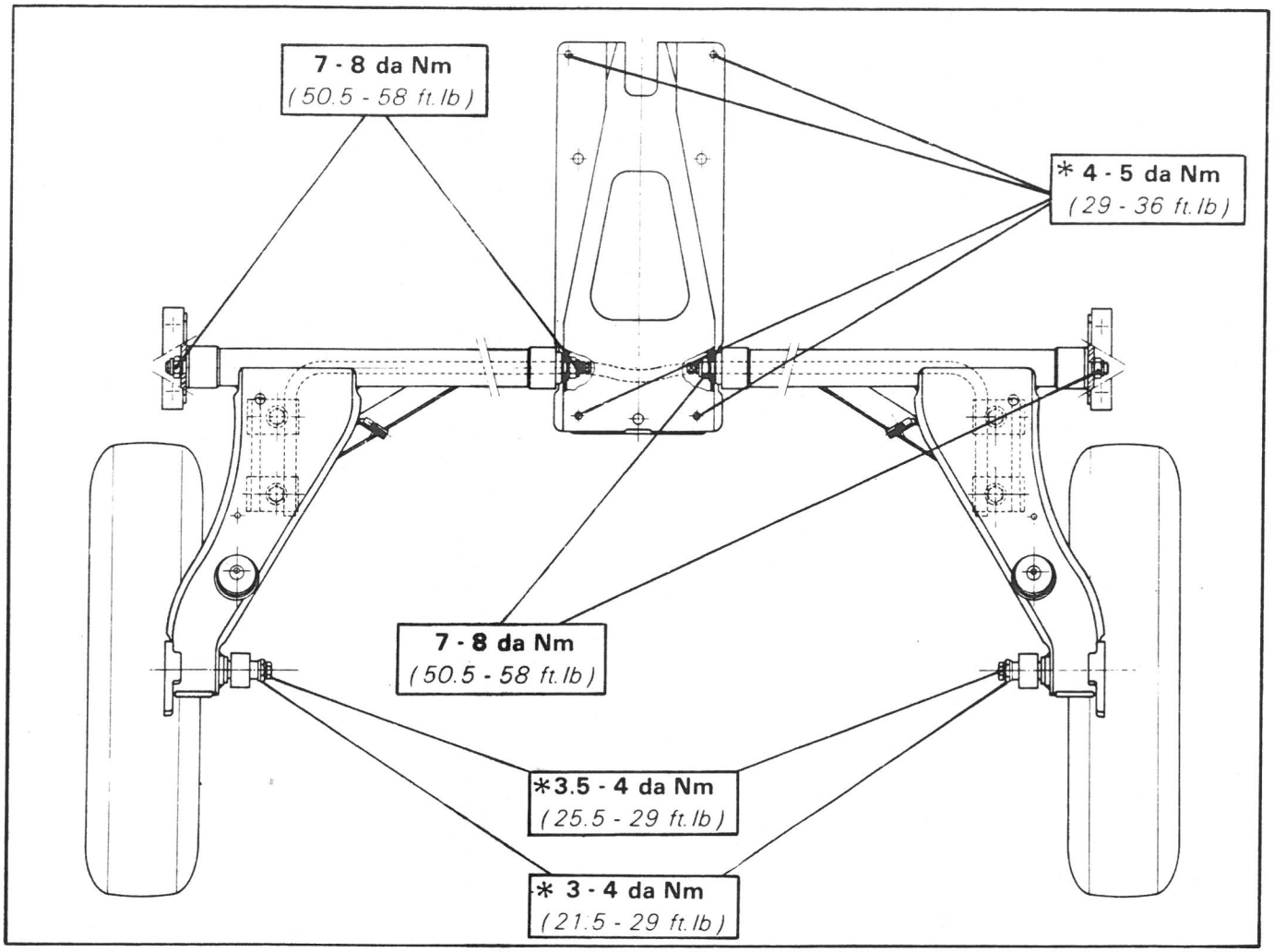
7 - 8 da Nm
(50.5 - 58 ft.lb)
* 4 - 5 da Nm
(29 - 36 ft.lb)
7 - 8 da Nm
(50.5 - 58 ft.lb)
*3.5 - 4 da Nm
(25.5 - 29 ft.lb)
* 3 - 4 da Nm
(21.5 - 29 ft.lb)

V. 42-2

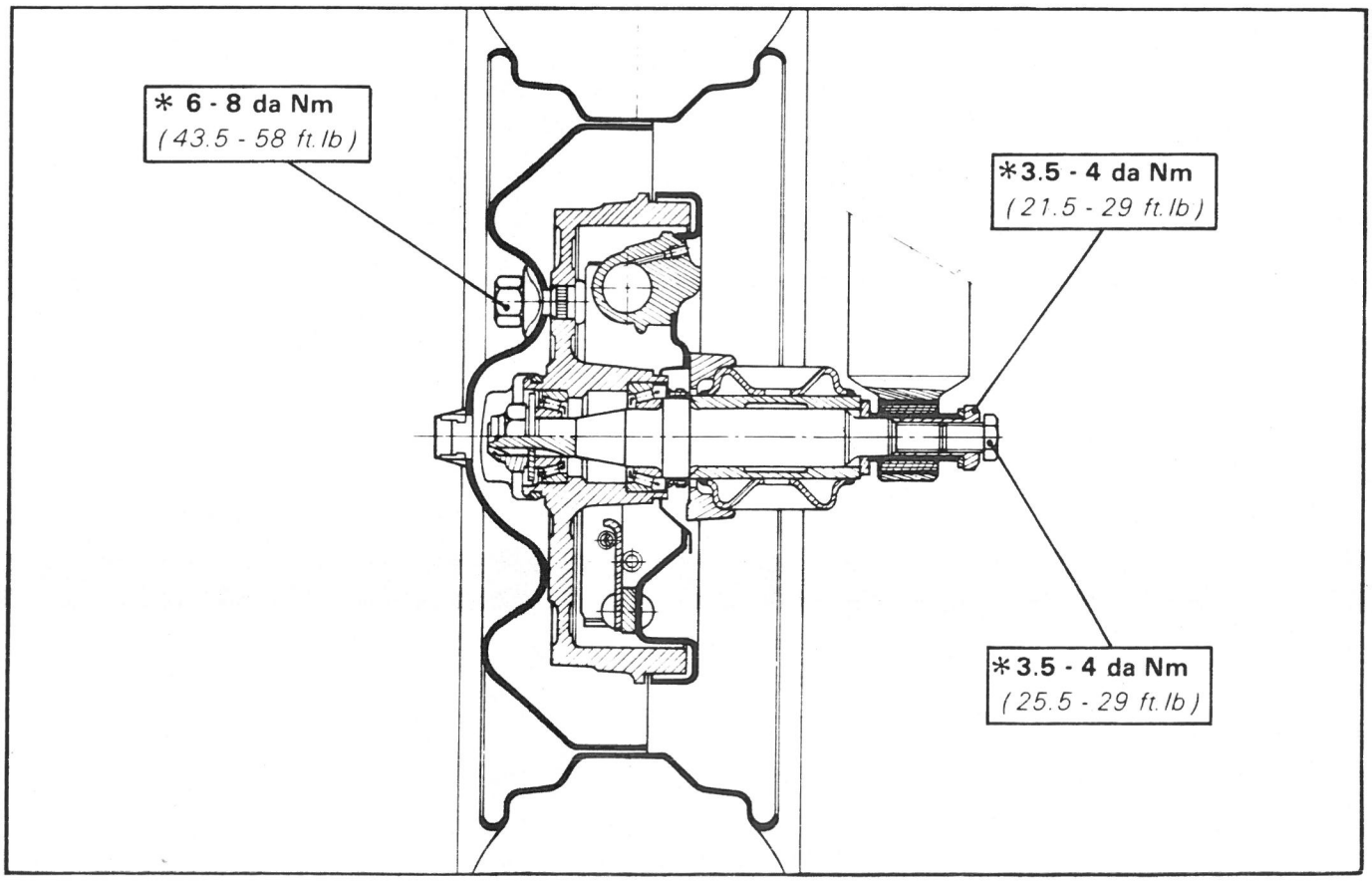
* 6 - 8 da Nm
(43.5 - 58 ft.lb)
*3.5 - 4 da Nm
(21.5 - 29 ft.lb)
*3.5 - 4 da Nm
(25.5 - 29 ft.lb)

OPERATION
VD2. 420-0

CHECKING AND ADJUSTING THE REAR AXLE

CHECKING THE WHEEL ALIGNMENT

Conditions required for the check :

With vehicle empty, in running order, 5 litres (8.8 Imp. pts) of petrol in tank, check the following :
- the rear height which should be 306 ± 10 mm(12.04 ± 0.4 in) from the centre of the arm outer articulating point on body to the ground,
- the front height *(See Op. VD2. 410-0).*

The checking operation can be carried out by using a mechanical or optical equipment, with the vehicle standing on a flat level surface.

Toe-in : 2.5 ± 1 mm

ADJUSTING THE WHEEL ALIGNMENT

The adjustment is obtained by shifting centre support (1) lengthwise.

Slacken each of the four screws (➡) by one full turn.

Actuate tie-rod [B] of bracket [8.0527-T] to bring centre support (1) forwards or rearwards.

A 1 mm displacement of centre support (1) entails a change of 1.5 mm, approximately, in the wheel alignment.

Tighten the screws (➡) **to 4 to 5 da Nm (29 to 36 ft. lb).**

78-731

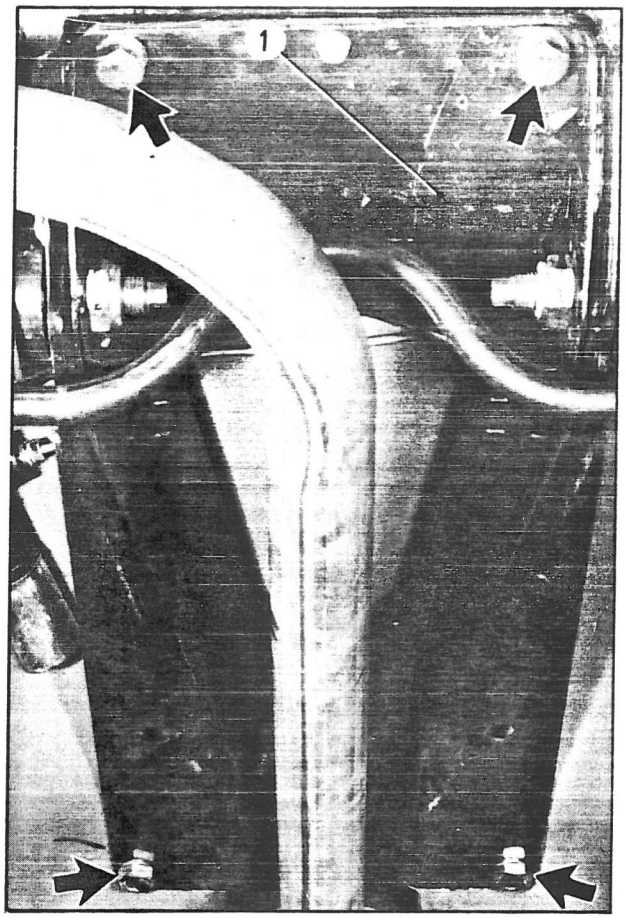

78-210

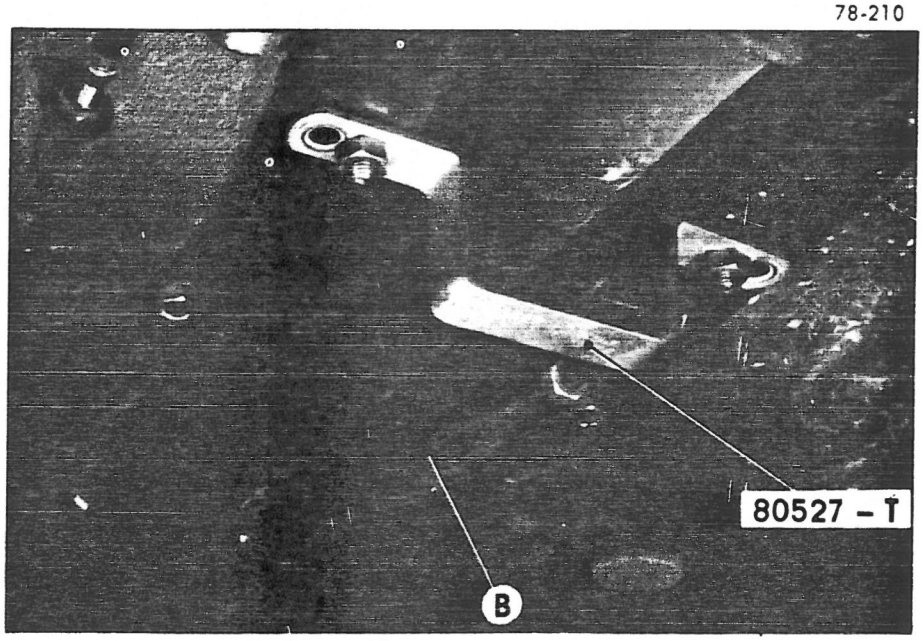

OPERATION
VD2. 430-00

CHARACTERISTICS AND SPECIAL FEATURES OF THE SUSPENSION

FRONT SUSPENSION

I - CHARACTERISTICS

« MAC-PHERSON strut » type, with independent wheels. It comprises, on each side, a stub-axle swivel with an integrated shock absorber and a concentric coil spring. An anti-roll bar couples the two components.

II - SPECIAL FEATURES

Anti-roll bar dia. : ..... 22 mm (0.86 in)

The anti-roll bar fitting arrangement must strictly be observed (see view as per F).

On fitting :
- Grease anti-roll bar bearings (2) with KLUBER grease, ref. R.P. 79-01-973-067.
- Impregnate attachment pads (1) with ESSO TERESSO 120 oil or SHELL TELLUS 75 oil.

Shock absorbers (non-removable) :
- Maximum out-of-true of shock-absorber rod : .... 0.5 mm for length = 350 mm (0.02 in for length = 14 in)

Springs :
Characteristics :
- Wire dia. : ..... 11.2 mm (0.44 in)
- Outside dia. : ..... 148 mm (5.8 in)
- Number of spirals : 7.5

Both sides must be equipped with springs of identical calibration (same colour mark)

Spring identification :
- Under load of 252 kg (555.5 lb) :
  - Height below 230 mm (9 in) (1 blue mark and 1 yellow mark)
  - Height above 230 mm (9 in) (2 yellow marks)

V. 43-7

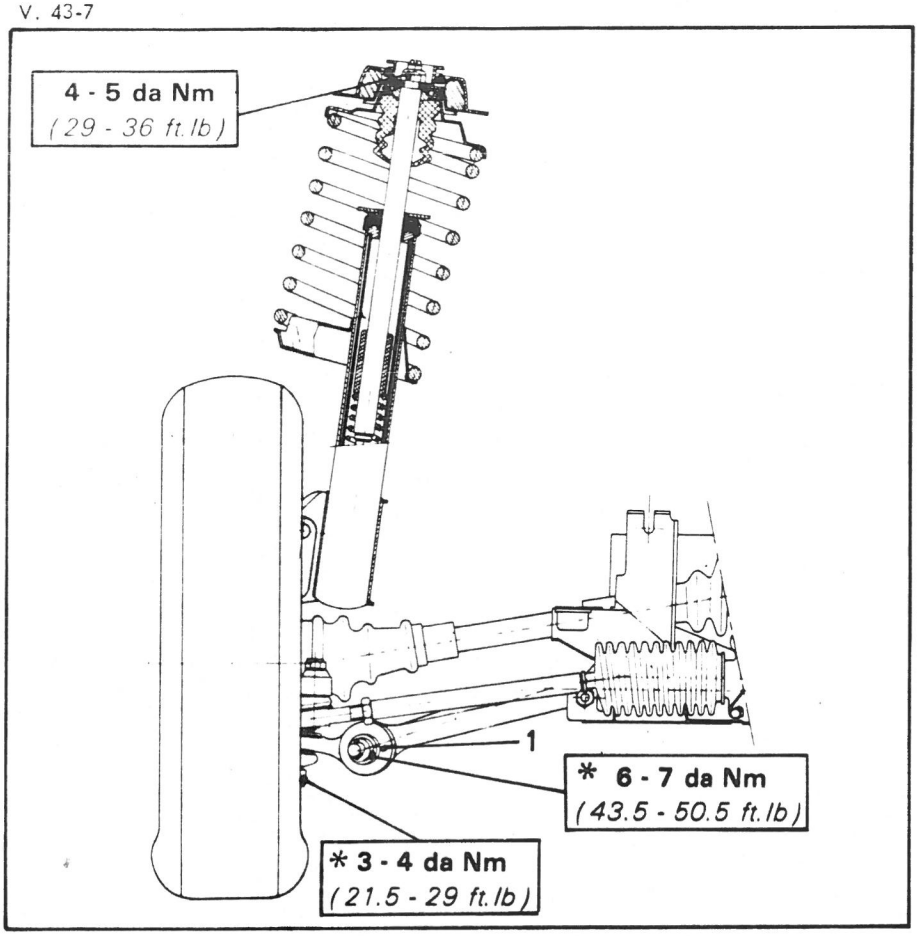
4 - 5 da Nm
(29 - 36 ft.lb)
1
* 6 - 7 da Nm
(43.5 - 50.5 ft.lb)
* 3 - 4 da Nm
(21.5 - 29 ft.lb)

V. 41-3

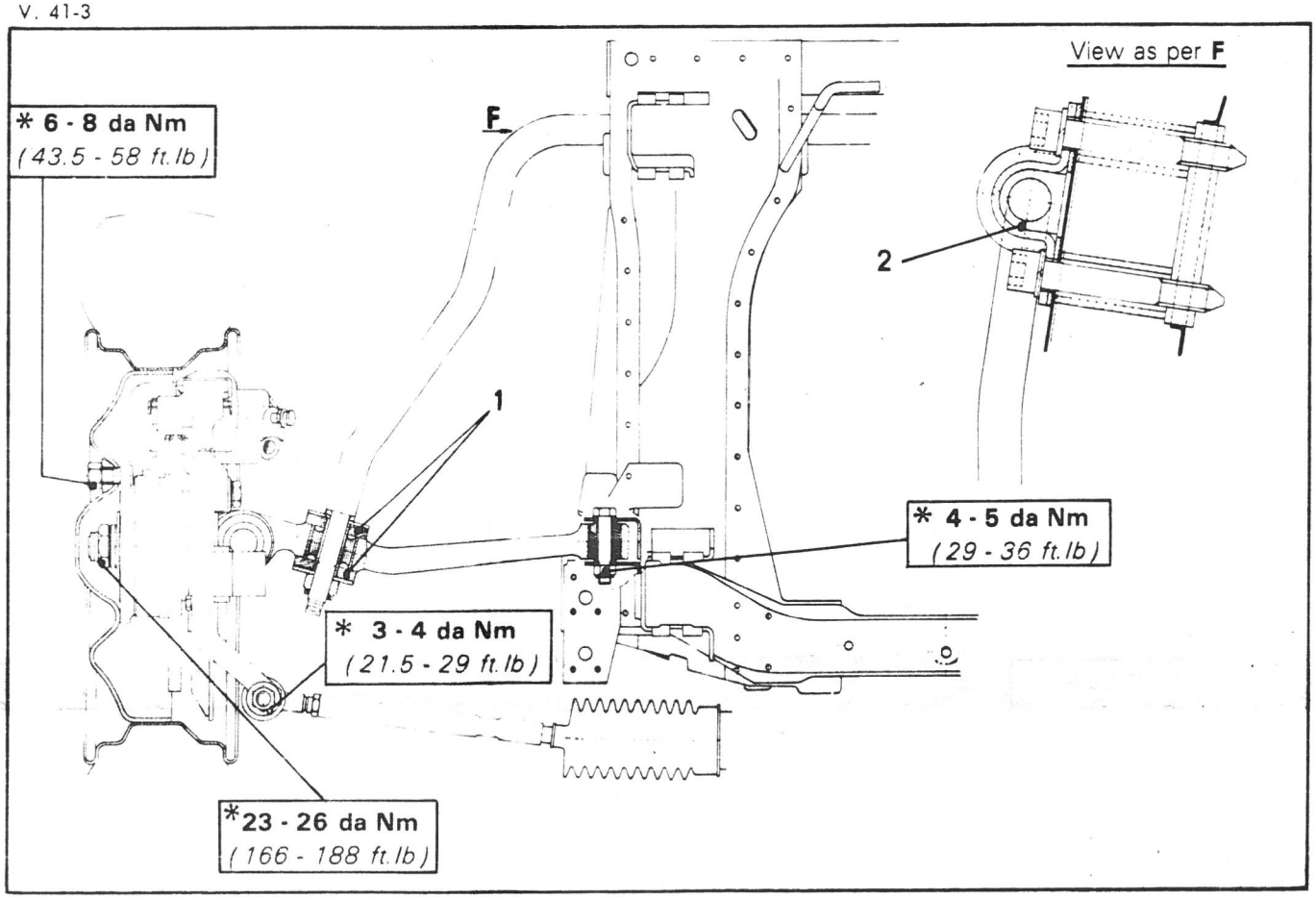
View as per F
* 6 - 8 da Nm
(43.5 - 58 ft.lb)
F
2
1
* 4 - 5 da Nm
(29 - 36 ft.lb)
* 3 - 4 da Nm
(21.5 - 29 ft.lb)
*23 - 26 da Nm
(166 - 188 ft.lb)

V. 43-6

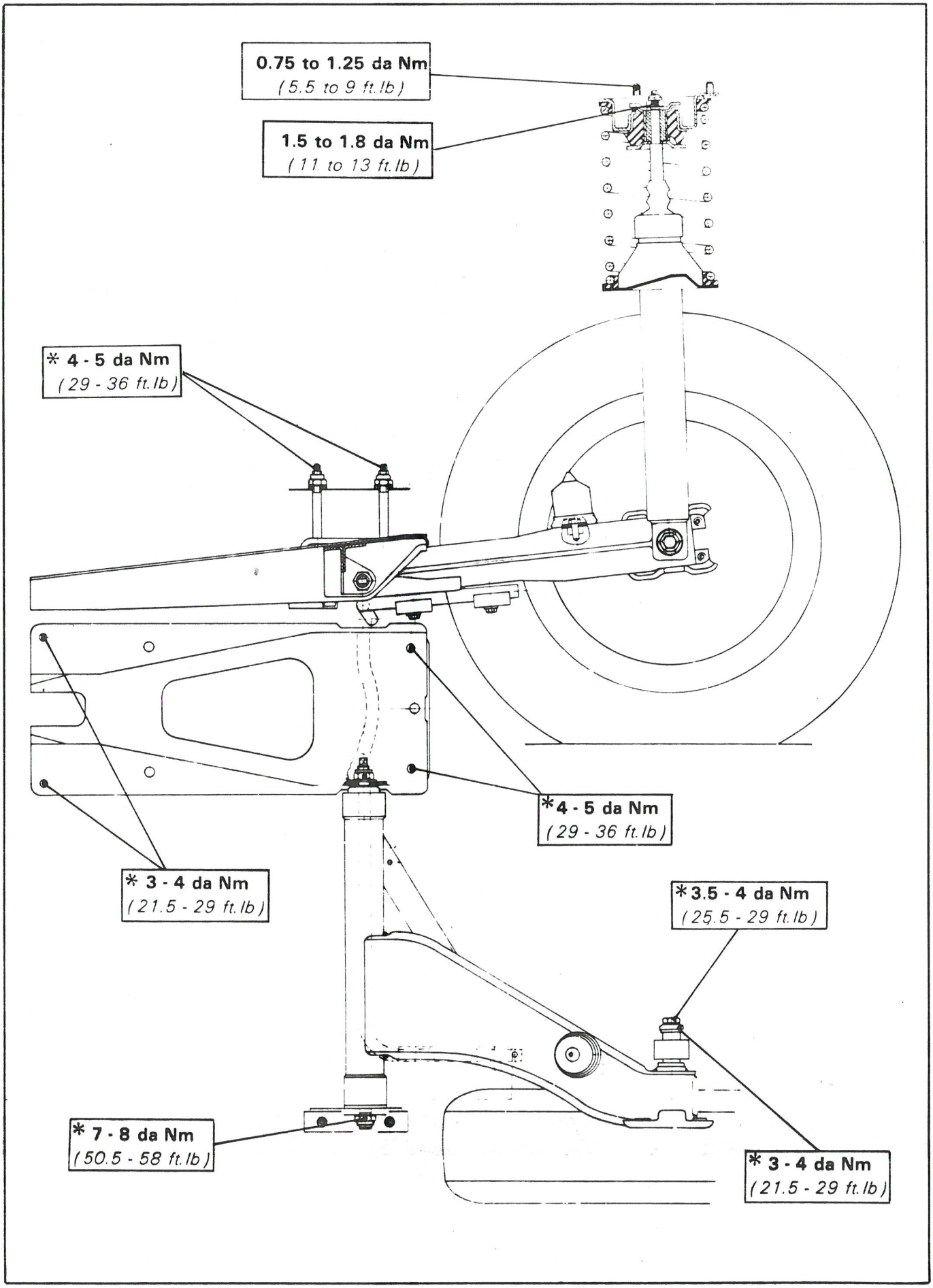
0.75 to 1.25 da Nm
(5.5 to 9 ft.lb)
1.5 to 1.8 da Nm
(11 to 13 ft.lb)
* 4 - 5 da Nm
(29 - 36 ft.lb)
*4 - 5 da Nm
(29 - 36 ft.lb)
* 3 - 4 da Nm
(21.5 - 29 ft.lb)
*3.5 - 4 da Nm
(25.5 - 29 ft.lb)
* 7 - 8 da Nm
(50.5 - 58 ft.lb)
* 3 - 4 da Nm
(21.5 - 29 ft.lb)

REAR SUSPENSION

I - CHARACTERISTICS

Integrated telescopic suspension, with independent wheels, comprising on each side a shock absorber and a concentric coil spring. An anti-roll bar couples the two components.

II - SPECIAL FEATURES

Shock absorbers (non-removable) :

- Maximum out-of-true of shock-absorber rod : ..... 0.5 mm for length = 350 mm (0.02 mm for length = 14 in)

Springs :

Characteristics :

- Wire dia. : ..... 11.1 mm (0.43 in)
- Outside dia : ..... 129.1 mm (5.1 in)
- Number of spirals : 7.5

Both sides must be equipped with springs of identical calibration (same colour mark)

Spring identification :

Under load of 243 kg (535.7 lb) :

- Height below 220 mm (8.6 in) (1 grey mark and 1 green mark)
- Height above 220 mm (8.6 in) (1 grey mark and 1 yellow mark)

OPERATION
VD2. 440-00

CHARACTERISTICS AND SPECIAL FEATURES OF THE STEERING

813-1 (I)

CHARACTERISTICS

Rack and pinion steering.
Wheel alignment *(toe-in)* - Adjustment by the two link rods : ..... 1± 1 mm
Lock angle *(non-adjustable)* { inner wheel : ..... 42° 18'
outer wheel : ..... 32° 51'

Turning circle :
- between walls : ..... 9.89 m (32 ft. lb 5 1/4 in)
- between kerbs : ..... 8.46 m (27 ft. 9 in)
Steering ratio : ..... 18.38 : 1

SPECIAL FEATURES

Number of teeth on pinion : 7
Number of teeth on rack : 28
Clearance at rack plunger : ..... 0.01 to 0.06 mm
Thickness of adjusting shims : ..0.10 - 0.12 - 0.15 - 0.18 - 0.20 - 0.30 - 0.40 - 0.50 - 0.60 - 0.70 - 0.80 mm
End float of rack pinion : ..... 0.01 to 0.06 mm
Thickness of adjusting shims : ..... 0.10 - 0.12 - 0.15 - 0.18 - 0.20 - 0.59 mm
Link rods pre-setting : ..... 316.44 mm (12.45 in) } See Op.
"Straight-ahead" position « d » : ..... 74 mm (2.91 in) } VD2.442-1
Position of the steering wheel spoke in the "straight-ahead" position : ..... pointing downwards

V.44-1

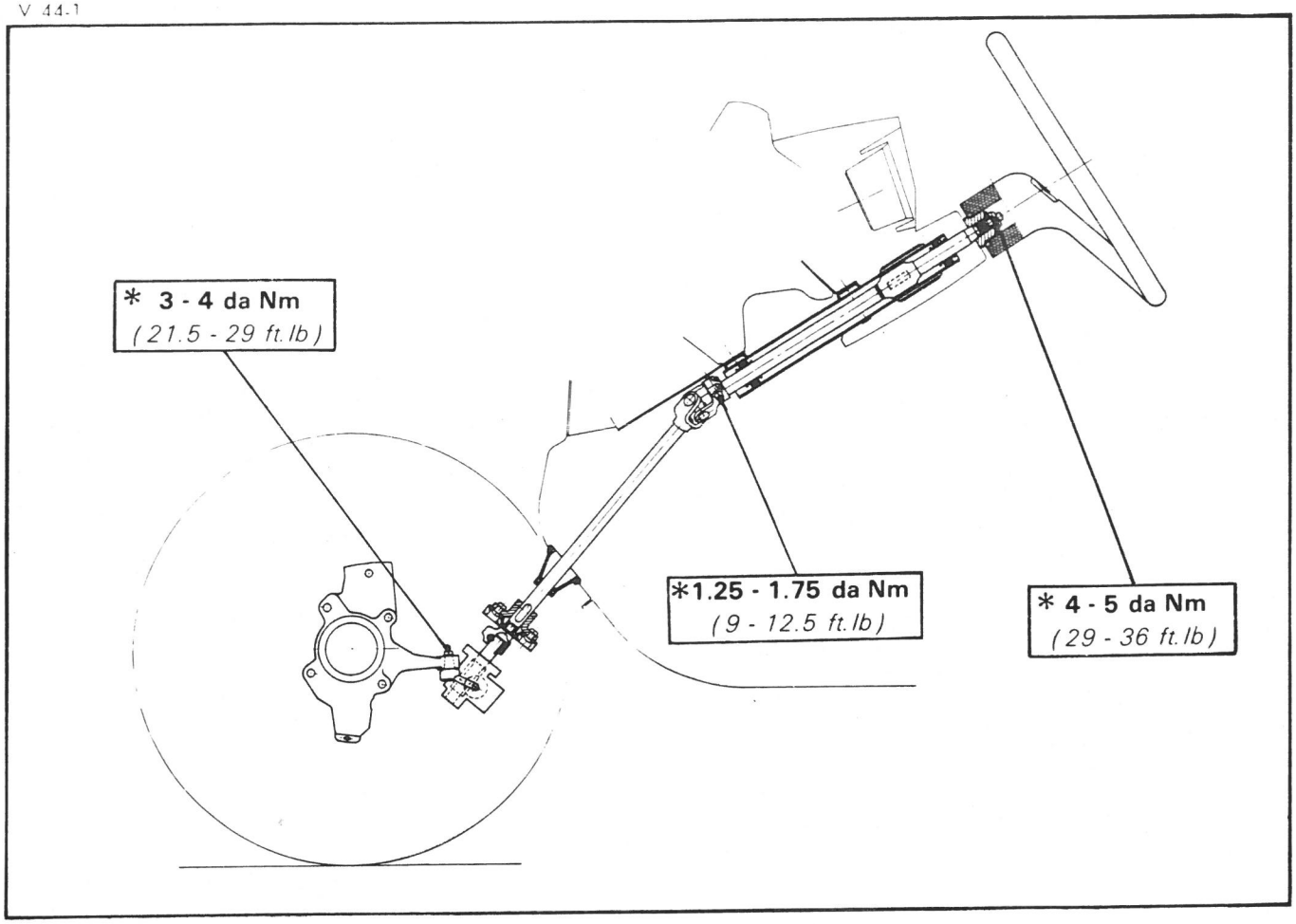
* 3 - 4 da Nm
(21.5 - 29 ft.lb)
*1.25 - 1.75 da Nm
(9 - 12.5 ft.lb)
* 4 - 5 da Nm
(29 - 36 ft.lb)

V.44-3

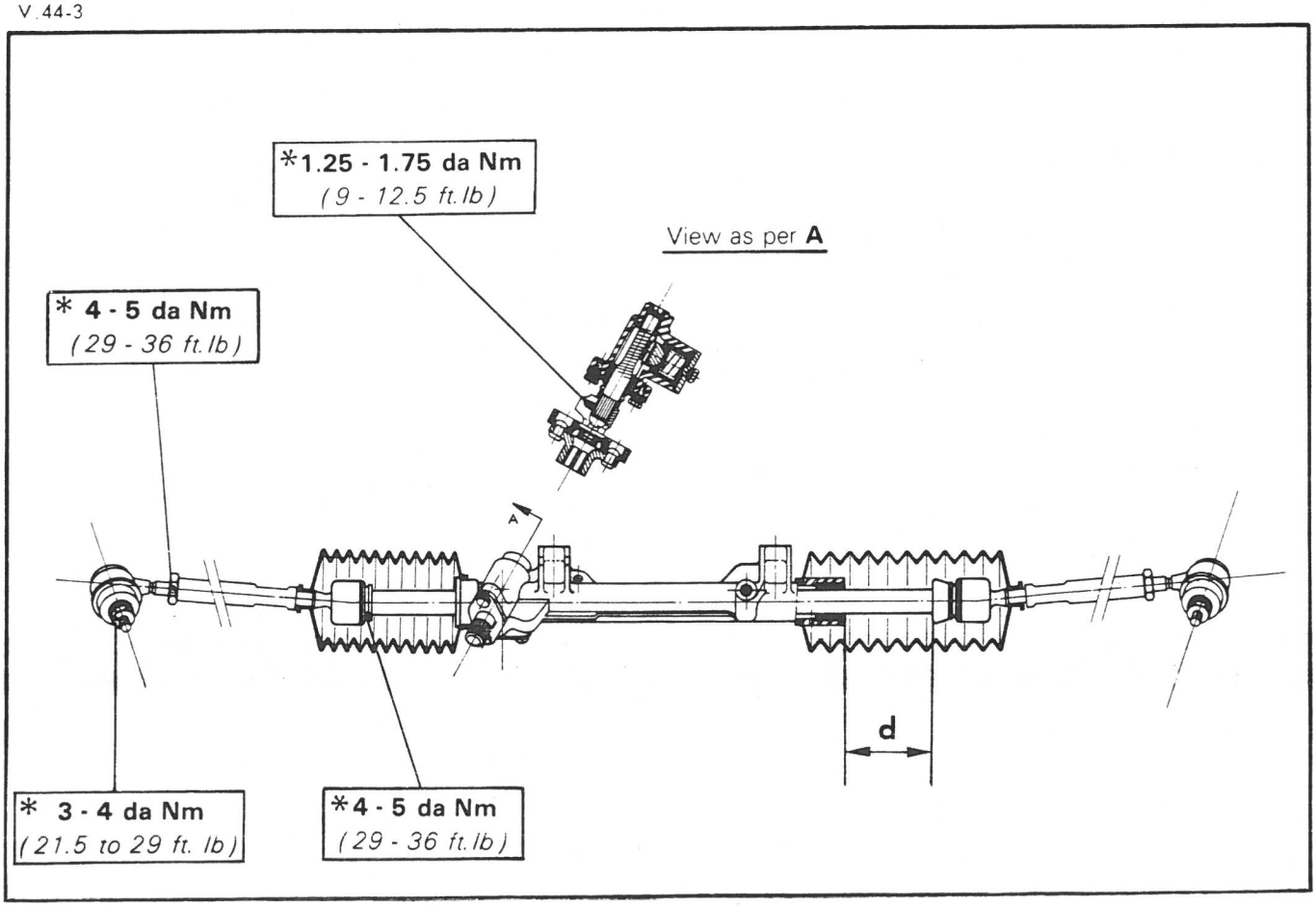
*1.25 - 1.75 da Nm
(9 - 12.5 ft.lb)
View as per A
* 4 - 5 da Nm
(29 - 36 ft.lb)
A
d
* 3 - 4 da Nm
(21.5 to 29 ft. lb)
*4 - 5 da Nm
(29 - 36 ft.lb)

OPERATION
VD2. 450-00

CHARACTERISTICS AND SPECIAL FEATURES OF THE BRAKING SYSTEM

CHARACTERISTICS

MAIN BRAKING SYSTEM

- **Disc brakes at the front :**
- CITROËN brakes : with fixed brake units and automatic wear take-up device, (2 opposed pistons per unit).
- DBA brakes : with brake units of the "floating" type and automatic wear take-up device (1 piston per unit).
- **Drum brakes at the rear ;** brake shoes of the "floating" type, with automatic wear take-up device.
- Hydraulic control through a dual-circuit master cylinder, pressure compensator on rear brakes.
- Front brake pad wear warning lamp.

HANDBRAKE

- Lever-operated, by action on the rear wheels via cables.
  The vehicle should be brought to a stop by shifting the lever by 5 notches max.

TOTAL FRICTION AREA

- Main braking system :

- Front brakes	CITROËN :	166cm2 (25.73 sq in)
	D B A :	144 cm2 (22.32sq in)
- Rear brakes	GIRLING :	158 cm2 (24.49 sq in)
	D B A :	159 cm2 (24.64 sq in)
- Handbrake :	GIRLING :	158 cm2 (24.49 sq in)
	D B A :	159 cm2 (24.64 sq in)

Brake circuit *(key) :*

1 - Front brakes
2 - Rear brakes
3 - Master cylinder
4 - Brake fluid level warning lamp
5 - Handbrake
6 - Pressure compensator : Location (➔) of identification mark **(J)**
7 - Check-button for fluid level warning lamp.

CHARACTERISTICS

MAIN BRAKING SYSTEM.

- **Disc brakes at the front :**
- CITROËN brakes with fixed calipers and automatic wear take-up (two opposed pistons per caliper).
- D.B.A. brakes with « floating » calipers and automatic wear take-up (one piston per caliper) *(limited production).*
- **Drum brakes at the rear :** with floating brake shoes and automatic wear take-up.

- **Hydraulic operation by dual circuit master cylinder :**

SUPER and SUPER « E » VISA II « L »	SUPER « X » VISA II SUPER « E » - VISA II SUPER « X »
- Pressure compensator on rear brakes	- Vacuum servo assistance - Pressure limiter to rear brakes

- Front brake pad wear warning lamp.

HANDBRAKE.

- Lever operated via cables, to rear wheels.
- Fully applied braking action must be achieved after a lever movement of five notches of the ratchet (maximum).

TOTAL FRICTION AREA

	SUPER SUPER « E » VISA II «L»		SUPER « X » VISA II SUPER « E » VISA II SUPER « X »
	DBA	CITROËN	
- Total minimum surface area of main brake :	286 cm^2 (44.33 in^2)	312 cm^2 (48 in^2)	312 cm^2 (48 in^2)

- Handbrake
  GIRLING : ..... 158 cm^2 (24.49 in^2)
  DBA : ..... 159 cm^2 (24.64 in^2)

Braking circuit *(key) :*

SUPER and SUPER « E » VISA II « L »	SUPER « X » VISA II SUPER « E » - VISA II SUPER « X »
1 - Front brakes **2** - Rear brakes **3** - Master cylinder **4** - Fluid level warning lamp **5** - Handbrake **6** - Pressure compensator (⟶) : location of identification mark (**J**) **7** - Check button for fluid level warning lamp	**8** - Front brakes **9** - Rear brakes **10** - Master cylinder **11** - Vacuum servo assistance **12** - Fluid level warning lamp **13** - Handbrake **14** - Pressure limiter **15** - Check button for fluid level warning lamp

V. 45-1

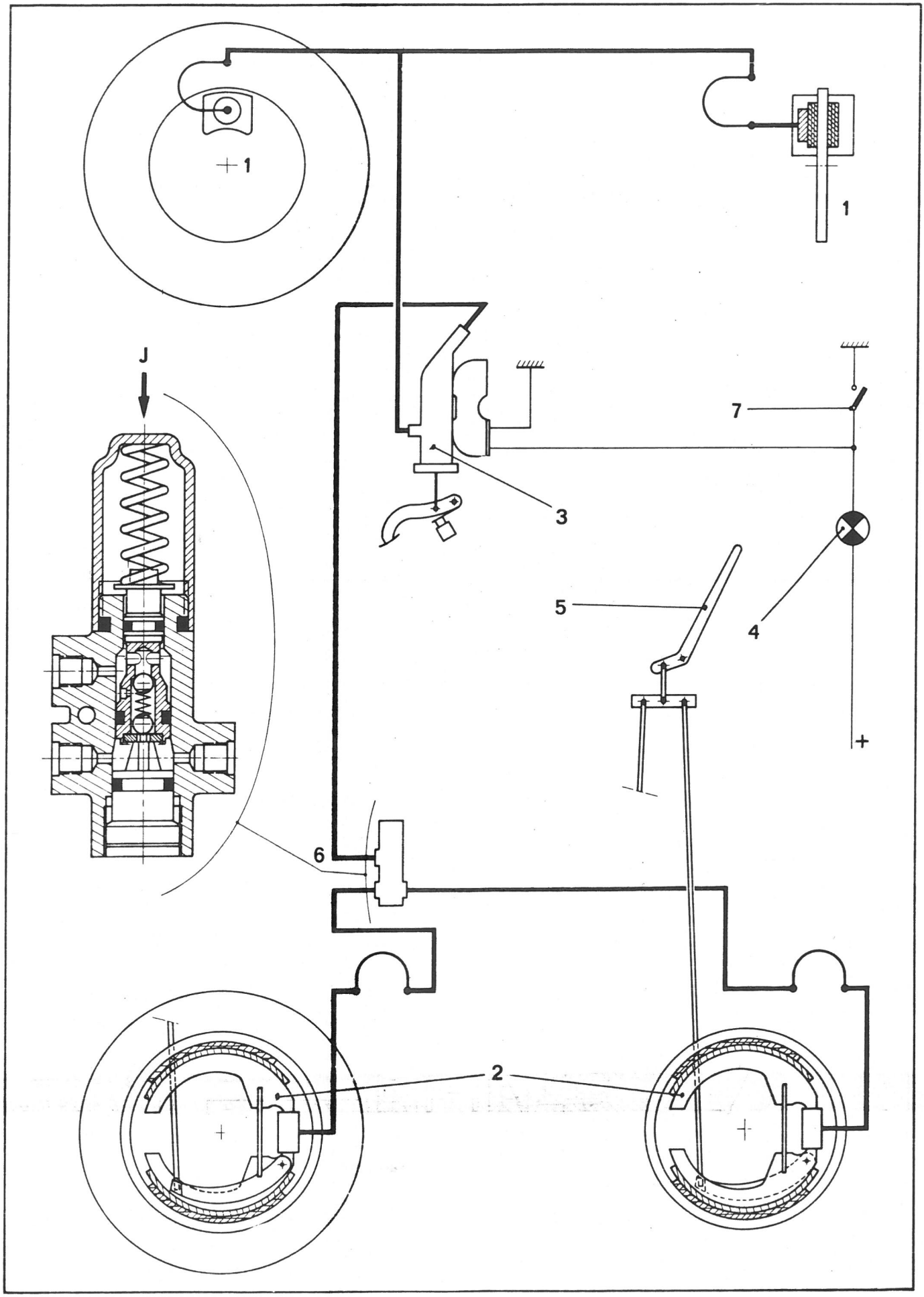

813-1 (I)

V. 45-6 a

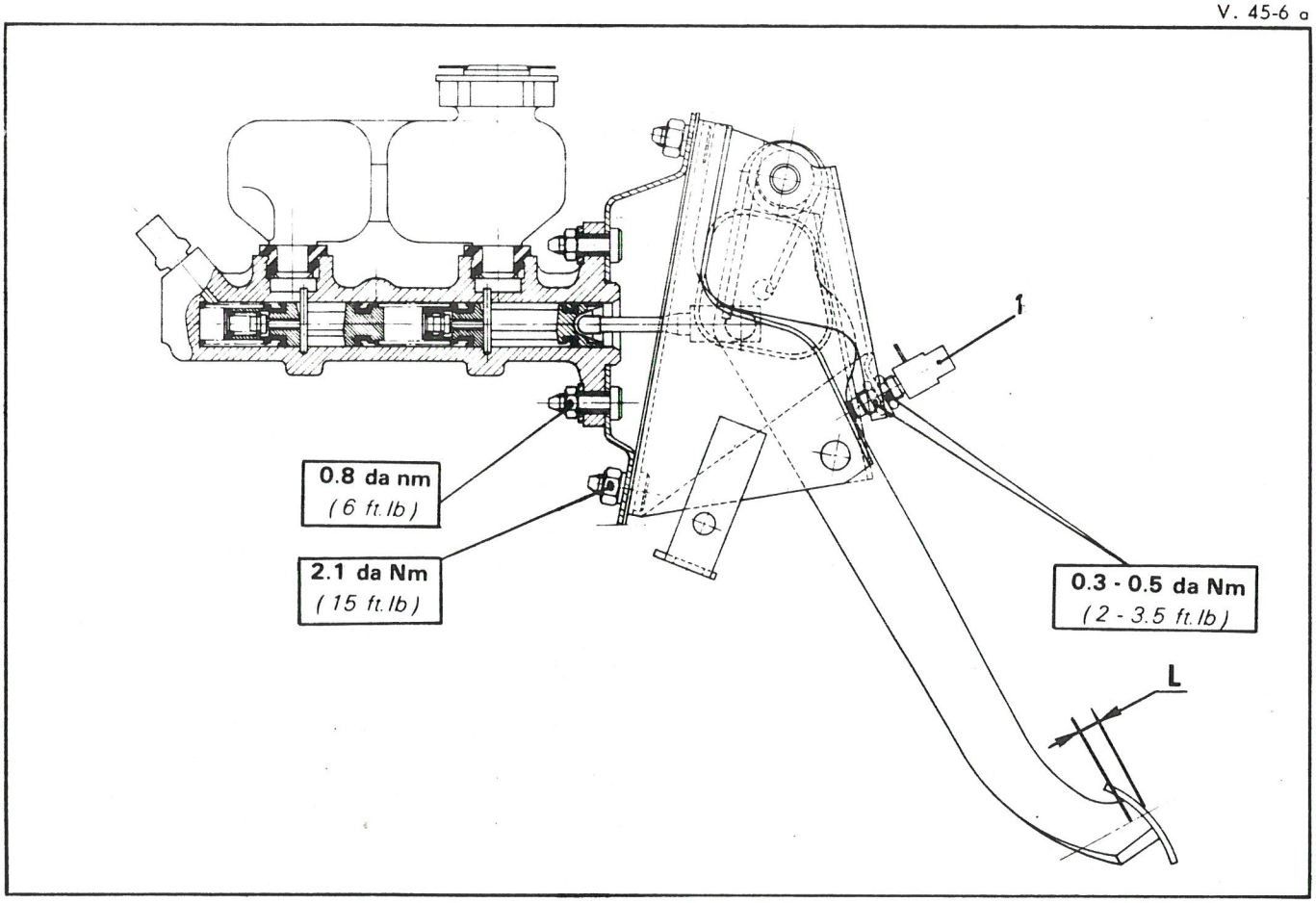
0.8 da nm
(6 ft.lb)
2.1 da Nm
(15 ft.lb)
1
0.3 - 0.5 da Nm
(2 - 3.5 ft.lb)
L

V. 41-1

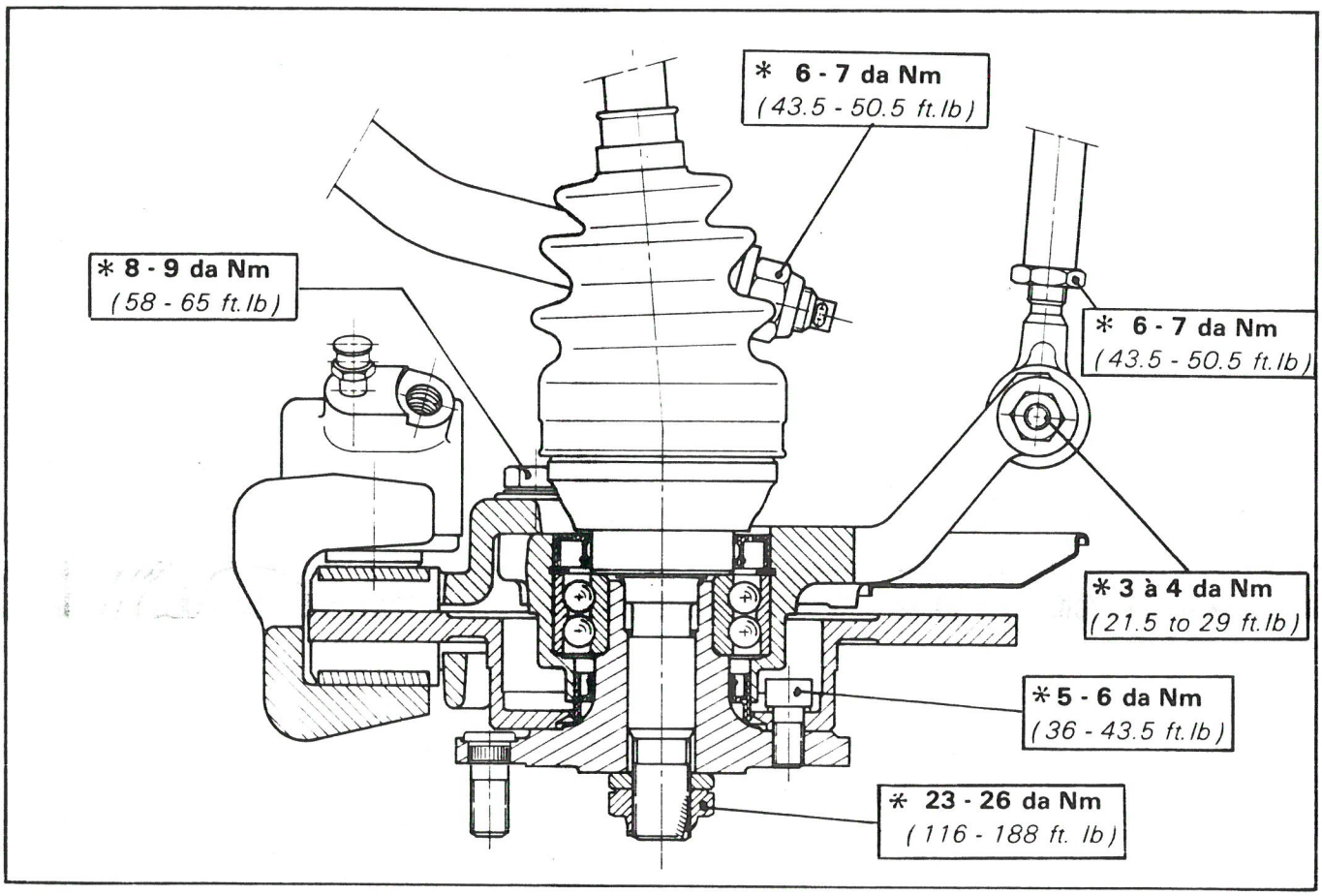
* 6 - 7 da Nm
(43.5 - 50.5 ft.lb)
* 8 - 9 da Nm
(58 - 65 ft.lb)
* 6 - 7 da Nm
(43.5 - 50.5 ft.lb)
* 3 à 4 da Nm
(21.5 to 29 ft.lb)
* 5 - 6 da Nm
(36 - 43.5 ft.lb)
* 23 - 26 da Nm
(116 - 188 ft. lb)

SPECIAL FEATURES

- Play between push rod and master-cylinder : ..... 0.2 to 0.5 mm (0.007 to 0.010 in)
- As an indication : for a free-play between pushrod and master cylinder of 0.5 mm (0.02 in) : ..... L = 2.5 mm (0.10 in)
- Adjustment of the clearance is obtained by screwing or unscrewing the stoplamp switch (1).

Master cylinder :
♦ SUPER : Fig. (1) **SUPER « E » and VISA II « L » : Fig. (2)**

- Dual circuit without residual pressure valve. The front section feeds the rear brakes, and the rear section feeds the front brakes.

CITROËN front brake fitting
- diameter of master cylinder : ..... 17.5 mm (0.68 in)
- stroke of master cylinder : ..... 16 + 10 mm (0.62 + 0.39 in)

DBA front brake fitting
- diameter of master cylinder : ..... 19 mm (0.75 in)
- stroke of master cylinder : ..... 15 + 11 mm (0.59 + 0.43 in)

- Reservoir capacity between minimum and maximum : ..... 0.14 litres (0.25 Imp. pts)
- Brake fluid conforms with specification NFR 126 40 S or V, or SAE J 1703 (e.g. TOTAL SY).

♦ SUPER « X » - VISA II « E » - VISA II SUPER « X » : Fig. (3)

Power assistance by means of a vacuum servo unit.
- Diameter of master cylinder : ..... 19 mm (0.75 in)
- Stroke of the master cylinder : ..... 15 + 12.4 mm (0.59 + 0.49 in)
- Stand proud « b » of the pushrod in relation to the attachment face of the cylinder : ..... $9\ ^{0}_{-0.2}$ mm ($0.35\ ^{0}_{-0.008}$ in)

System malfunctions - Causes :

- Incorrect seal of pipework between cylinder head and valve (2).
- Incorrect fit of valve (2) and seal (3).
- Clogging of filter « a » for atmospheric pressure inlet.

OPERATING PRINCIPLE OF THE POWER SYSTEM

1. Rest position : fig. (1)

Port (7) supplied with atmospheric pressure is closed while port (8) supplied with vacuum is opened, thus enabling some vacuum to pass from chamber **G** to chamber **H** of the operating cylinder. Then, the operating piston is balanced in the cylinder and held in the rest position by spring (3).

2. Braking position : fig. (2)

Depressing the brake pedal entails the shifting of the control rod towards the front and the shifting of valve (10) plunger ram towards the right in the operating piston.
At first, port (8) supplied with vacuum closes, isolating chambers **G** and **H** of the operating cylinder. Then, port (7) supplied with atmospheric pressure opens, enabling the air to enter L.H. chamber **G** of the operating cylinder. The air pressure built in the L.H. chamber of the cylinder, provokes the shifting of the operating piston from the L.H. to the R.H. side and controls the master-cylinder through the reaction disc and the push-rod. When the master-cylinder acts upon the hydraulic pressure, a reaction force is exerted on valve plunger ram (10) through push-rod (4) and reaction disc (11), thus closing the atmospheric pressure port and opening the vacuum port.
As long as this force is opposed to the one exerted by the driver on the brake pedal, it enables him to adapt the braking power to his needs. The reaction force is proportional to the hydraulic pressure existing in the braking system.

3. Holding position : fig. (3)

If the driver keeps on depressing the pedal, the system is stabilized at a balanced position, both port (7), supplied with atmospheric pressure and port (8), supplied with vacuum are closed and the reaction force which presses disc (11) balances the effort exerted on the pedal.
Any increase in the brake pedal effort will open the atmospheric port and increase the pressure on the operating piston as well as the reaction on the pedal.

4. Maximum braking position : fig. (4)

In this position, control valve plunger ram (10) crushes reaction disc (11), vacuum port (8) is closed and port (7) is opened. Since the maximum pressure is exerted on the operating piston, any further increase of the hydraulic pressure will be obtained by applying additional pressure on the brake pedal.

5. Return to rest position :

When releasing the brake pedal, the control rod is drawn back by its spring to its rest position and in turn drives the plunger ram which closes the atmospheric port and opens the vacuum one.
Then, the two chambers are connected to each other again, and the vacuum is re-established as previously on both sides of the operating piston which is drawn back by its spring to its rest position.

Key :

1 - Operating piston
2 - Membrane
3 - Return spring
4 - Push-rod
5 - Non return valve
6 - Air filter
7 - Atmospheric orifice
8 - Vacuum orifice
9 - Control rod
10 - Valve plunger ram
11 - Reaction disc
12 - Operating piston seal
13 - Push-rod seal.

Rear brakes *(D B A fitting) :*

- Drum diameter : ..... 180 mm (7.08 in)
- Max. diameter after grinding : ..... 181 mm (7.12 in)
- Diameter of operating cylinder : *Master cylinder, dia. 19 mm (0.75 in) :* 22 mm (0.86 in)
  Master cylinder, dia. 17.5 mm (0.68 in) : 20.6 mm (0.81 in)
- Identification of shoes :
  - Front shoe (primary or "compressed") with mounting axle for automatic wear take-up.
  - Rear shoe (secondary or "stretched") with no mounting axle.
- Lining dimensions : ..... 162 × 30 mm, thickness : 5 mm
  (6.37 × 1.18 in, thickness : 0.19 in)
- Grade of linings : ..... F 617

Rear brakes *(GIRLING fitting) :*

- Drum diameter : ..... 180 mm (7.08 in)
- Max. diameter after grinding : ..... 181 mm (7.12 in)
- Diameter of operating cylinder : *Master cylinder, dia. 19 mm (0.75 in) :* 22 mm (0.86 in)
  Master cylinder, dia. 17.5 mm (0.68 in) : 20.6 mm (0.86 in)
- Identification of shoes :
  - Rear shoe (secondary or "stretched") with a lever for handbrake operation.
  - Front shoe (primary or "compressed") with no lever for handbrake operation.
- Lining dimensions : ..... 140 × 30 mm, thickness : 5 mm
  (5.5 × 1.18 in,-thickness : 0.19 in)
- Grade of linings : ..... F 617

Key :

(D B A fitting) :
1- Wear take-up lever
2- Lever for handbrake operation
3- Handbrake control cable.

(GIRLING fitting) :
4- Wear take-up device
5- Lever for handbrake operation
6- Handbrake control cable.

V. 45-2

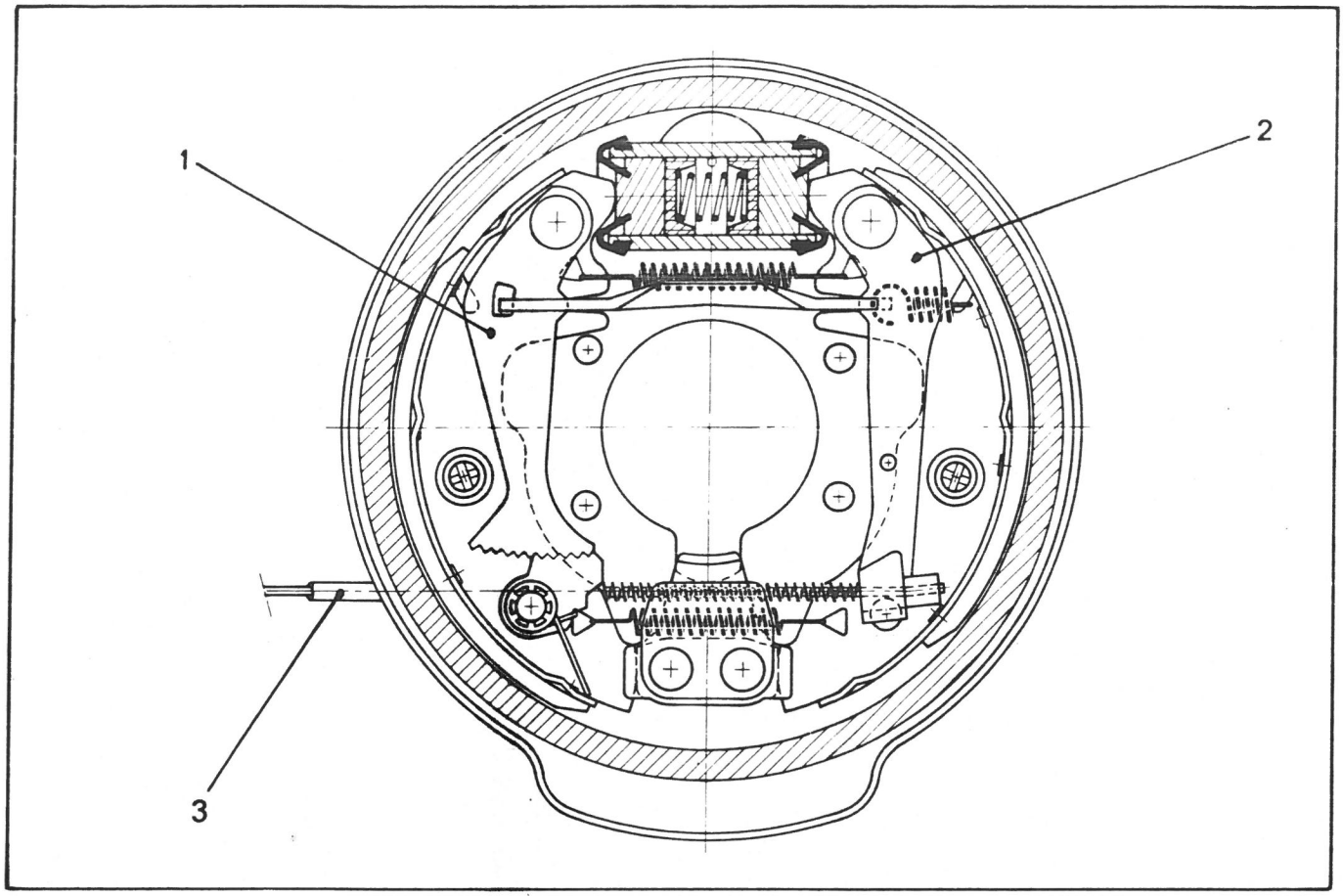

V. 45-3

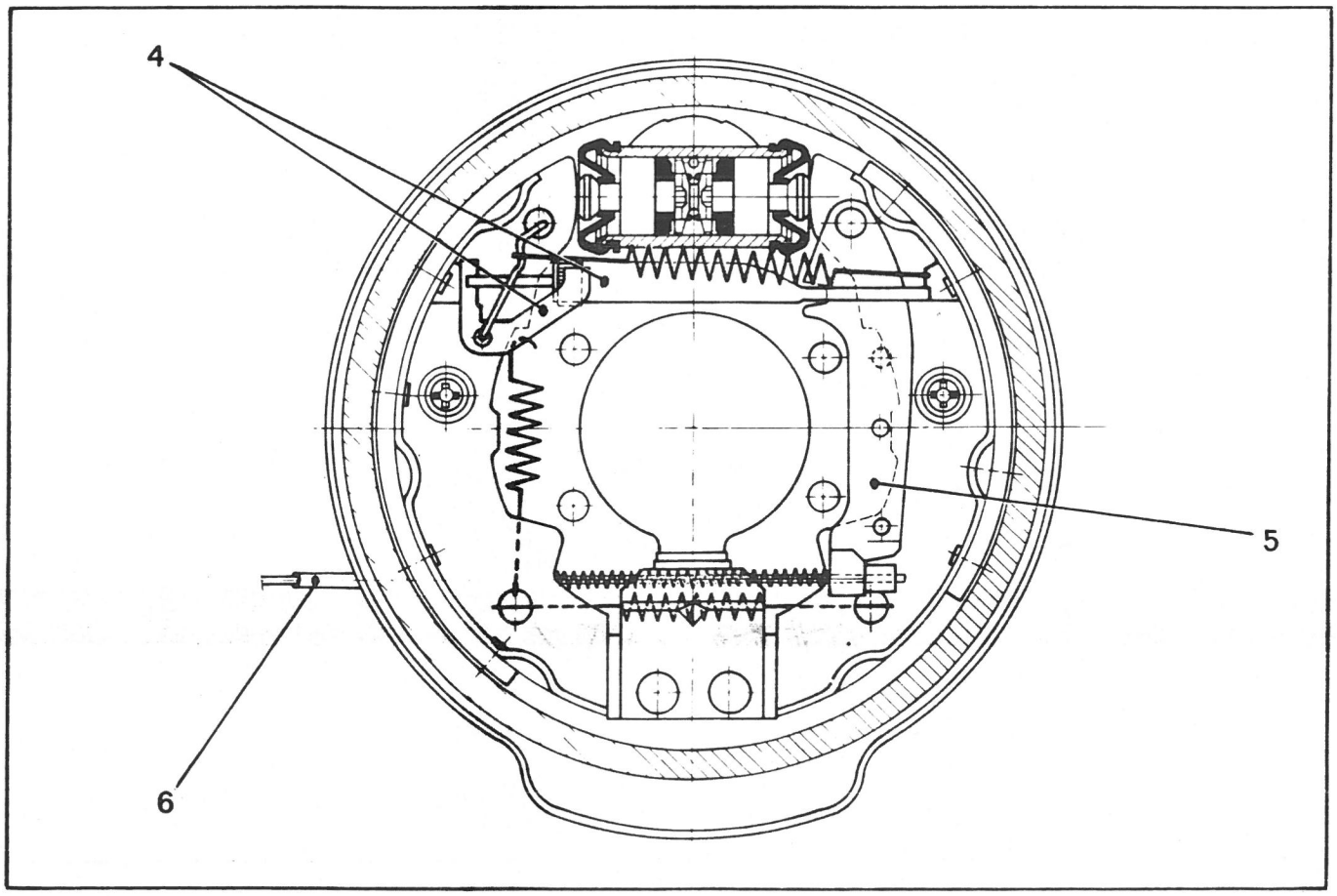

V. 45-4

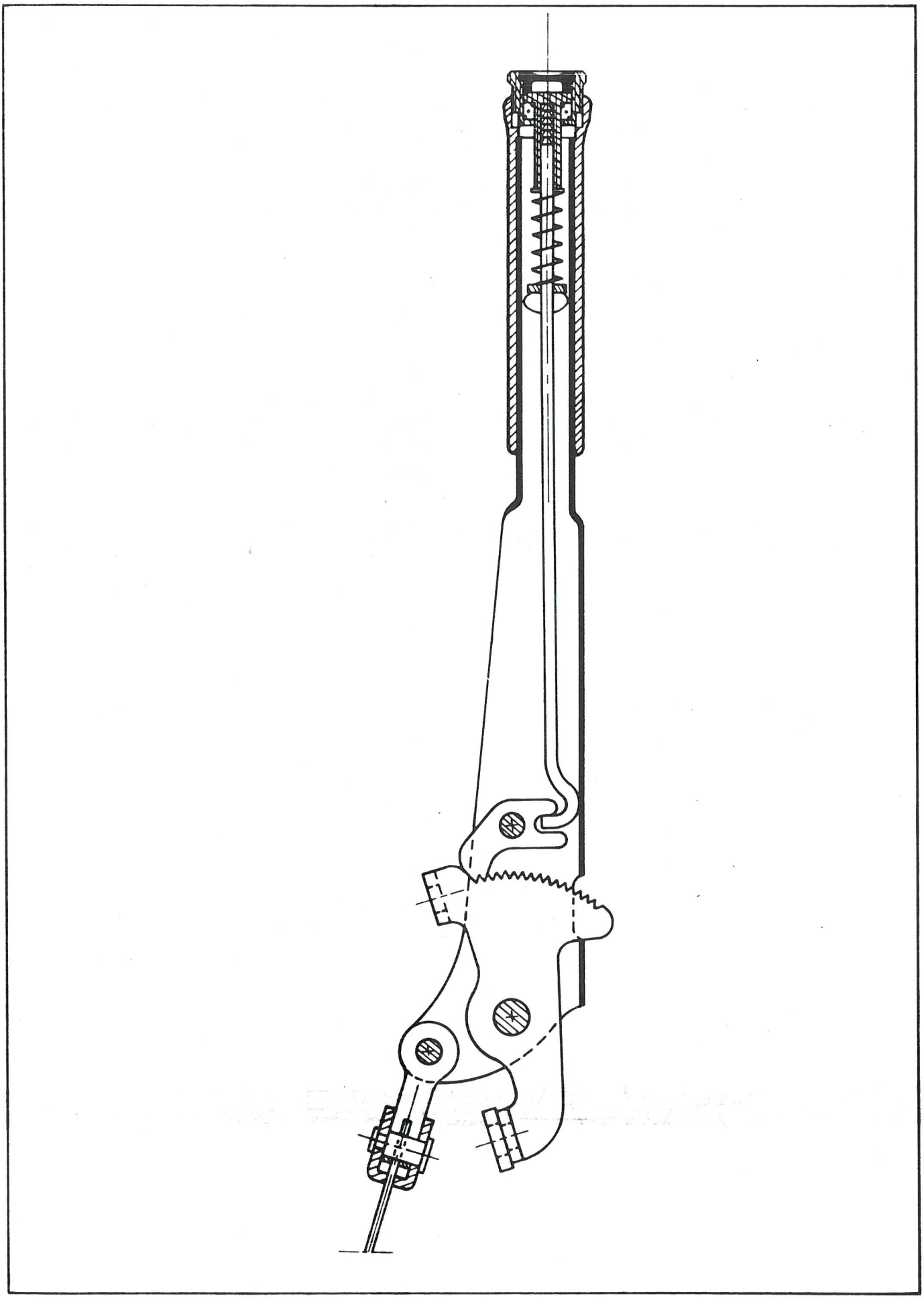

OPERATION
VD2. 454-0

ADJUSTING THE HANDBRAKE
ADJUSTING THE BRAKE LIMITER

ADJUSTING THE HANDBRAKE

- Apply the footbrake two or three times.
- Place the handbrake lever at the third ratchet notch.
- Loosen lock nuts and re-adjust (⟶) until the rear brakes just start to come on.
- Equalize the cable tension on both LH and RH sides.
- Ensure that with a lever movement of five notches on the ratchet, the rear wheels are completely locked.
- Tighten the cable adjuster lock-nuts.

♦ ADJUSTMENT OF THE BRAKE LIMITER
(Vehicles equipped with power assisted braking)

- Apply heavy pedal pressure to the braking system to close the limiter.
- Adjust the cable clamp (3) to obtain a clearance **J** of 1 to 1.5 mm (0.04 to 0.06 in) between the contact face of the cable clamp and the lever (2).

Do not interfere with cut-off point adjusting screw (1) since this is adjusted at manufacture.

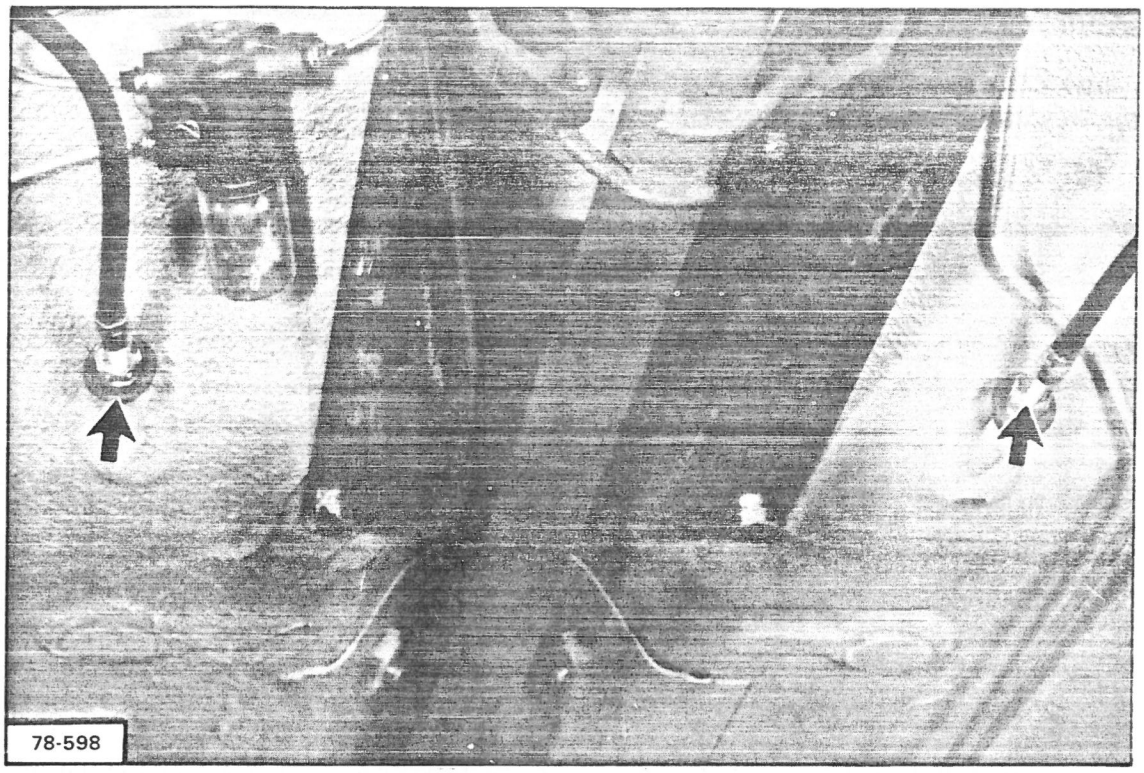
78-598

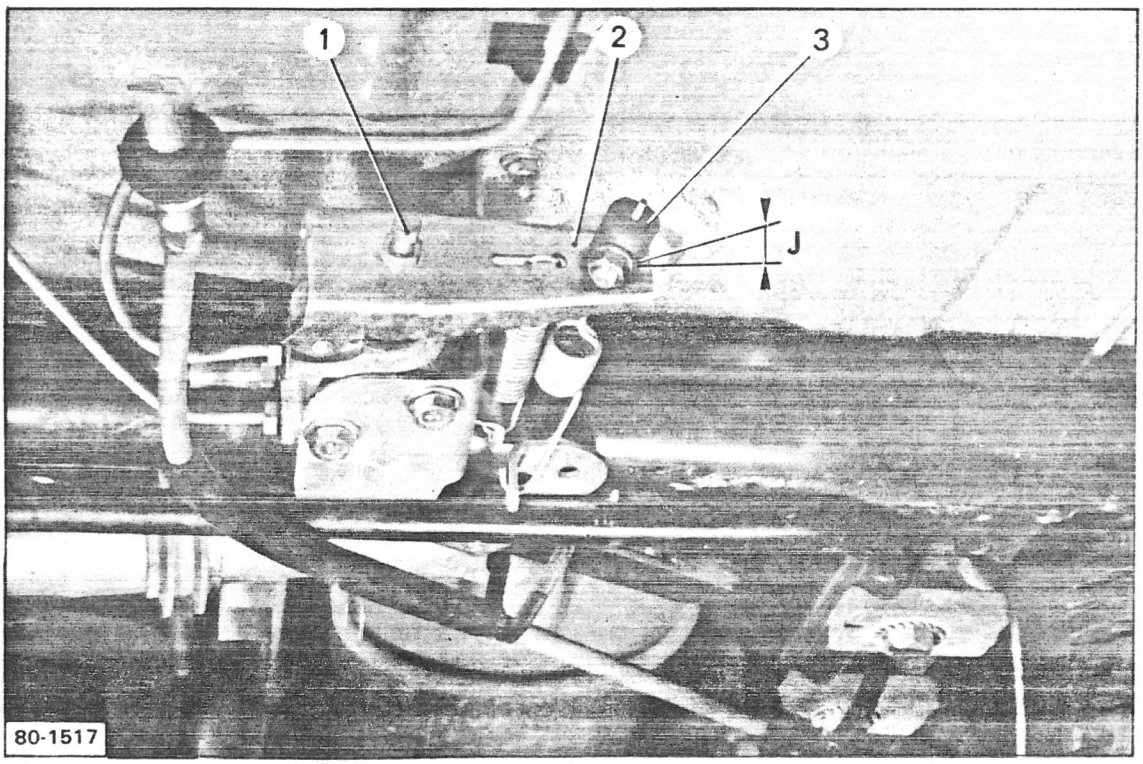
1
2
3
J
80-1517

LIST OF OPERATIONS IN SECTION II

Operation number	DESCRIPTION
	REMOVAL AND FITTING
	VD - ALL TYPES
VD. 434-1 a	Removing and fitting a front suspension unit
VD. 434-1 b	Removing and fitting a rear suspension unit
VD. 441-1	Removing and fitting the anti-theft device
VD. 451-1	Working on the front brakes
VD. 451-4	Working on the rear brakes
	VD1
VD1. 100-1	Removing and fitting an engine-gearbox unit
VD1. 100-4	Removing and fitting the engine only
VD1. 225-1	Replacing an oil cooler
VD1. 241-1	Replacing a fan (see Op. VD1. 225-1)
VD1. 343-4	Working on the gearbox - Removing and fitting a gearbox drive outlet shaft or a seal - Removing and fitting the gearbox rubber support blocks
VD1. 416-1	Removing and fitting a front hub
VD1. 442-1	Removing and fitting a rear wheel arm
VD1. 442-1	Removing and fitting a steering system
	VD2
VD2. 100-1	Removing and fitting an engine-gearbox unit
VD2. 372-1	Removing and fitting a complete drive shaft
VD2. 416-1	Removing and fitting a front hub
VD2. 422-1	Removing and fitting a rear wheel arm
VD2. 442-1	Removing and fitting a steering system

REMOVAL AND FITTING

Operations concerning both VD1 and VD2

VD 434-1 a : Removing and fitting a front suspension unit
VD 434-1 b : Removing and fitting a rear suspension unit
VD 441-1 : Removing and fitting the anti-theft device
VD 451-1 : Working on the front brakes
VD 451-4 : Working on the rear brakes

OPERATION
VD. 434-1 a

REMOVING AND FITTING
A FRONT SUSPENSION UNIT

REMOVING AND FITTING A FRONT SUSPENSION UNIT

REMOVAL

1. *On side where the operation is to be carried out :*
Loosen the wheel bolts.
Place the vehicle on stands located at jacking points.
Remove the wheel.

2. Remove nuts (3) and securing screws (2).

3. Withdraw shock absorber (1) from its upper mounting

4. Remove upper mounting nuts (5).

Do not remove nut (4).

5. Withdraw the suspension unit.

FITTING

6. Position the suspension unit in its upper and lower mountings.

7. Fit *new* Nylstop nuts (5).
Tighten to **0.75 to 1.25 m.daN (5.5 to 9 ft lb).**

8. Fit screws (2) **(with heads facing rear of vehicle)** and *new* Nylstop nuts (3).

Tighten to **6 to 8 m.daN (44 to 59 ft lb).**

9. Fit the wheel.
Lower the vehicle to the ground.
Tighten the wheel bolts.

NOTE : For reconditioning a suspension unit, see Op. VD1. 434-3 a.

78-170

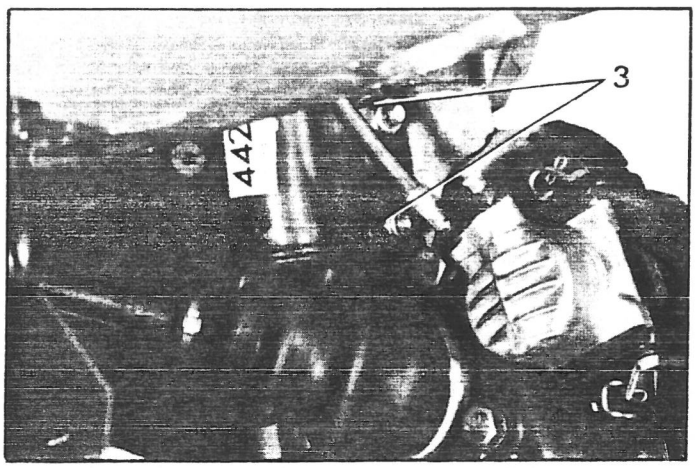

78-166

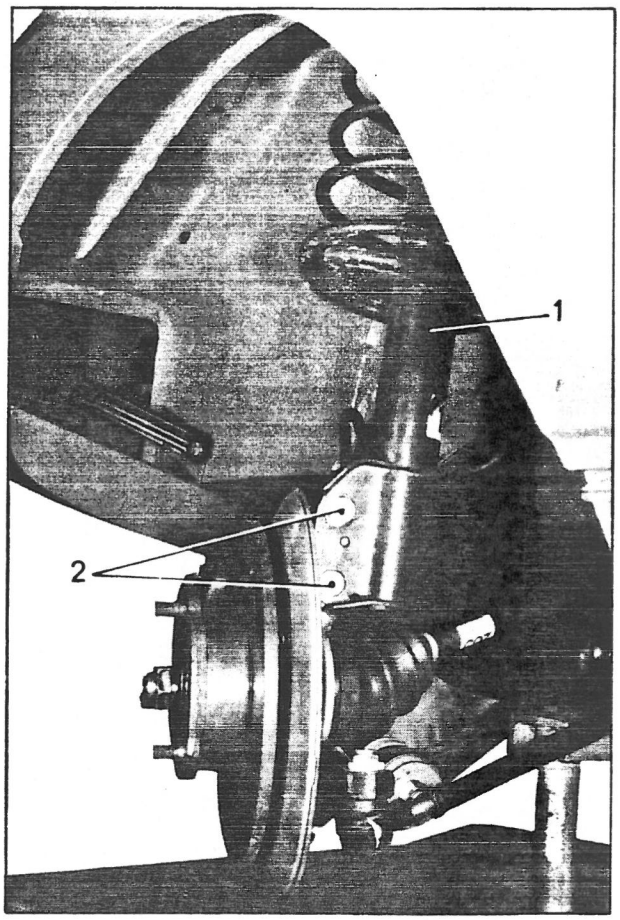

78-169

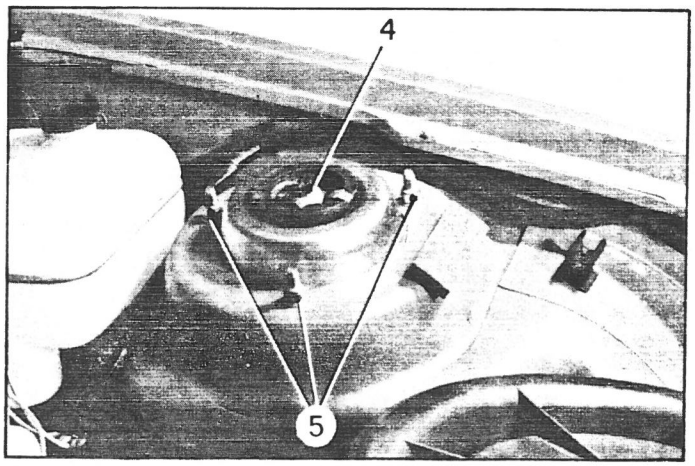

OPERATION
VD. 434-1 b

REMOVING AND FITTING
A REAR SUSPENSION UNIT

813-1 (II)

SPECIAL TOOLS

TOOLS SOLD

2-305-T : Gauge for height under body

4-028-T : Equipment for compressing suspension

8.1509-T : Rear lifting beam

TIGHTENING TORQUES

Recommended tightening torques :

Tightening points	Torques in m.daN (ft lb)
Nut for shock absorber upper mounting (serrated washer)	0.75 to 1.25 (5.5 to 4)
Nut for shock absorber eye	3 to 4 (22 to 29.5)
Locking screw for shock absorber eye	3.5 to 4 (26 to 29.5)

76-655

2305-T

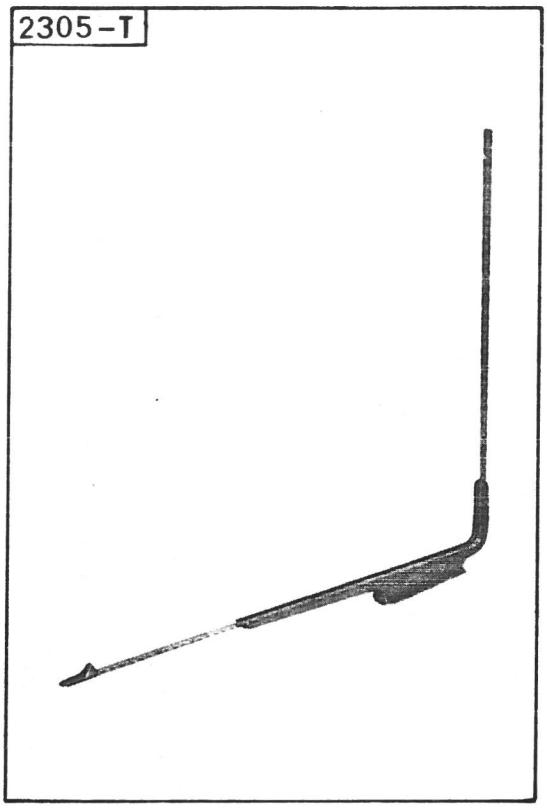

72-208

4028-T

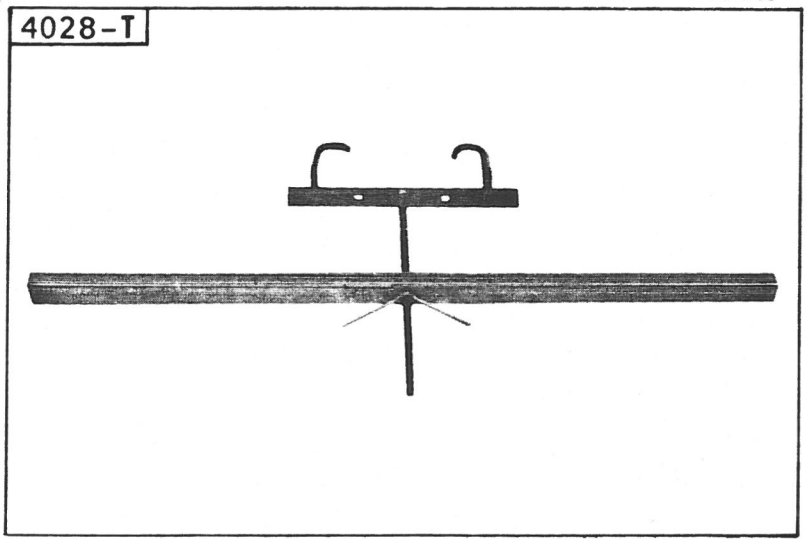

76-656

8.1509-T

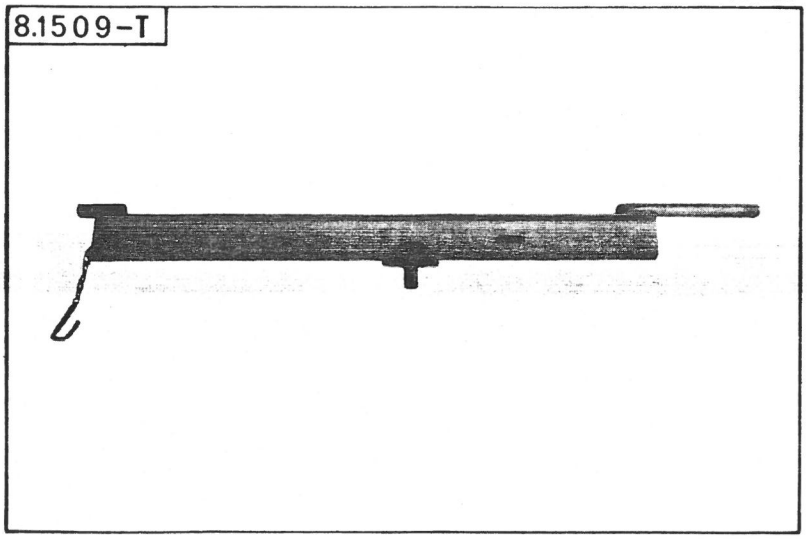

78-475

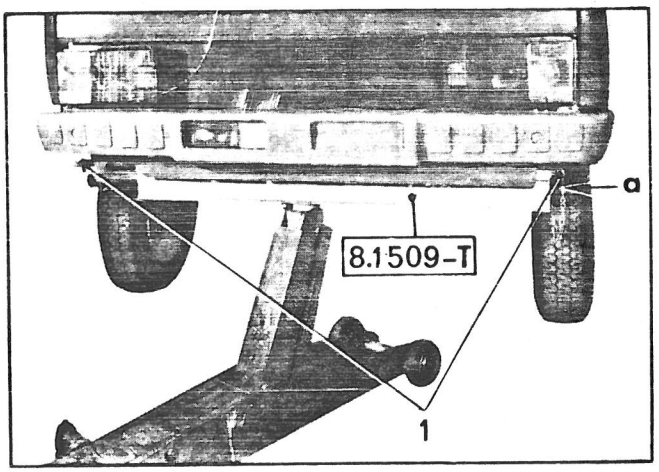

76-576

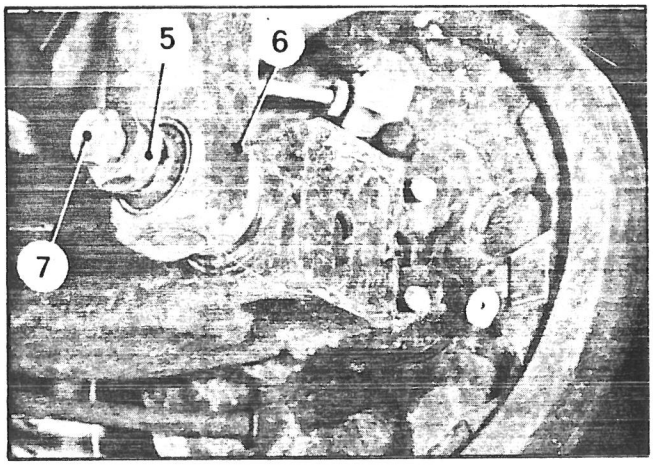

78-476

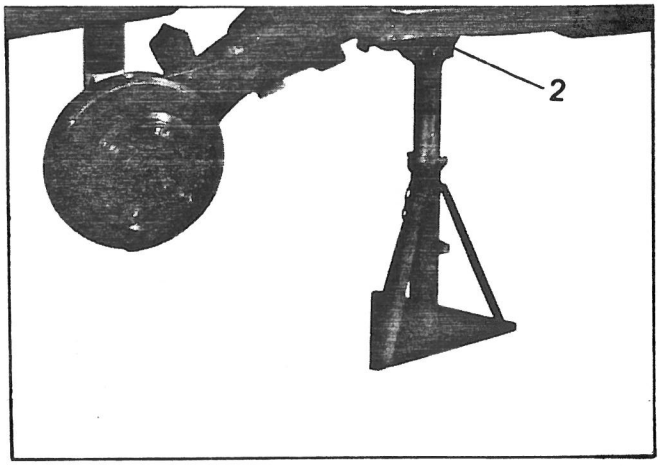

76-584

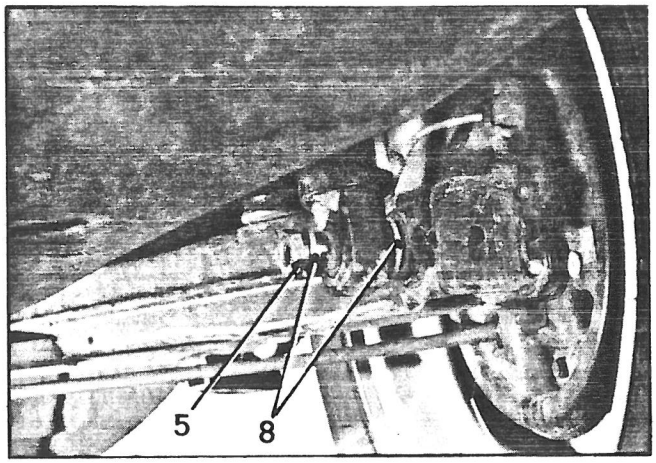

76-497

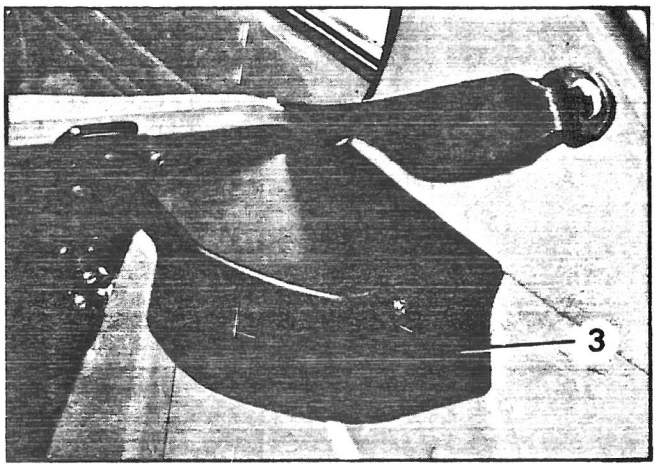

76-581

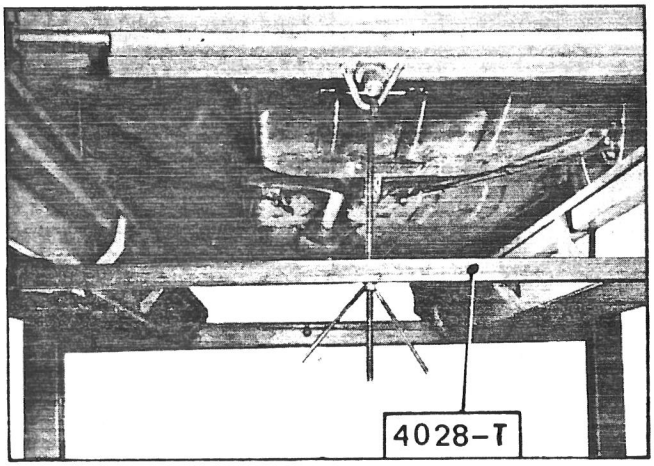

78-498

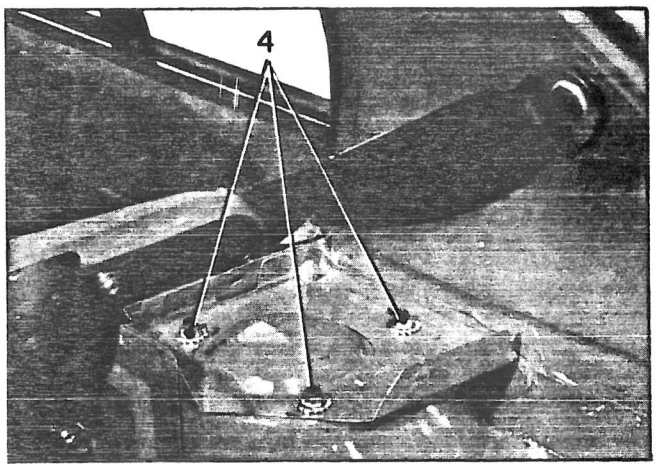

76-583

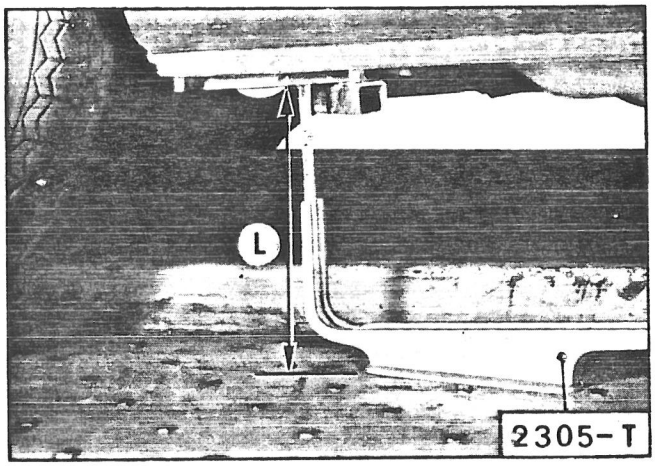

REMOVING AND FITTING A REAR SUSPENSION UNIT

REMOVAL

1. Loosen the wheel nuts.

2. Raise the rear of the vehicle, using lifting beam 8.1509-T. Engage it in attachment loops (1).
Never use other points for lifting.
Insert a locking pin in the lifting beam at « a ».

3. Place the stands under the jacking points (2) and remove the wheel.

4. Remove the following :
- cover (3),
- locking screw (7),
- nut (5) for shock absorber eye,
- the three nuts (4) for upper mounting.

5. Free shock absorber eye (6), and remove the suspension unit.

FITTING

6. Engage the suspension unit into its upper and lower mountings (on the lower mounting, place a plain washer (8) at each side of the suspension unit).
Fit nut (5) without tightening.
Tighten upper nuts (4) from **0.75 to 1.25 m.daN (5.5 to 4 ft lb).**
Fit cover (3);

7. Fit the wheel and raise the vehicle, using a car lift.

8. Using tool 4028-T, compress the suspension so as to obtain **L = 194 mm (7.637 in).**

9. Tighten the following :
- nut (5) for shock absorber from **3 to 4 m.daN (22 to 29.5 ft lb),**
- locking screw (7) from **3.5 to 4 m.daN (26 to 29.5 ft lb).**

10. Check the tightening of the wheel nuts.

OPERATION
VD. 441-1

REMOVING AND FITTING THE ANTI-THEFT DEVICE

REMOVING AND FITTING THE ANTI-THEFT DEVICE

REMOVAL

1. Disconnect the earth cable from the battery.

2. Remove lower cover (2) (four screws).

3. Remove gasket (1).

4. Remove screw (3).

5. Using the ignition key, set the barrel lock to « G » position (garage).

6. Push stud (➡) in, remove the anti-theft from its housing, once it has been disconnected.

FITTING

7. Fit the anti-theft in its housing, with the lock barrel on « G » position (garage), then connect it.

8. Position the anti-theft so as to let the stud protrude, and fit screw (3).

9. Fit lower cover (2).

10. Fit gasket (1).

11. Connect the earth cable to the battery.

78-166

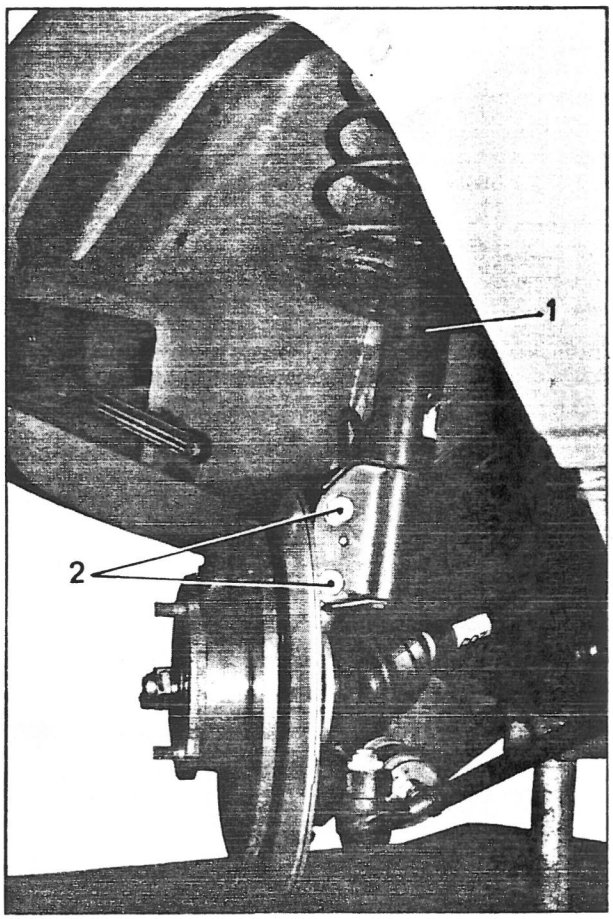

78-170

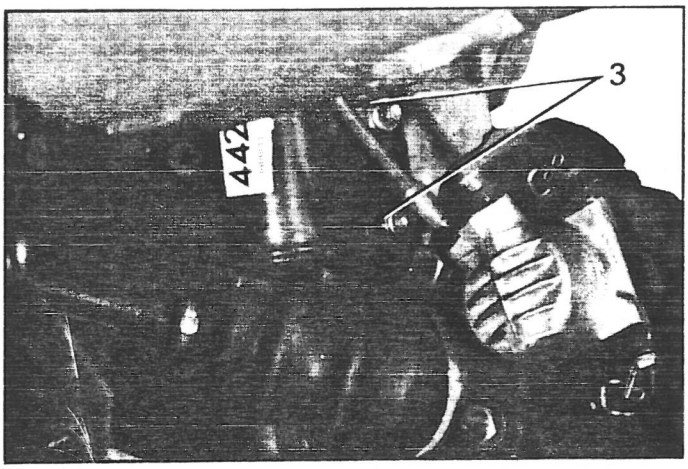

78-169

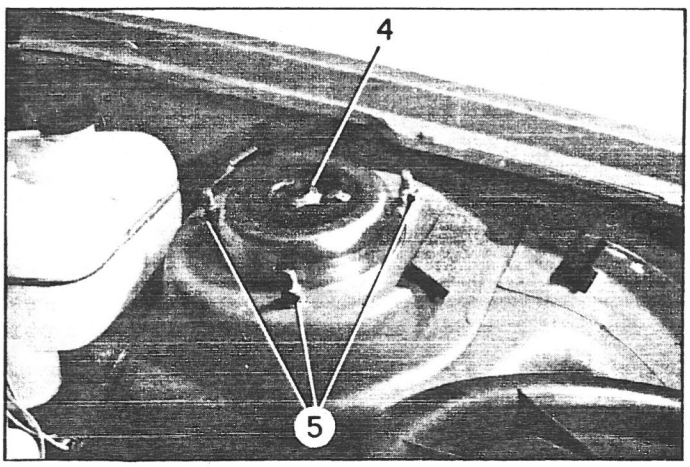

OPERATION
VD. 451-1

WORKING ON THE FRONT BRAKES

REMOVING AND FITTING THE FRONT BRAKE PADS

REMOVAL

Raise and place the front of the vehicle on stands located at jacking points.
Remove the front wheels.

I- CITROËN BRAKE UNITS

1. Remove the following :
- clip (3),
- pin (1),
- retaining spring (2).

2. Disconnect the leads from the brake pad wear warning lamp.

3. Remove pads (4).

FITTING

There should be no oil nor grease marks on the discs and pads.

4. Wipe the pistons and push them fully into their housing (use a tool like FACOM D 60 or a similar one).

Beware of a possible overflowing of the master-cylinder.

5. Fit pads (4).

6. Connect the leads to the brake pad wear warning lamp.

7. Fit the following :
- retaining spring (2),
- pin (1),
- clip (3).

Make sure that the position at « a » of the brake pad wear lead is correct. It should not come into contact with the disc.

8. Fit the wheels and lower the vehicle to the ground.

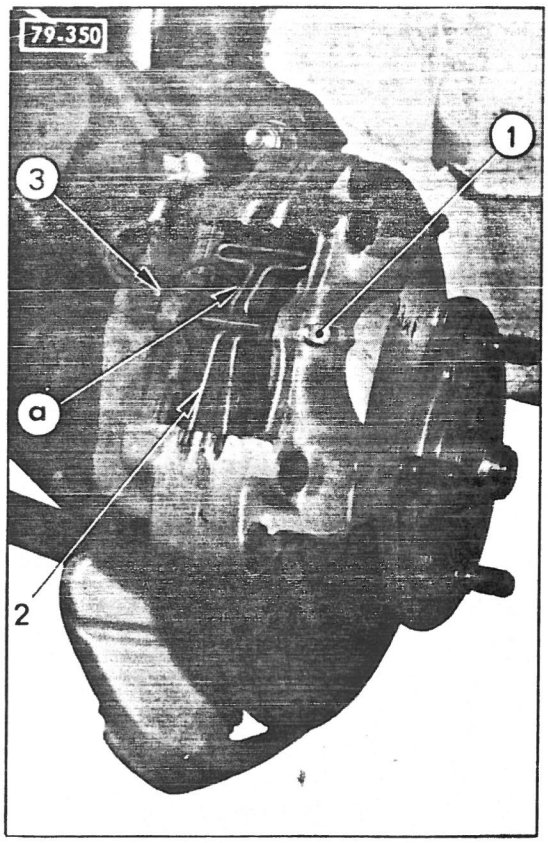
79.350
1
3
a
2

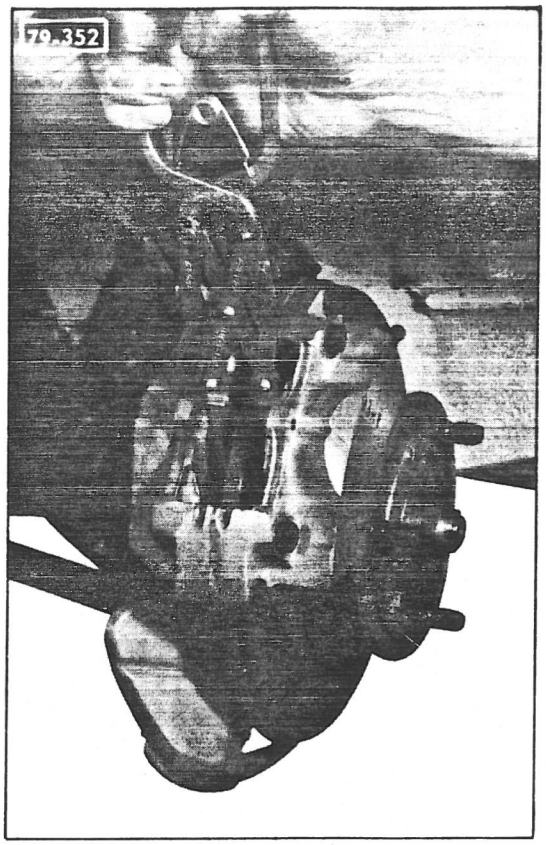
79.352

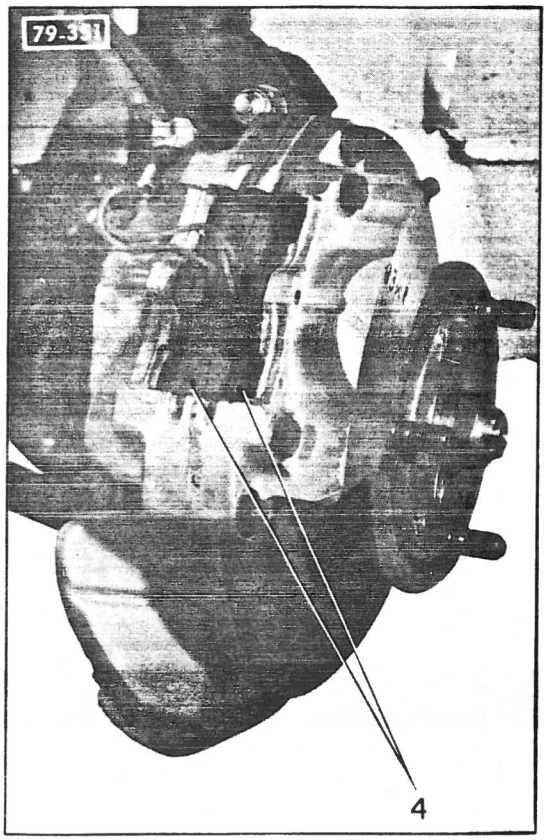
79.351
4

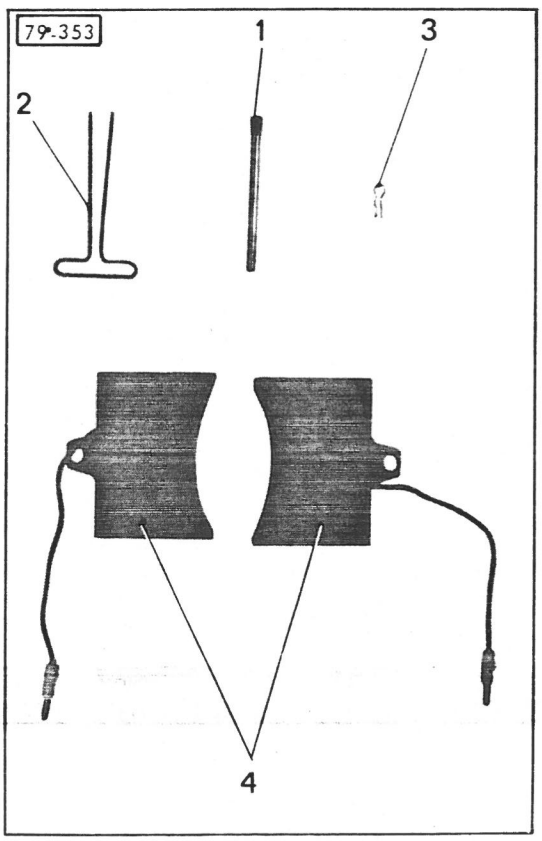
79.353
1
3
2
4

76-991

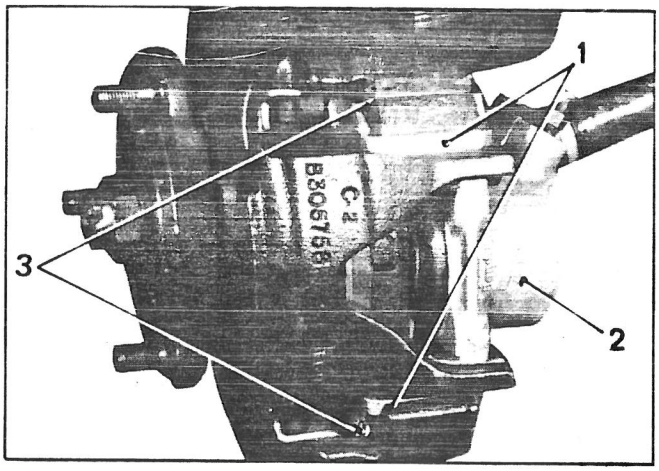

76-994

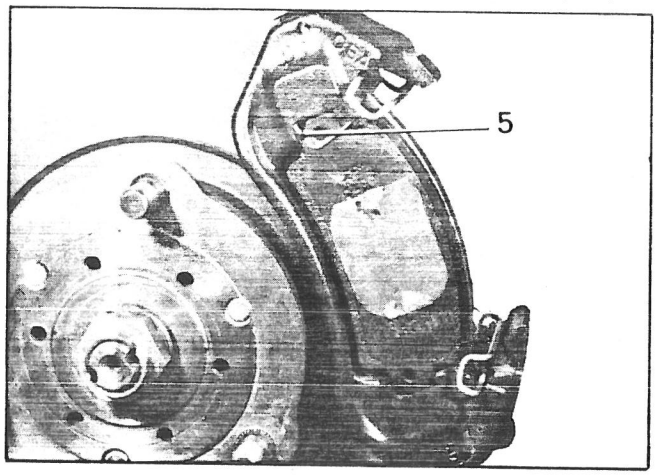

76-992

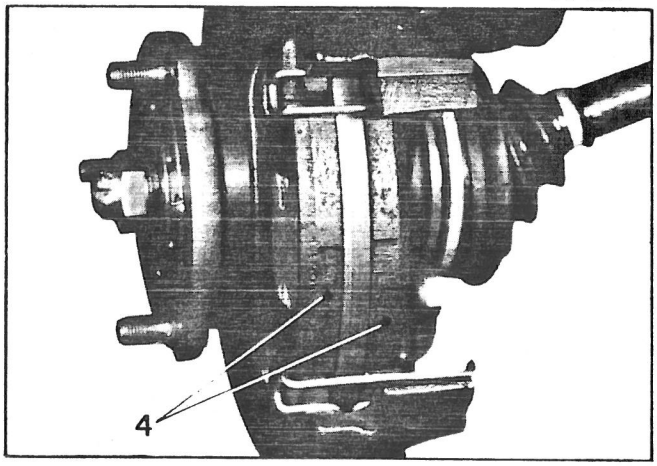

76-993

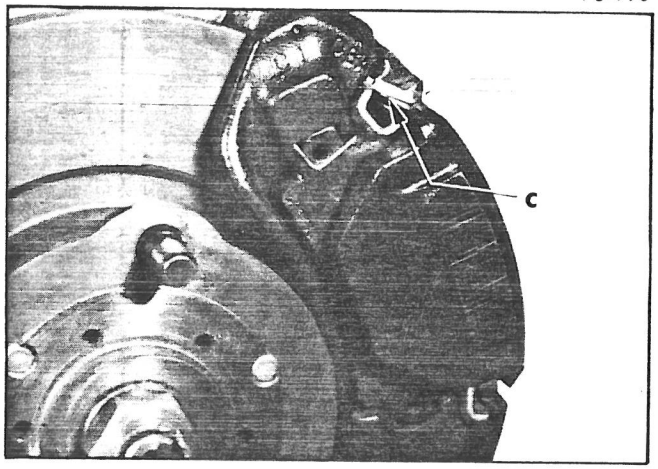

76-990

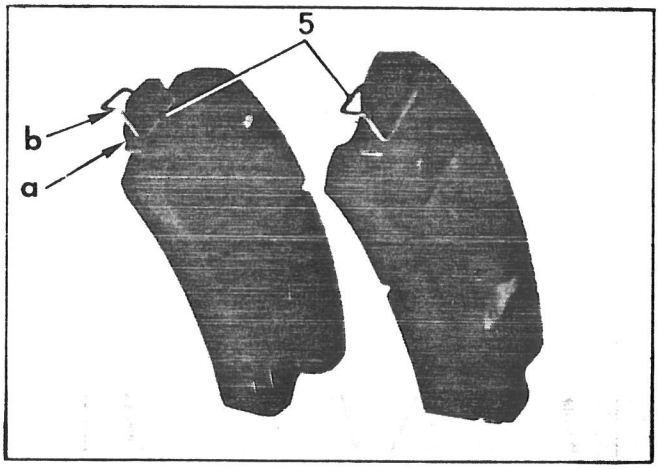

II- BENDIX BRAKE UNITS

1. Remove the following :
- clips (3),
- keys (1).

2. Withdraw sliding cylinder (2) and position it uppermost. **(Do not open the hydraulic circuit** if no operation is to be carried out on the cylinder).
Remove pads (4).

FITTING

There should be no oil nor grease marks on the discs and pads.

3. Fit springs (5) on the pads, positioning transverse section « b » above notch « a ».

4. Fit the pads, with springs (5) upwards.

5. Fit the following :
- sliding cylinder (2), with piston fully pushed home,
- keys (1) smeared with LOCTITE HI-LUB-HTC,
- *new* clips (3).

Sections « c » of the retaining springs should rest under the cylinder slideways. They should not be inserted between the keys and slideways.

6. Bleed the brakes *if an operation has been carried out on the hydraulic cylinder.*
(See Op. VD. 453-0).

OPERATION
VD. 451-4

WORKING ON THE REAR BRAKES

813-1 (II)

SPECIAL TOOLS

TOOLS SOLD

8.0803-T : Tool for removing the side retaining springs.

8.1509-T : Lifting beam for rear of vehicle.

76.709

8.0803-T

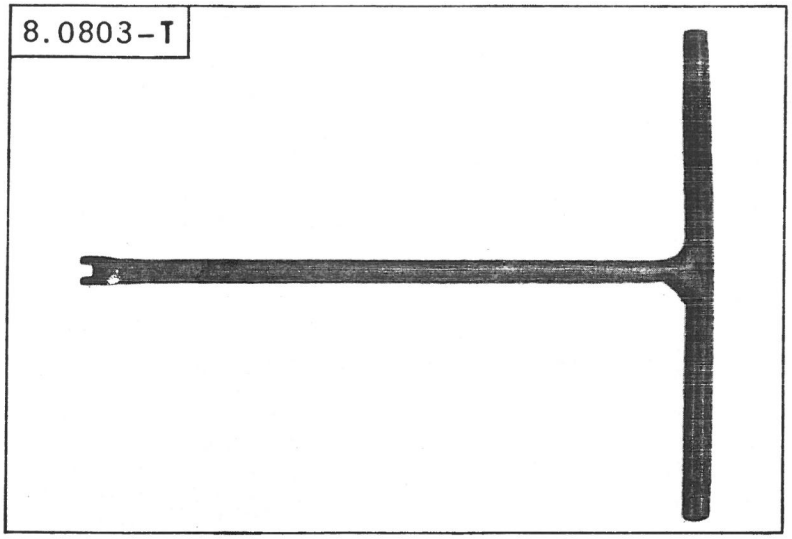

76-656

8.1509 - T

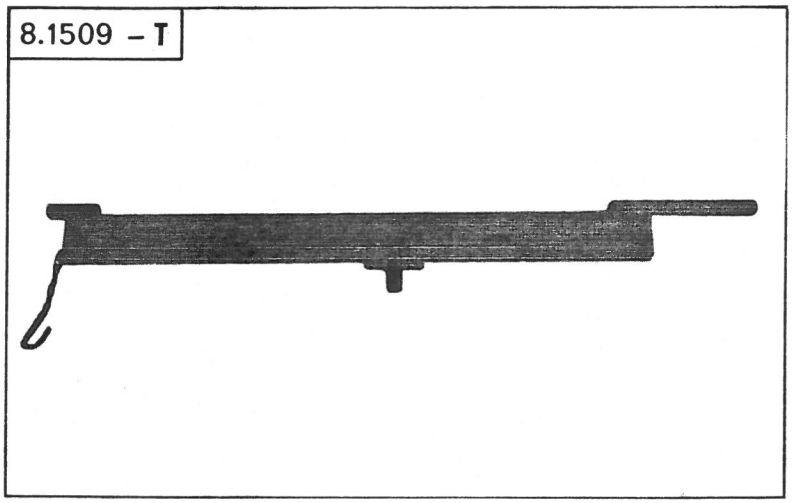

78-475

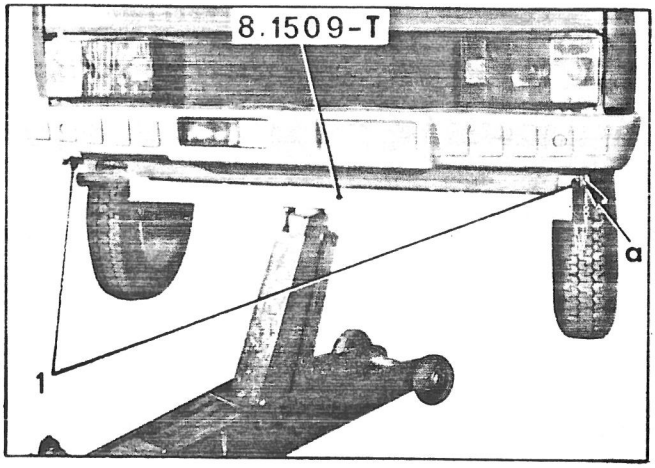

76-980

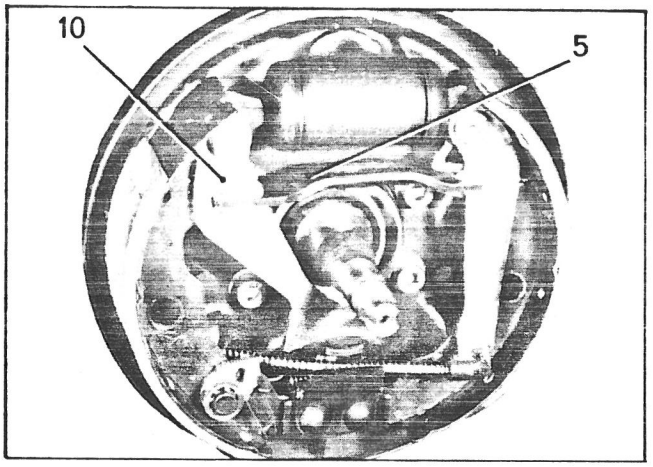

78-476

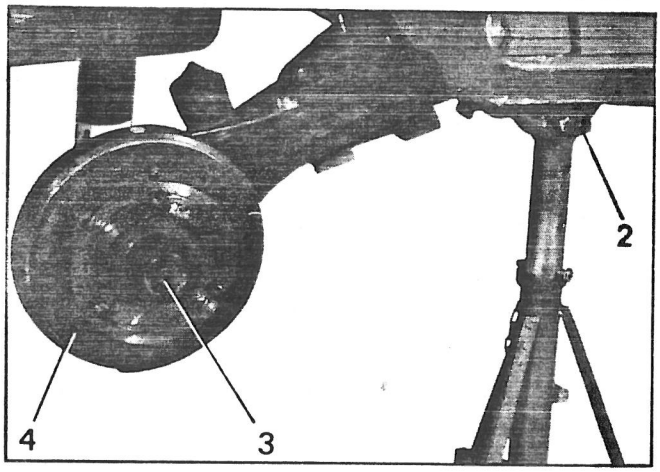

76-982

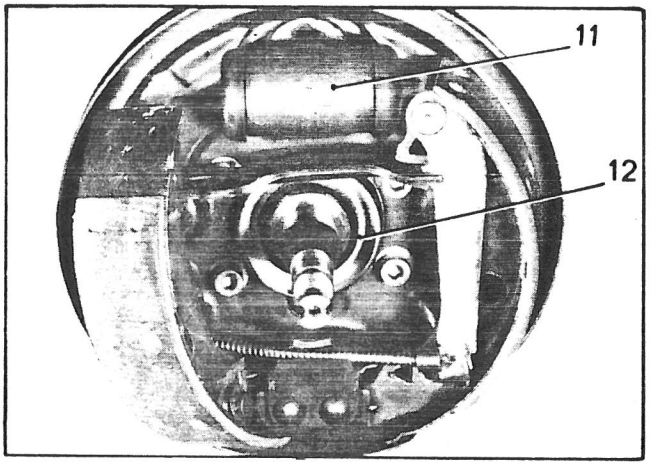

76-506

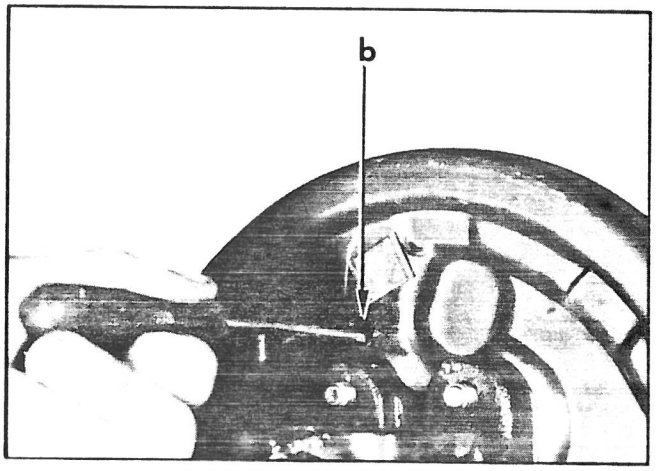

77-337

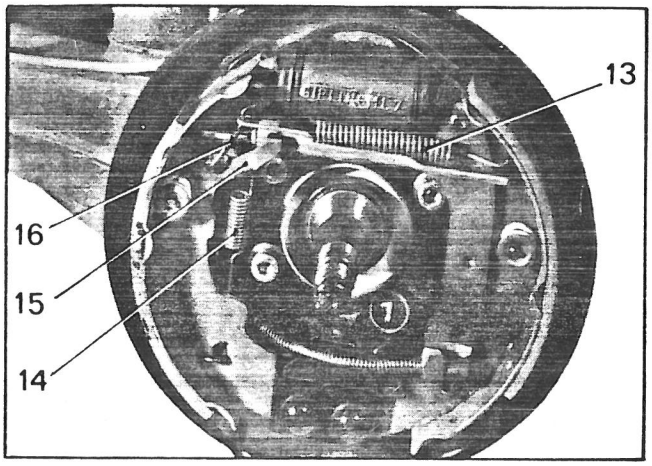

76-505

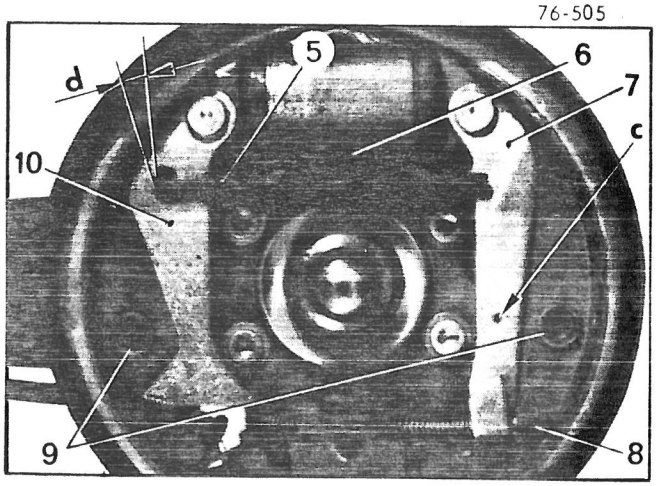

77-335

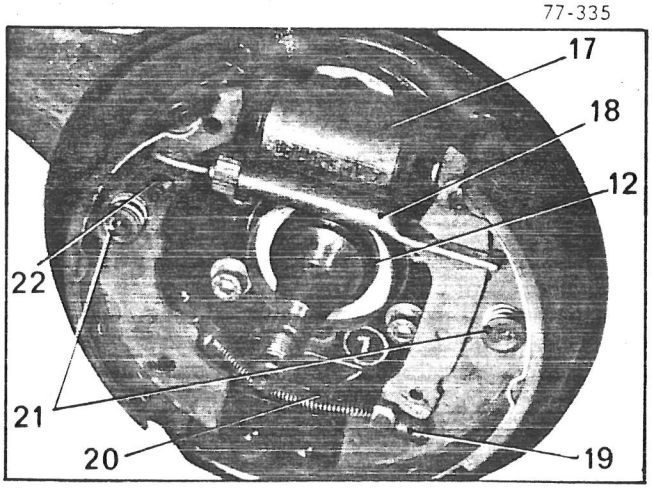

REMOVING AND FITTING THE BRAKE SHOES

REMOVAL

1. Loosen the nuts on the rear wheels.

2. Jack up the vehicle, using lifting beam 8.1509-T
Engage it in attachment loops (1).
Never use other points for lifting.
Insert a locking pin in the lifting beam at « a ».

3. Place the stands under jacking points (2) and remove the wheels.

4. Remove the following :
- cap (3),
- brake drum (4).

If the dismantling is uneasy, operate as follows :
remove the rubber plug at « b », engage a screwdriver in the hole and exert a side pressure on handbrake lever (7) so as to free thrust stud « c » in order to obtain the withdrawal of the brake shoe linings.
Refit the rubber plug.

D.B.A. FITTING

5. Remove spring (6).
Disconnect handbrake cable (8).

6. Check end play « d » of link rod (5) in adjusting lever (10). It should be :
1 to 1.2 mm (0.039 to 0.047 in)

7. Unhook springs (9) by using tool 8.0803-T

8. Tilt lever (10) towards the stub axle.
Pull link bar (5) outwards so as to free it.
Bring lever (10) back to its original position.
Take off the brake shoes.

9. Remove wheel cylinder (11) *if need be.*
Remove sealing ring (12).

GIRLING FITTING

10. Remove the following :
- springs (13) and (14),
- springs attachment (16),
- pawl (15),
- thrust washer (22),
- link rod (18),
- thrust spring retaining cups (21).

11. Disengage handbrake cable (19).

12. Remove the brake shoes together with spring (20).
Keep in mind the way the spring was hooked.

13. Remove wheel cylinder (17), *if need be.*
Remove sealing ring (12).

FITTING

There should be no oil nor grease marks on the drums and shoe linings.

D.B.A. FITTING

14. Fit the following :
- adjusting lever (2) outside the leading shoe. *New clamp (1),*
- catch (3),
- spring (4),
- a *new* lock ring (5).

15. Fit handbrake lever (7) outside the trailing shoe; lock it with a *new* clamp (6).

16. Fit the following :
- spring (9) inside,
- link bar (8), with flanged edges « a » facing upwards.

NOTE : The **right-hand** link bars are different from the **left-hand** ones.

17. Position spring (10) on both brake shoes *(hook it from underneath).*

18. Fit the wheel ylinder, *if need be.*
Engage the brake shoes, positioning spring (10) behind lug (11); tilt lever (2) towards the stub axle so as to make link bar (8) hooking possible.

19. Bring back lever (2) in abutment against the shoe.
Fit spring (12) *(Hook it from above).*
Connect handbrake cable (13).

20. Fit the following :
- *new* springs (14) (horizontal attachment lug),
- a new sealing ring (15), with lip « b » facing outwards.

GIRLING FITTING

21. Fit the following :
- the wheel cylinder, *if need be,*
- a new sealing ring (15), with lip « b » facing outwards.

22. Fully screw up end piece (21) of link rod (18).

23. Hook up spring (19) on both shoes.

24. Engage the following :
- the brake shoes, positioning spring (19) behind lug (16),
- guide-rods (22) in the shoes.

25. Fit the springs and lock retaining cups (20).

26. Insert handbrake cable (17) in lug (16) and connect it to the lever.

76-978

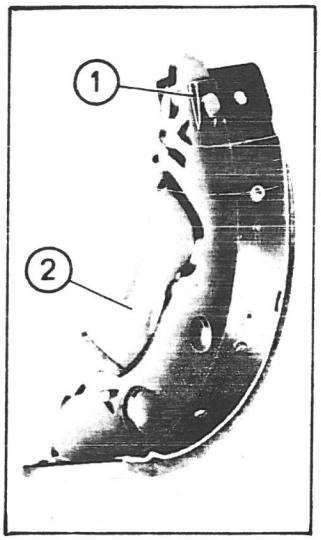

76-977

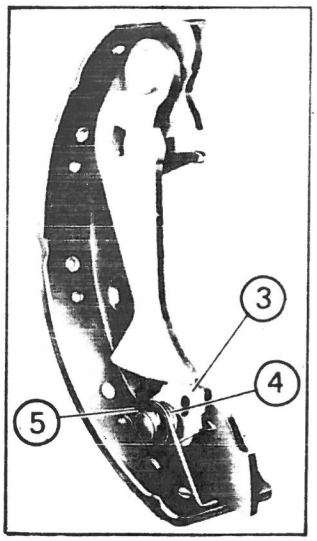

76-975

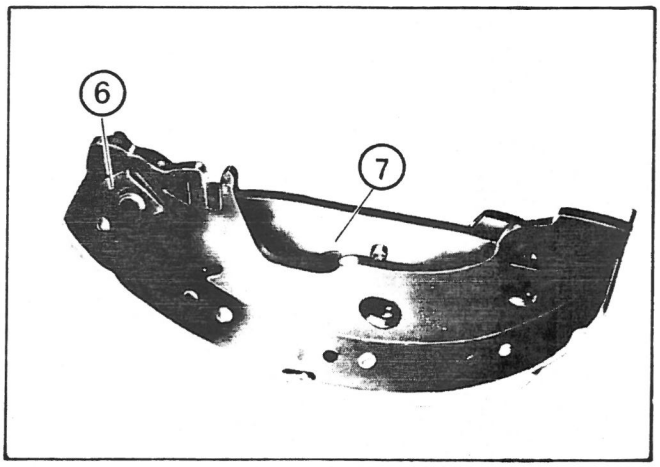

76-974

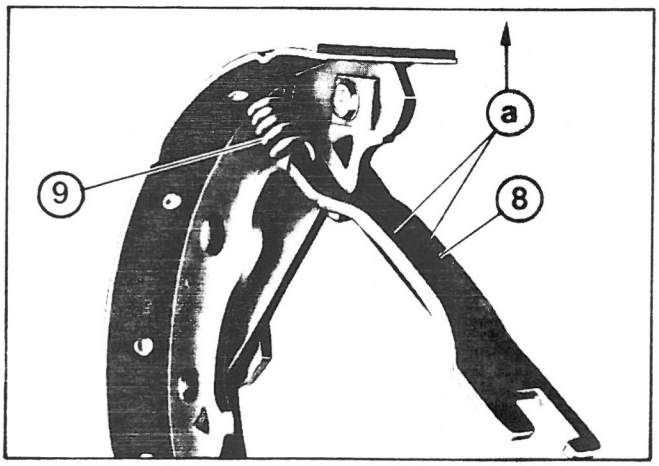

76-979

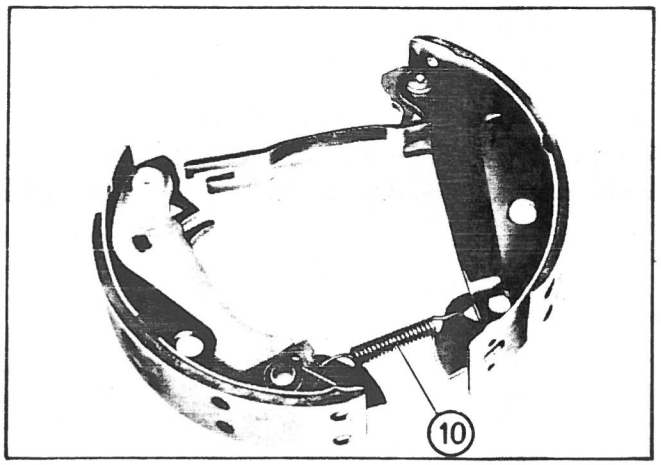

76-997

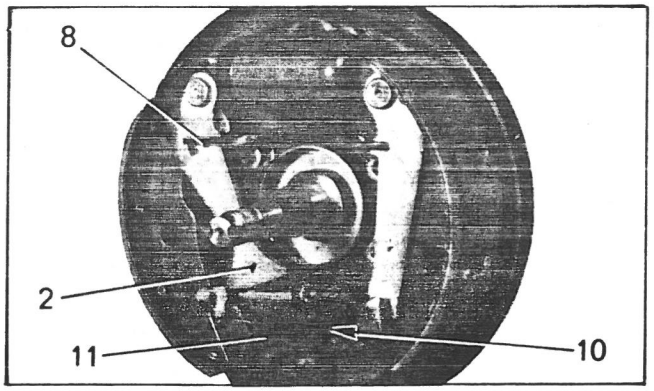

76-998

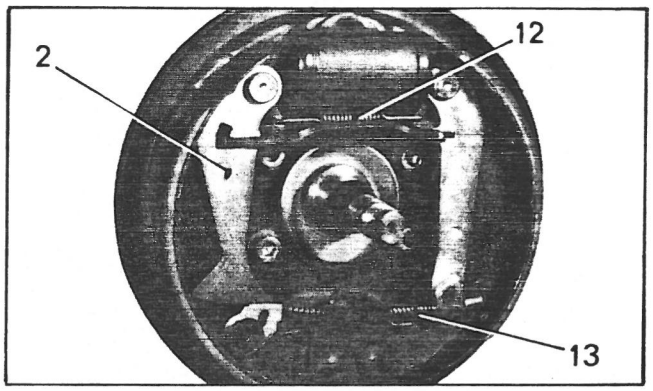

76-999

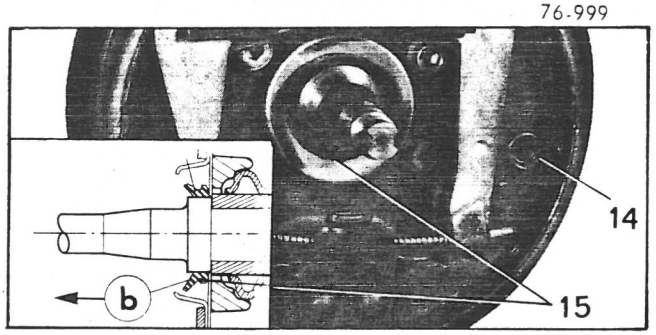

77-338

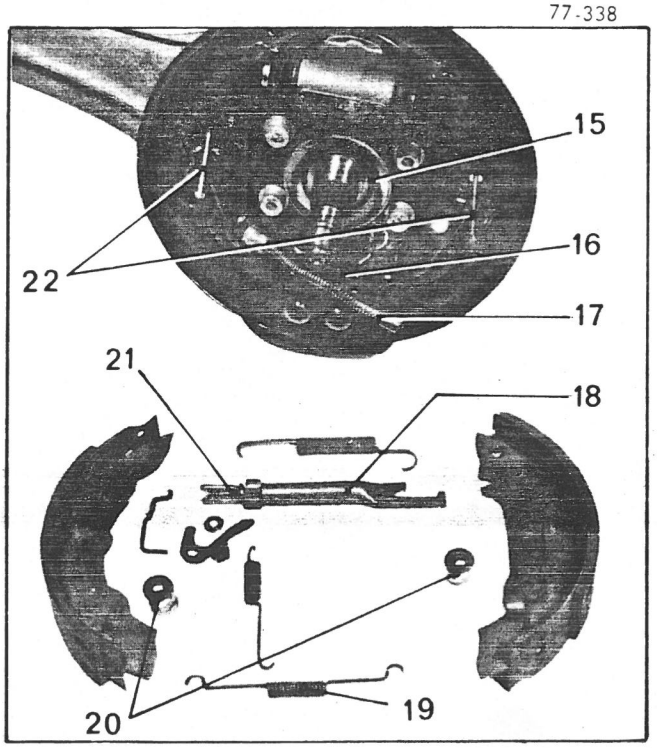

77-339

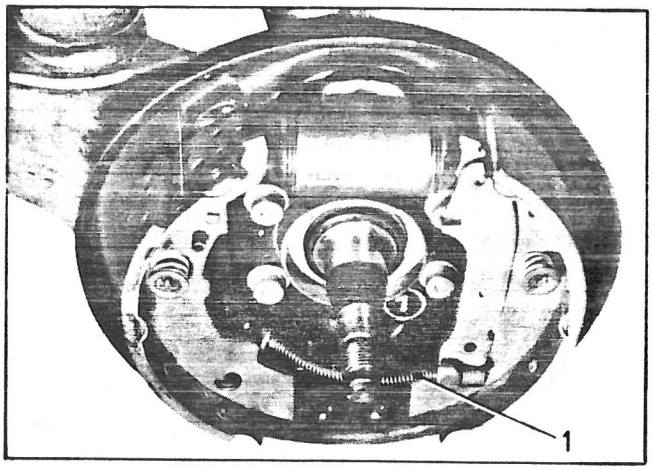

76-1001

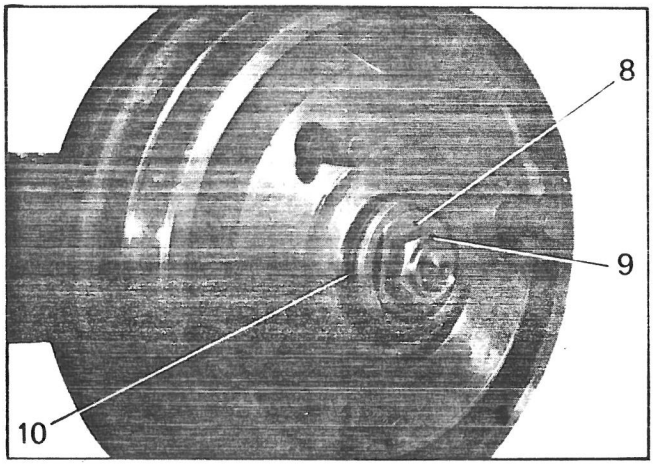

77-337

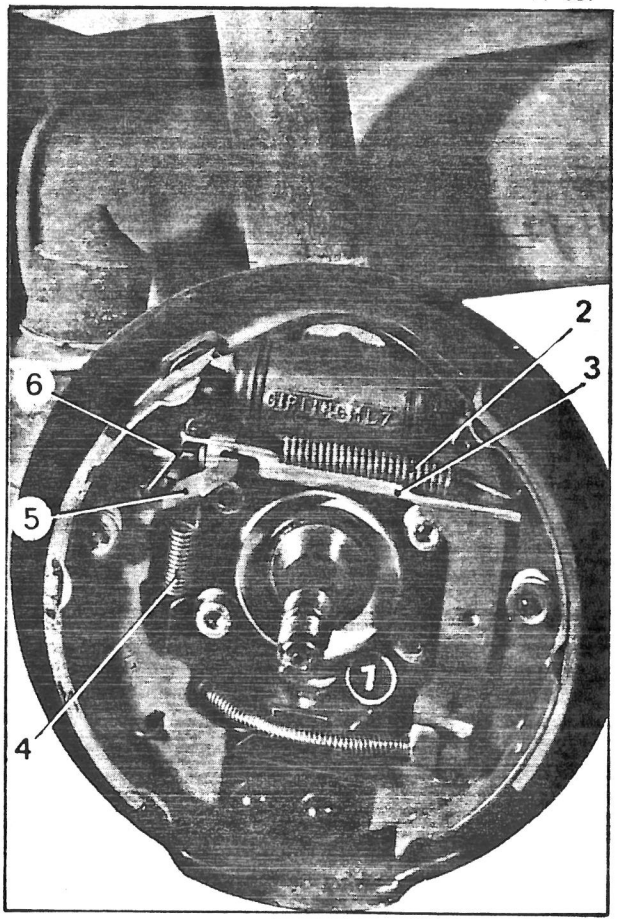

76-1003

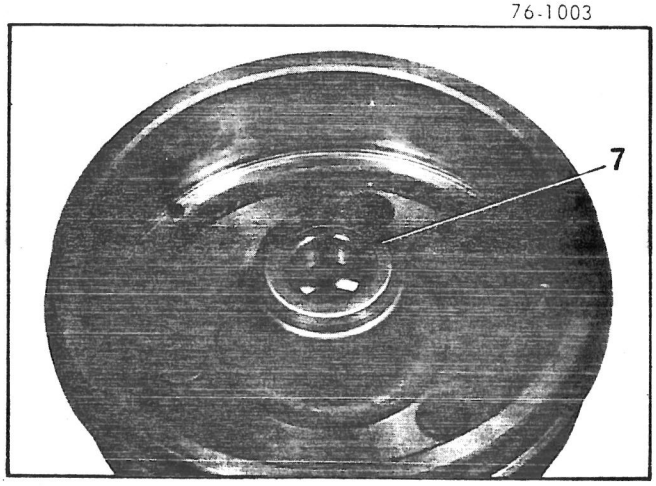

27. Connect handbrake cable (1).

28. Fit the following :
- link rod (3),
- catch (5) with its thrust washer,
- attachment lug (6),
- spring (4),
- spring (2).

Make sure the springs are fitted in the right way, as shown on photo.

29. Fitting the brake drum :

Check the condition of bearing cup (7) for the sealing ring.
Replace it, without fail, if it has been dislodged on removing the brake drum (see Op. VD. 426-3).

a) Grease the roller bearings (TOTAL MULTIS grease).

b) Fit the brake drum and its roller bearings.

c) Fit washer (8)and *new* stub axle nut (9).

30. Adjusting the clearance of brake drum roller bearings :

After positioning the roller bearings, the clearance between nut (9) and thrust washer (8) should be between 0.01 and 0.04 mm (.0039 to .0015 in).

a) Tighten the stub axle nut from **3 to 4 daNm (22 to 29.5 ft lb).**

b) Slacken the nut.

c) By hand, bring the nut into contact with the roller bearing thrust washer, then lock the nut.**The brake drum must be allowed to rotate during the tightening operation.**

Use a tool with a round end in order not to cut the locking flange.
Support the nut during the operation.

31. Fit a *new* sealing ring (10) and the sealing plug.

32. Bleed the rear brakes, *if need be* (see Op. VD. 453-0)

33. Adjust the handbrake (see Op. VD. 454-0).

LIST OF VD1 OPERATIONS IN SECTION II

Operation number	DESCRIPTION
	REMOVAL AND FITTING
VD1. 100-1	Removing and fitting an engine-gearbox unit
VD1. 100-4	Removing and fitting the engine only
VD1. 225-1	Replacing an oil cooler
VD1. 241-1	Replacing a fan (see Op. VD1. 225-1)
VD1. 343-4	Working on the gearbox : - Removing and fitting a gearbox drive outlet shaft or a seal - Removing and fitting gearbox rubber support blocks
VD1. 416-1	Removing and fitting a front hub
VD1. 422-1	Removing and fitting a rear wheel arm
VD1. 442-1	Removing and fitting a steering system

OPERATION
VD1. 100-1

REMOVING AND FITTING AN ENGINE-GEARBOX UNIT

813-1 (II)

SPECIAL TOOLING

TOOLS SOLD

4016-T : Sling

TIGHTENING TORQUES

Recommended tightening torques :

Tightening points	Torque in m.daN
Engine mounting attachment bolts *(contact washer)*	5 to 5.5
Gearbox to rubber mounting attachment nuts *(serrated washer and flat washer)*	6 to 6.5
Drive shafts to gearbox output shaft coupling bolts *(spring washer)*	2.8

76-652

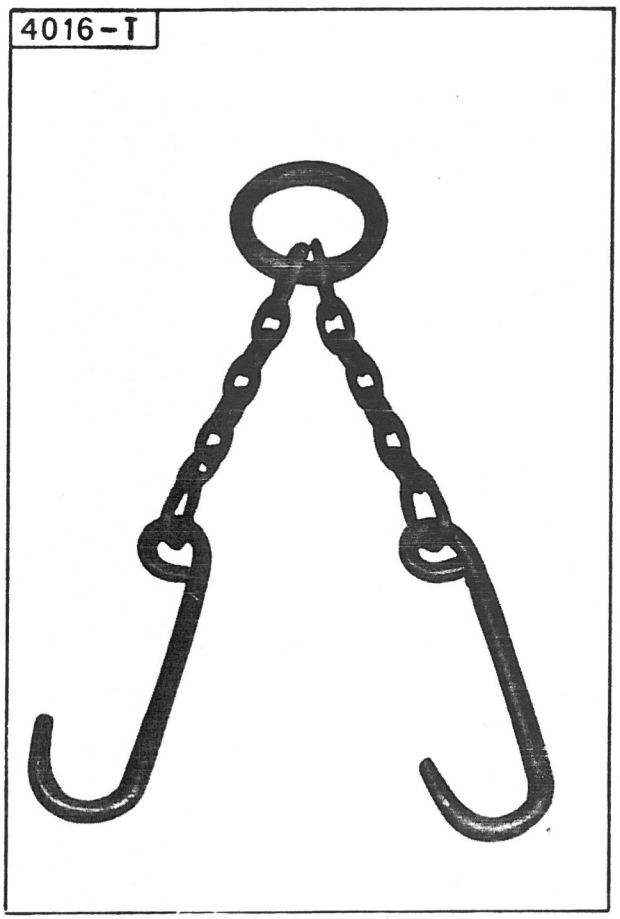

78-60

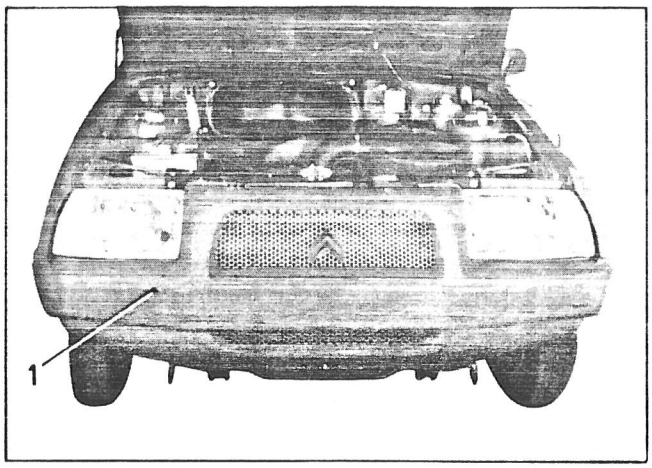

78-83

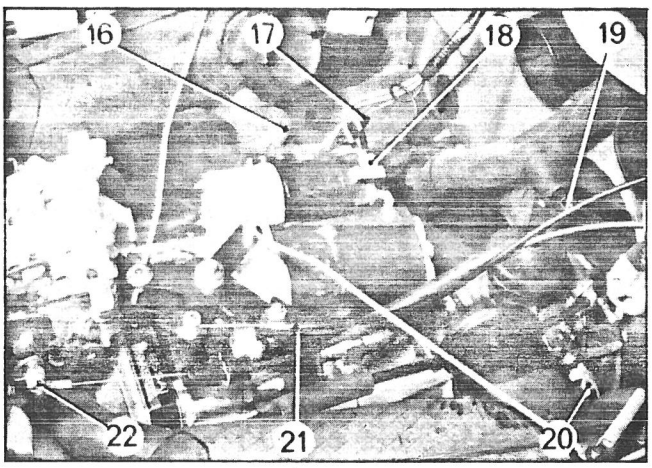

78-65

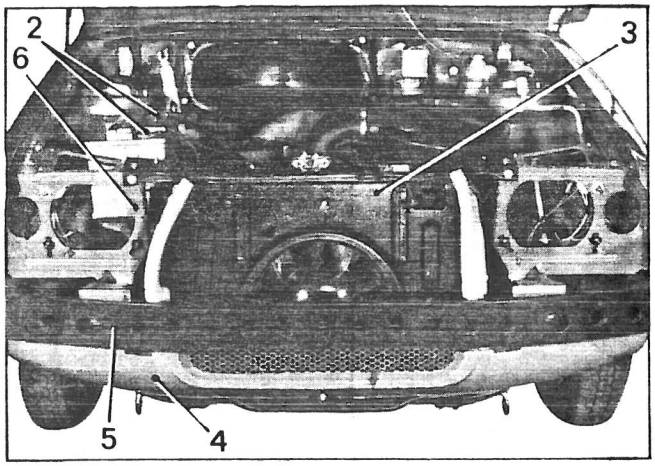

78-70

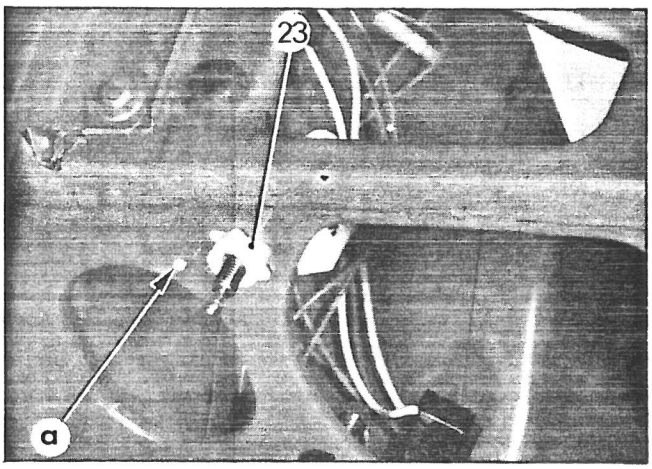

78-69

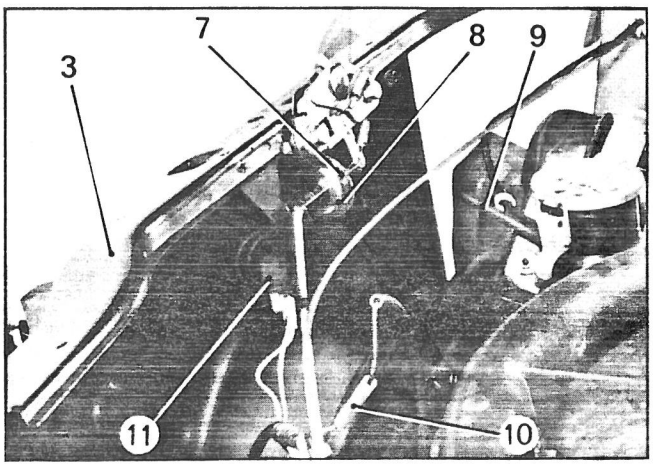

78-86

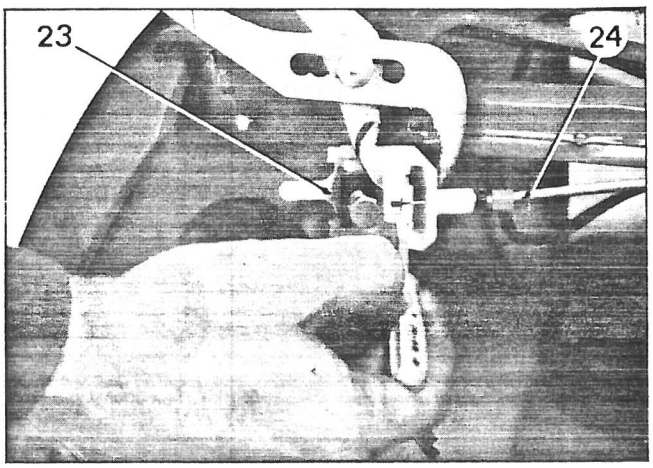

78-85

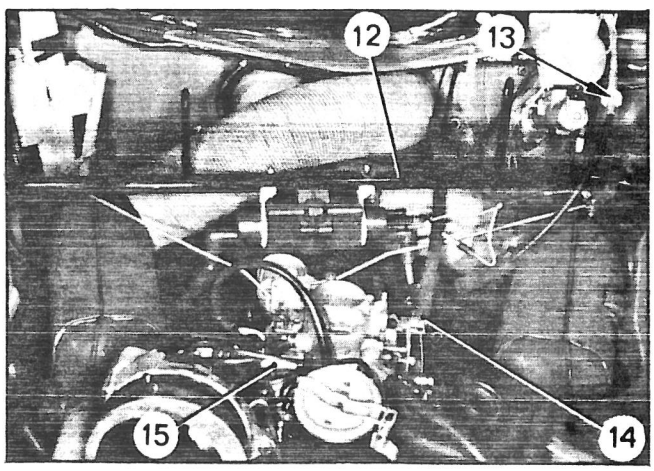

78-82

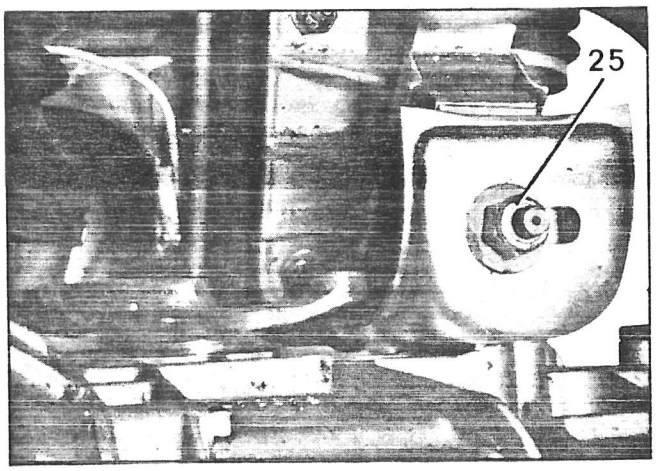

REMOVING AND FITTING AN ENGINE-GEARBOX UNIT

REMOVAL.

1. Remove the spare wheel :
Disconnect the battery leads (2) and the earth from the right headlamp support (6).

2. Remove :
- headlamps,
- the shield (1),
- the bumper (5),
- the lower valance (4).

3. Remove the crossmember (3) and anti-recirculation plate assembly :

a) Disconnect :
- the horn lead,
- the pressure switch lead (10),
- the connector (11).

b) Disconnect :
- the bonnet lock cable (7),
- the hose (9), of the vacuum capsule (8).

4. Remove :
- the air filter,
- the spare wheel and coil support bar (12),
- the heater hoses and air release bellows,
- the exhaust coupling clamps (16).

5. Disconnect :
- the alternator energizing lead and the idle cut-off feed lead,
- the reversing lamp switch wires (20),
- the starter feed leads (18),
- the connectors from sensors (17) on the clutch housing.

6. Disconnect :
- the speedometer cable at (13),
- the choke cable (14),
- the accelerator cable (22),
- the heater control cable (21),
- the speed control (19),
- the petrol pump feed hose from the sidemember piping *(blank off the piping)*,
- the clutch cable, from the fork.

7. Disconnect the right headlamp positioning control cable :

a) Press the stud at « a » to release, and then turn the adjustment unit (23) to remove.

b) Release the cable (24) from the adjustment unit (see photo).

c) Release the cable (24) from the headlamp support (6).

8. Disconnect the drive-shafts from the gearbox.

9. Remove the engine-gearbox unit attachment nuts and bolts :

a) Remove the nuts (25) from the gearbox side supports.

b) Remove the front engine support attachment bolts.

10. Offer up the hoist with a sling 4016-T

11. Remove the engine-gearbox unit.

FITTING

12. Offer up the engine-gearbox unit (sling 4016-T)

13. If during removal stud « a » is left on the nut, refit the stud by positioning the fork so that the narrowest part points downwards and the rear faces the rear of the car.

14. Fit the gearbox support nuts (1) and the front engine support bolts, but do not tighten. Tighten nuts (1) to : **6 to 6.5 m.daN.**
Tighten the front support bolts to : **5 to 5.5 m.daN.**

15. Couple the drive shafts to the gearbox drive outlet shafts.
Tighten the bolts (2) to : **2.8 m.daN.**

16. Connect :
- the gear-change lever (7),
- the choke cable,
- the accelerator cable (9),
- the speedometer cable (12),
- the petrol flexible hose,
- the heater control cable (10),

(Check flap operation and adjust control if necessary).

17. Connect :
- the alternator lead (14) and the idle cut-off lead (13),
- the reversing lamp switch leads (8),
- the starter leads (6),
- the sensor from connectors (5) on the clutch housing.

18. Connect up the clutch cable (3) and adjust the clutch clearance :
Clearance between the thrust bearing and toggles = 1 to 1.5 mm.
This gives a 20 to 25 mm play in the pedal.
Clip on the nylon protective cover.

19. Connect the right headlamp positioning control cable :

a) Engage the cable (15) into the support (17) of the right headlamp.

b) Offer up the adjustment unit (14), connect the cable to the unit.

c) Engage the adjustment unit (14), then turn until stud « b » snaps into position.

20. Fit :
- the exhaust clamps (4),
- the heater hoses and the air release bellows,
- the spare wheel and coil support bar (11),
- the air filter.

21. Fit the crossmember and anti-recirculation plate assembly :

a) Connect :
- the horn lead,
- the pressure switch lead (21),
- the connector (22).

b) Connect :
- the bonnet lock cable (19),
- the hose (20) to the vacuum capsule (18).

22. Fit :
- the lower valance (24),
- the bumper (23),
- the shield,
- the headlamps.

23. Connect up the battery cables (26) and the earth (25) to the right headlamp support.

24. Fit the spare wheel.

25. Adjust the headlamps.

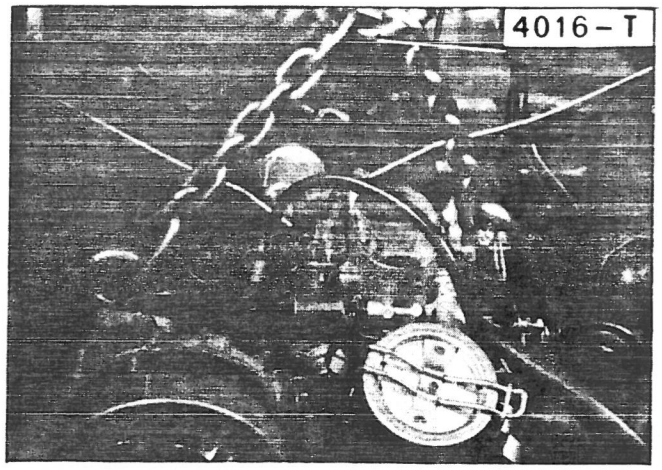

78-88

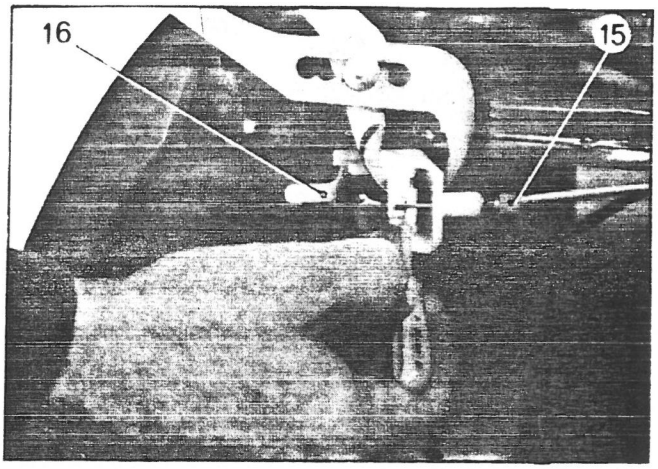

78-86

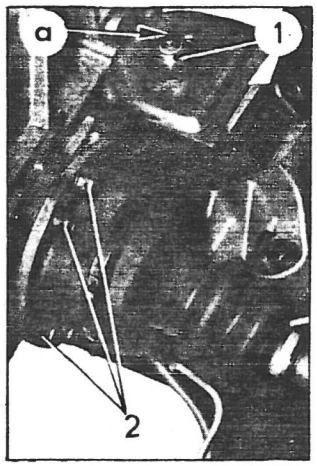

78-105

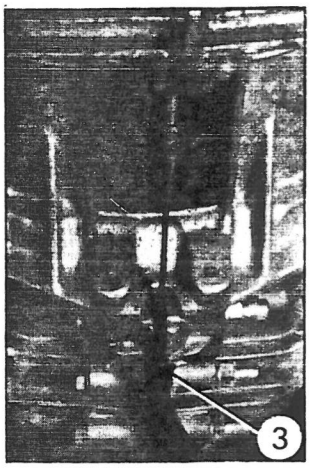

76-550

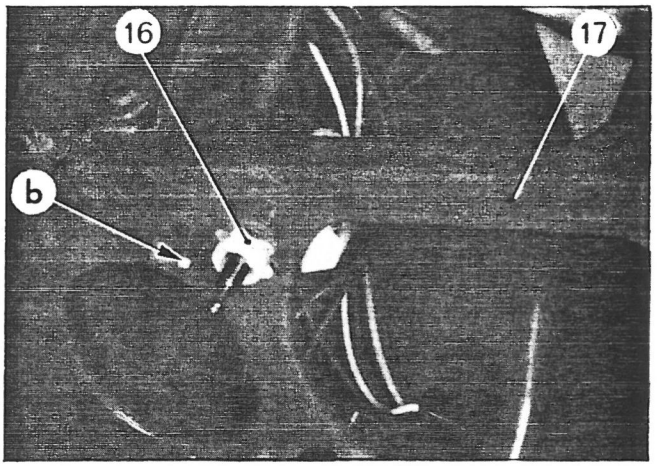

78-70

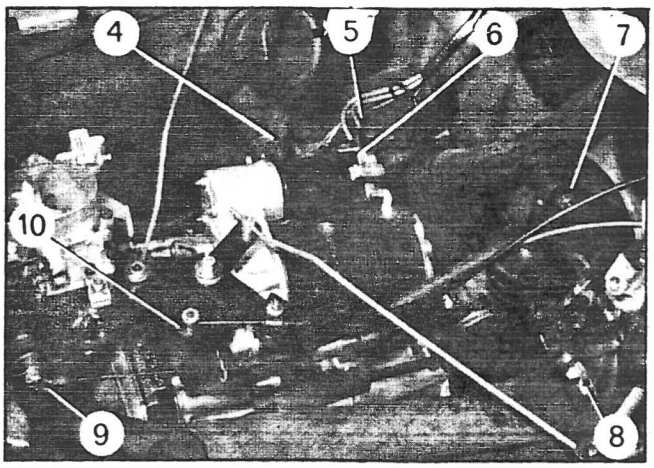

78-83

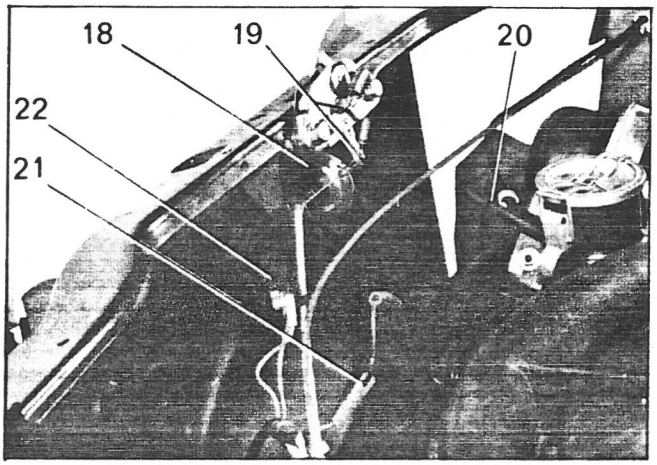

78-69

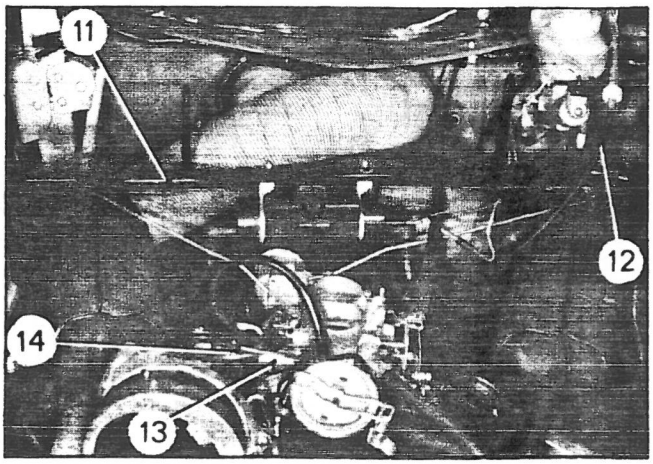

78-85

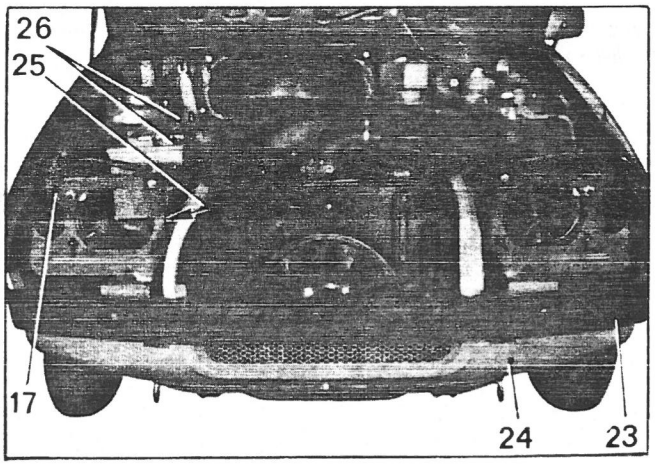

78-65

OPERATION
VD1. 100-4

REMOVING AND FITTING THE ENGINE ONLY

SPECIAL TOOLING

TOOLS SOLD

4016-T : Sling

TIGHTENING TORQUES

Recommended tightening torques :

Tightening point	Torque in m.daN
Engine support attachment bolt *(contact washer)*	5 to 5.5
Engine-gearbox assembly stud nuts	3 to 3.5

76-652

4016-T

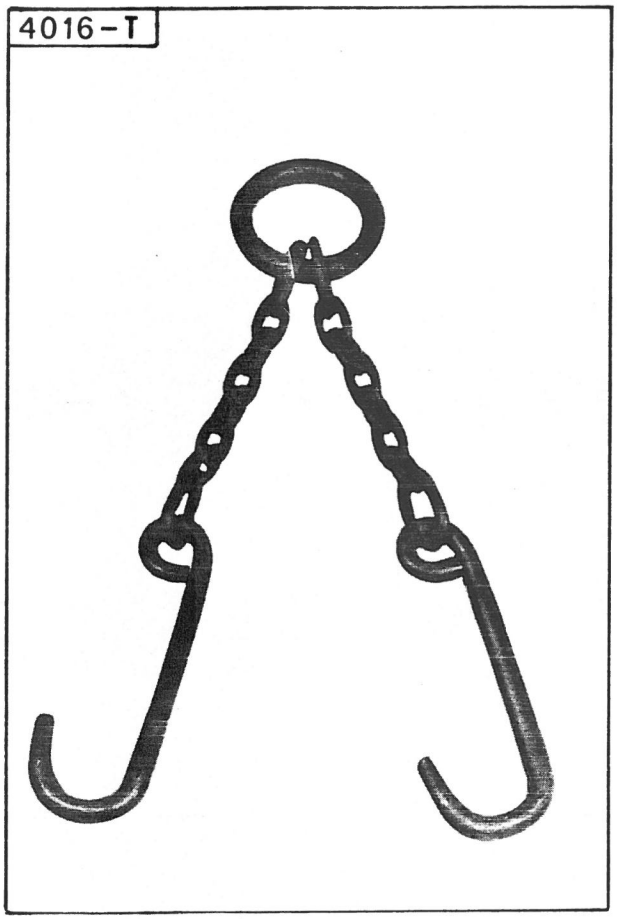

78-60

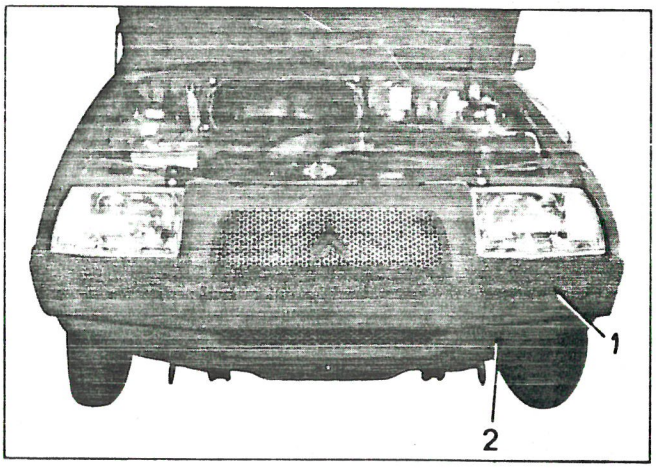

78-83

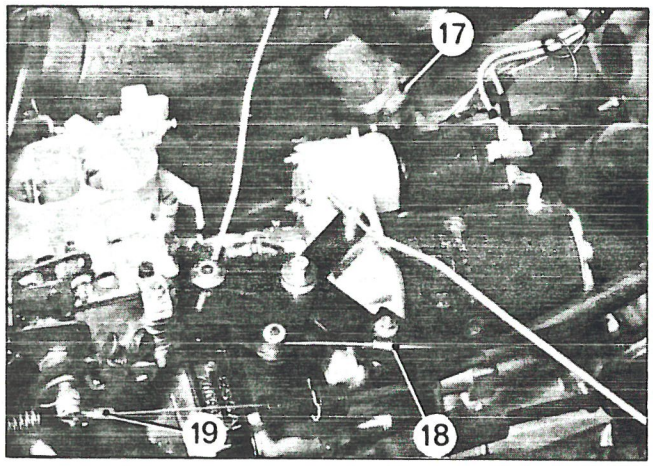

78-65

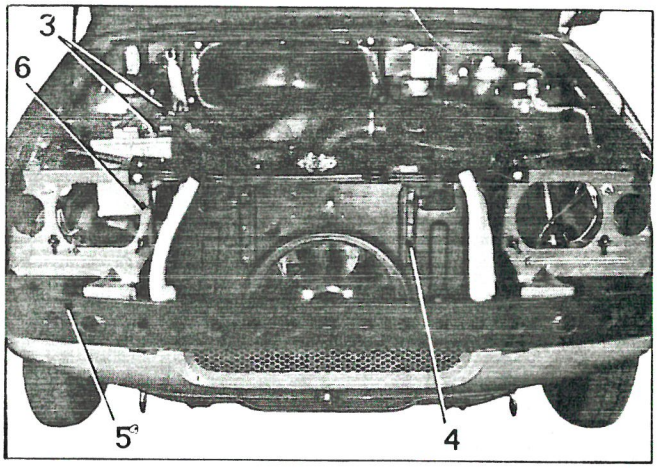

78-70

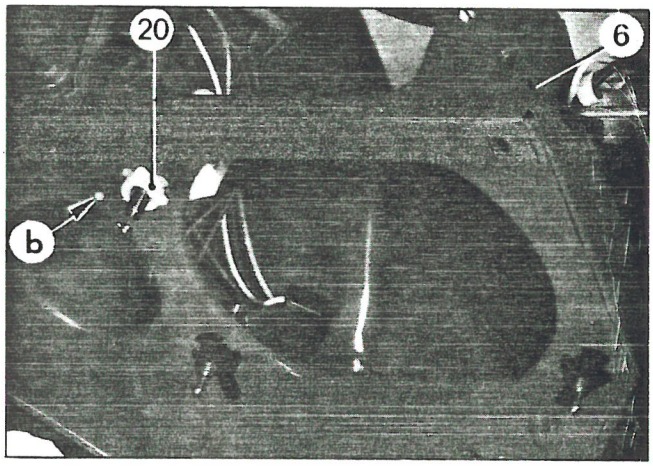

78-69

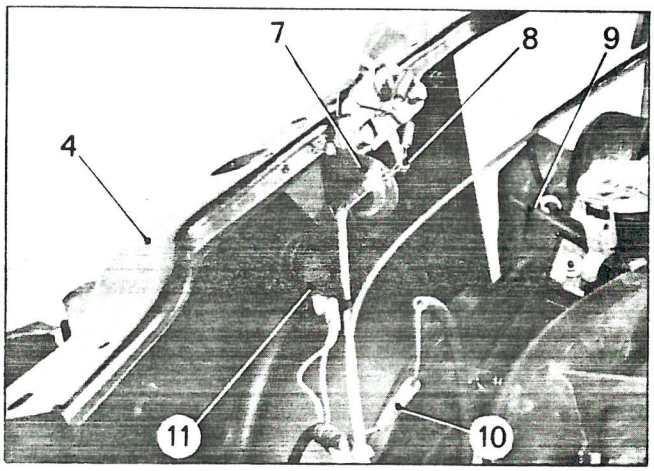

78-86

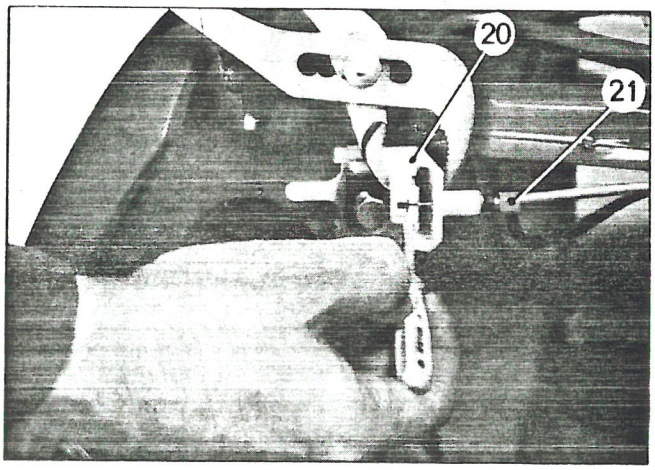

78-85

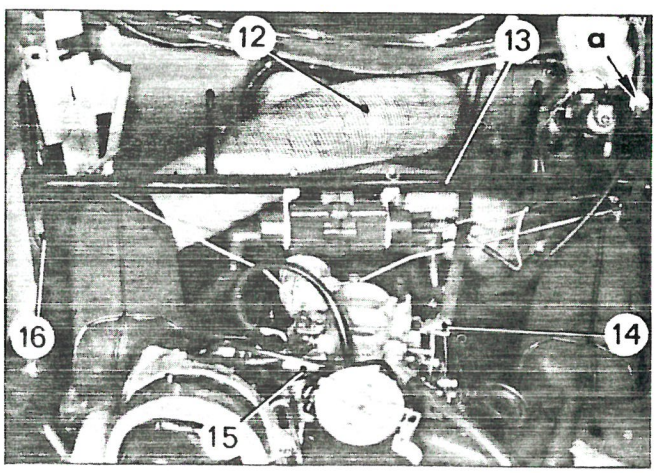

78-88

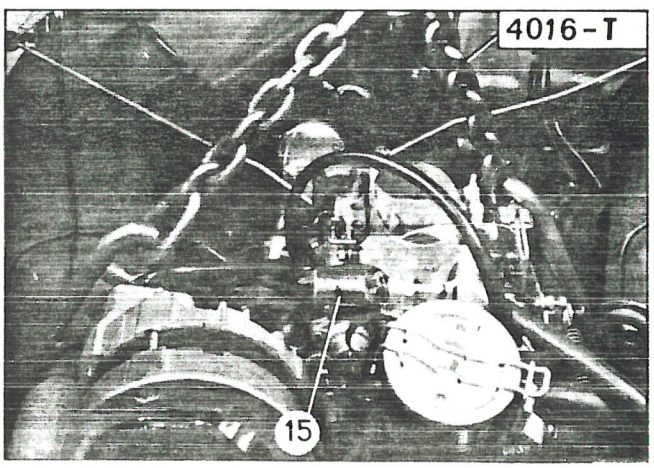

REMOVING AND FITTING THE ENGINE ONLY

REMOVAL.

1. Remove the spare wheel.
Disconnect the battery cables (3) and the right headlamp support (6) earth.

2. Remove :
- the headlamps,
- the shield (1),
- the bumper (5),
- the lower valance (2).

3. Remove the crossmember and anti-recirculation plate assembly (4) :

a) Disconnect :
- the horn lead,
- the pressure switch lead (10),
- the connector (11).

b) Disconnect :
- the bonnet opening cable (8),
- the vacuum capsule (7) flexible hose (9).

4. Remove :
- the air filter,
- the spare wheel and coil support bar (13),
- the heater hoses (12), the air release bellows (16),
- the exhaust coupling clamps (17).

5. Disconnect :
- the alternator excitation lead and the idle cut-off lead (15),
- the starter positive lead.

6. Disconnect :
- the choke cable (14),
- the accelerator cable (19),
- the heater control cable (18),
- the speedometer cable at « a »,
- the pump petrol feed flexible hose, from the side-member piping *(blank the piping)*,
- the fork clutch cable.

7. Disconnect the right headlamp positioning control cable :

a) Press stud at « b » to release it, and then turn the adjustment unit (20) to remove it.

b) Release cable (21) from the adjustment unit (see photo).

c) Release the cable (21) from the right headlamp support (6).

8. Remove the front engine support mounting bolts.

9. Offer up the lifting apparatus fitted with sling

4016-T and raise the engine-gearbox unit.

Support the gearbox unit from underneath so that there is a clearance between the crankcase and the front crossmember.

10. Remove the engine-gearbox assembly stud nuts.

11. Remove the engine by pulling from the front. Ensure that no pressure is exerted on the gearbox drive output shaft.

12. Connect the engine to the gearbox :

a) Check that the centering pins (1) are in position.

b) Offer up the engine to the gearbox, engage the end of the output drive shaft in the pre-greased crankshaft ring.

c) Tighten the assembly stud nuts to **3 to 3.5 m.daN.**

13. Remove the support bar (A) located under the gearbox and lower the engine onto the front cross-member.
Tighten the front rubber mounting block bolts to **5 to 5.5 m.daN** *(lugged contact washer).*

14. Connect up the clutch cable and adjust clutch clearance :
Clearance between the thrust bearing and toggles = 1 to 1.5 mm which gives a pedal free-movement of 20 to 25 mm.
Clip on the nylon protective cover.

15. Connect up :
- the choke cable (8),
- the accelerator cable (5),
- the petrol inlet pipe (2),
- the heater control cable (4).

(Check operation of flaps and adjust control if necessary).

16. Connect up :
- the starter positive supply lead,
- the alternator excitation lead and the idle cut-off lead (9).

17. Fit :
- the exhaust coupling clamps (3),
- the heater hoses (6) and the air release bellows (10),
- the spare wheel and coil support bar (7),
- the air filter.

18. Connect up the right headlamp positioning control cable :

a) Engage the cable (12) in the headlamp support.

c) Offer up the adjustment unit (11) and connect the cable (see photo).

c) Engage the unit (11) in the headlamp support and then turn and press until stud « a » engages.

19. Fit the crossmember anti-recirculation plate assembly :

a) Connect :
- the horn lead,
- the pressure switch lead (16),
- the connector (17).

b) Connect :
- the bonnet opening cable (14),
- the flexible hose (15) to the vacuum capsule (13).

20. Fit :
- the lower valance (19),
- the bumper,
- the shield,
- the headlamps.

21. Connect up :
- the battery cables,
- the earth lead (18) to the right headlamp support.

22. Fit the spare wheel.

23. Adjust the headlamps.

78-91

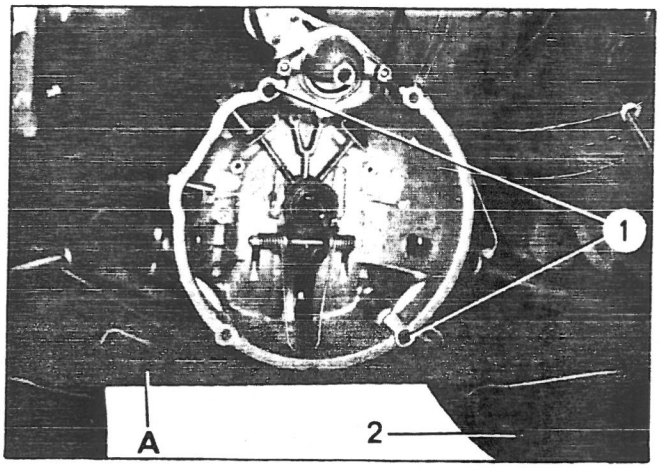

78-86

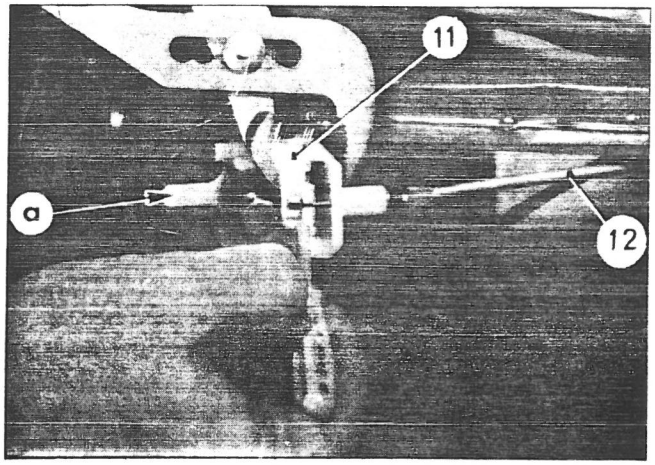

78-92

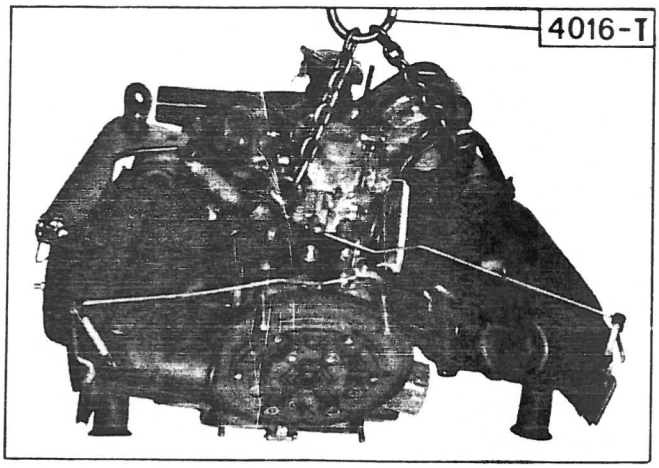

78-69

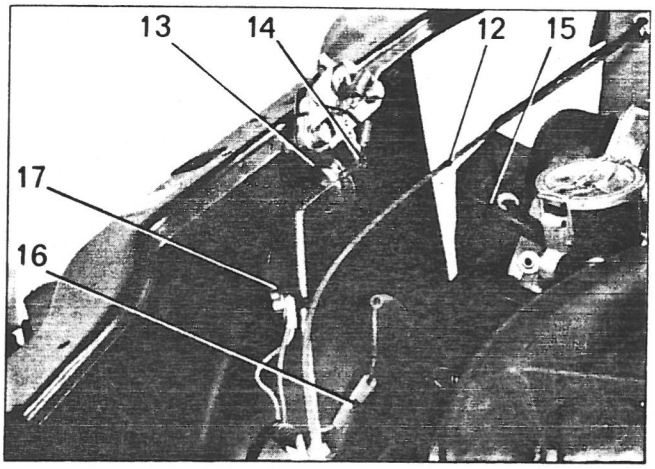

78-83

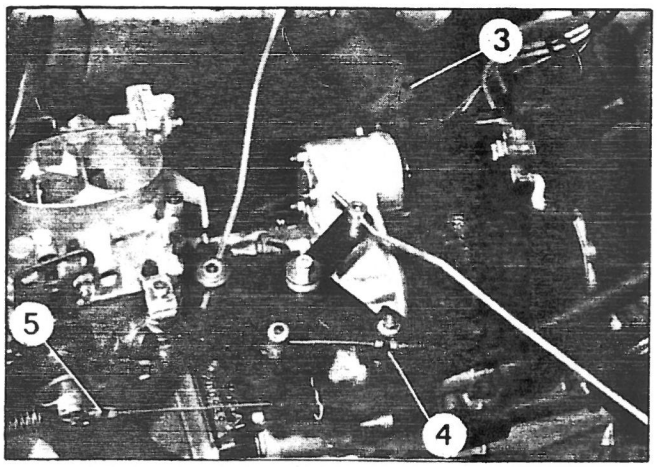

78-61

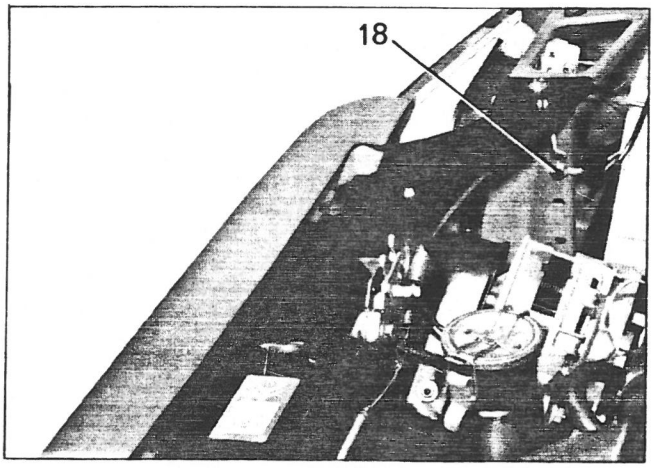

78-85

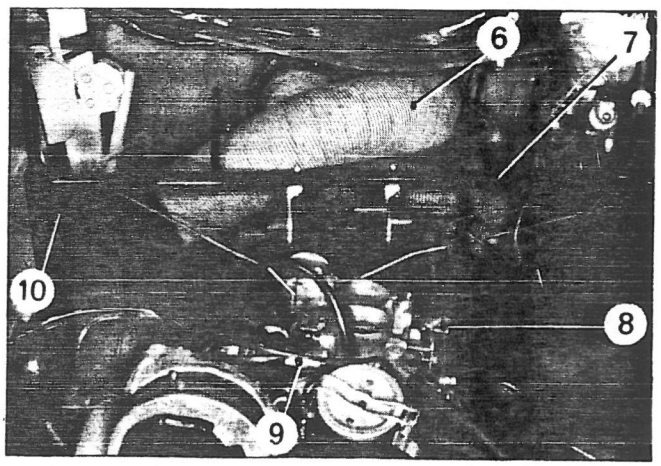

78-60

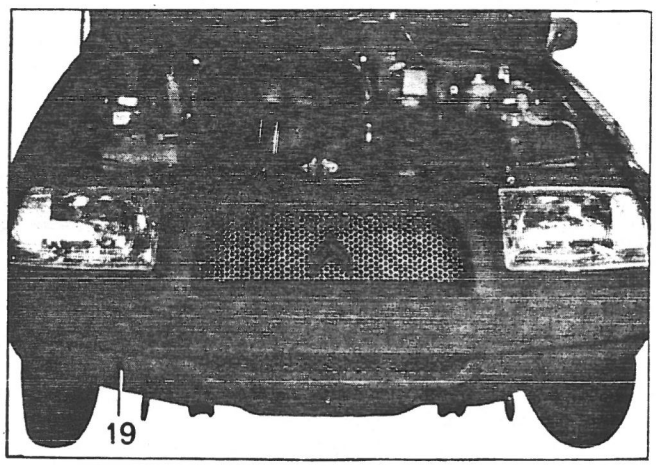

OPERATION
VD1. 225-1

REPLACEMENT OF AN OIL COOLER

813-1 (II)

SPECIAL TOOLING

TOOL SOLD

4038-T : Fan removal extractor

TOOL NOT SOLD

MR. 630-11/18 : Spanner for oil cooler union-nut

TIGHTENING TORQUES

Recommended tightening torques :

Tightening points	Torque in m.daN
Fan attachment bolt *(contact washer)*	5 to 6
Oil cooler attachment union-nut	1.6 to 1.8

78-128

4038 -T

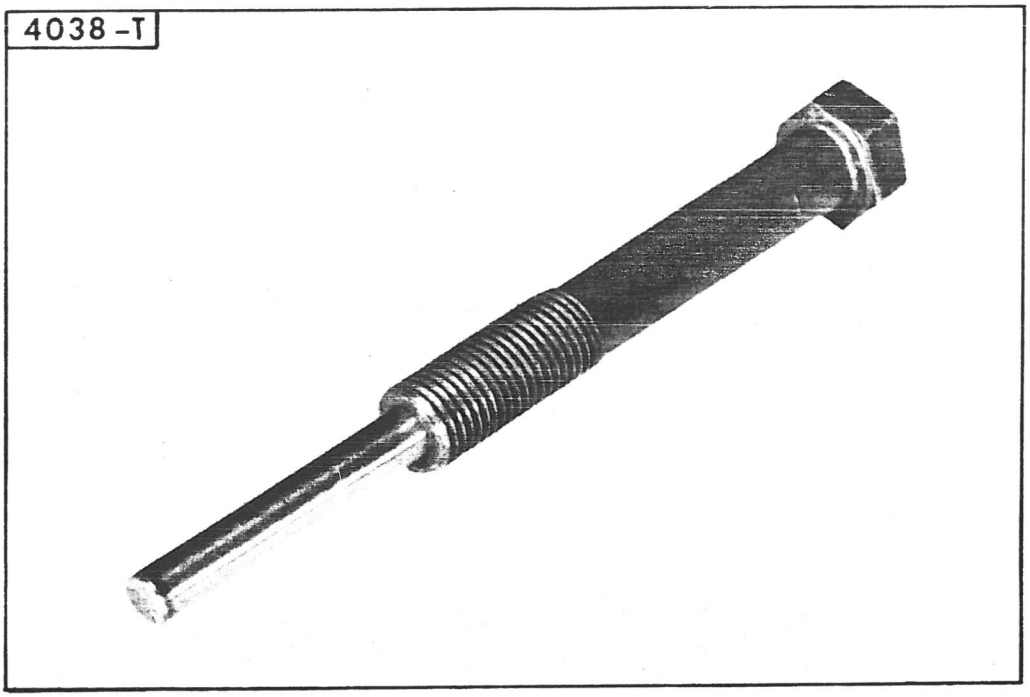

78 44

MR.630 - 11 / 18

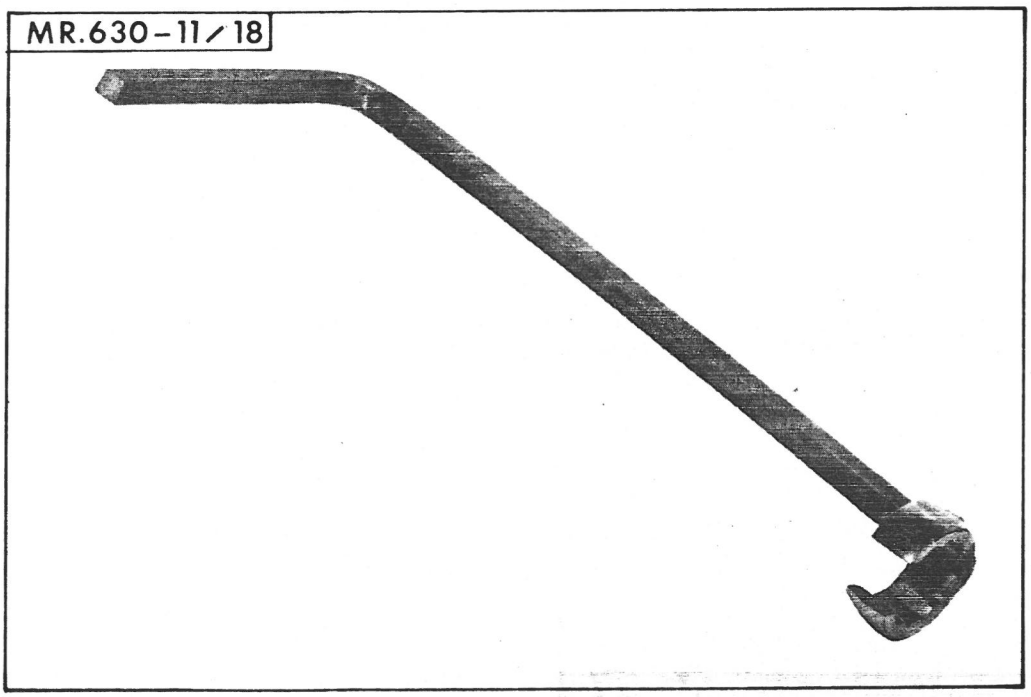

78-60

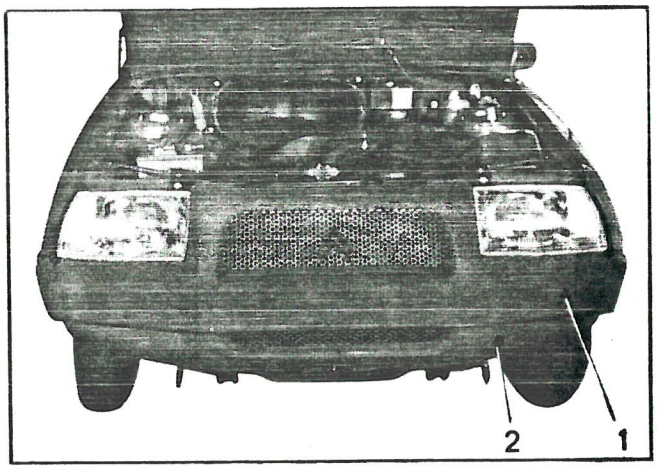

76-872

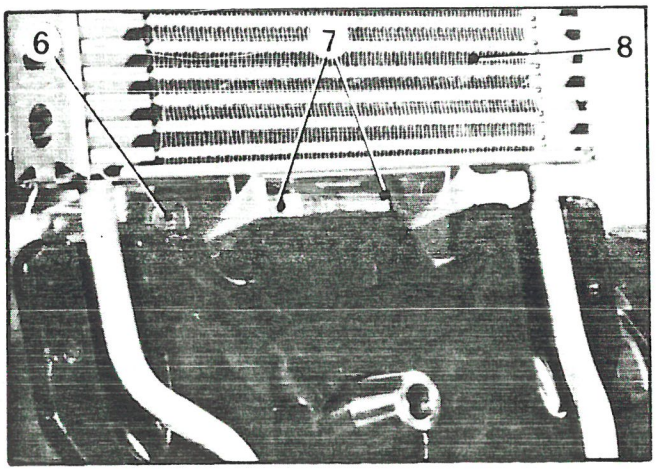

78-149

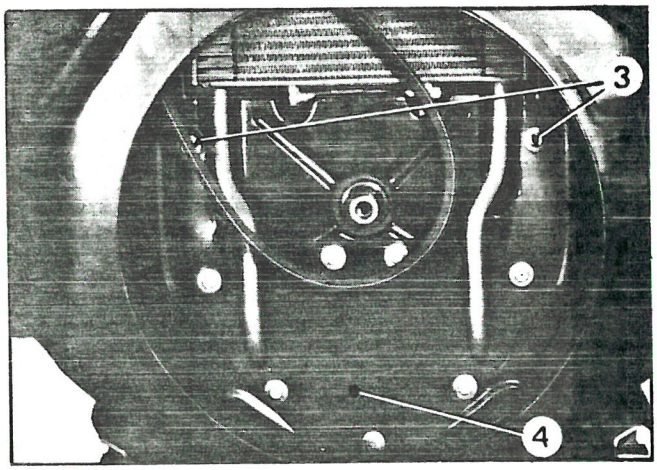

78-62

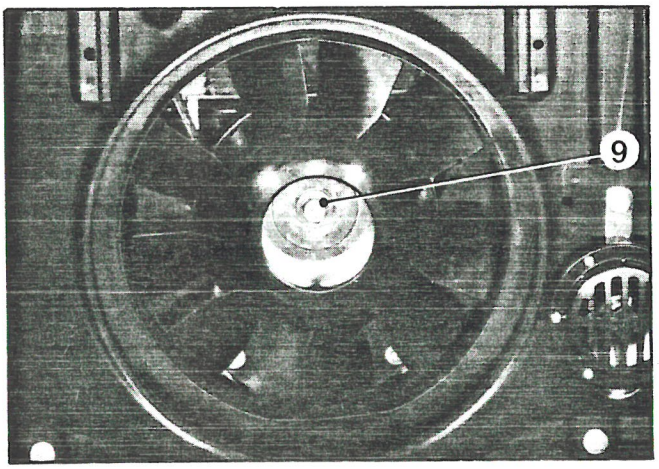

78-111

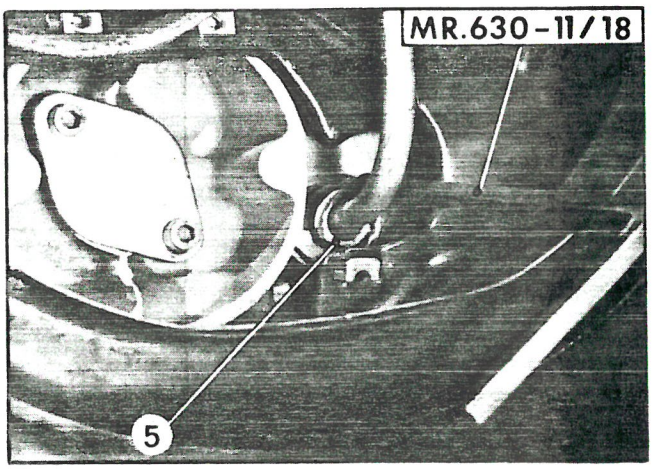

REPLACING AN OIL COOLER

REMOVAL

Never run the engine without the cooler.

1. To remove the fan :

a) Remove the shield (1) and lower valance (2)

b) Remove bolt (9).

c) Remove the fan : Use extractor 4038-T

2. To remove the cooler :

a) Remove the air manifold rubber sealing plate (4).

b) Remove the sealing plate bolts (3).

c) Remove the bolt fastening the oil cooler (6) onto the crankcase.

d) Unscrew the two pipe securing union-bolts (5) : spanner MR. 630-11/18

e) Remove the oil cooler (8).

FITTING

3. Offer up the oil cooler :

a) Fit a new pre-greased sleeve-seal on the end of each of the cooler pipes.

b) Fit the ends of the pipes into their housings in the crankcase.

c) Tighten the union-bolts to : **1.6 to 1.8 m.daN.**

4. Fit the spacers (7) between the crankcase and the oil cooler mounting lugs.
Fit and tighten bolt (6).

5. Fit the sealing plate bolts (3) and the air manifold rubber sealing plate.

6. To fit the fan :

a) Fit the fan and locate the belt on the pulley.

b) Tighten the fixing bolt (9) to : **5 to 6 m.daN** *(lugged contact washer).*

7. Check belt tension :

If necessary, tighten slightly.
(Check that the belt does not touch the oil cooler).

8. Fit the lower valance (2) and the shield (1).

9. Check and top up engine oil.

OPERATION
VD1. 343-4

WORKING ON THE GEARBOX

SPECIAL TOOLING

TOOL SOLD

4039-T : Mandrel for fitting the gearbox output seal

TIGHTENING TORQUES

Recommended tightening torques :

Tightening points	Torque in m.daN
Gearbox drive output mounting bolt *(copper washer)*	1.1
Gearbox drive output transmission coupling bolts *(spring washer)*	2.8
Gearbox to rubber mounting attachment nut *(serrated washer and flat washer)*	6 to 6.5
Rubber mounting to crossmember coupling bolt *(lugged contact washer)*	2 to 2.8
Bracket to gearbox mounting bolt *(lugged contact washer)*	2.1 to 2.8

78-129

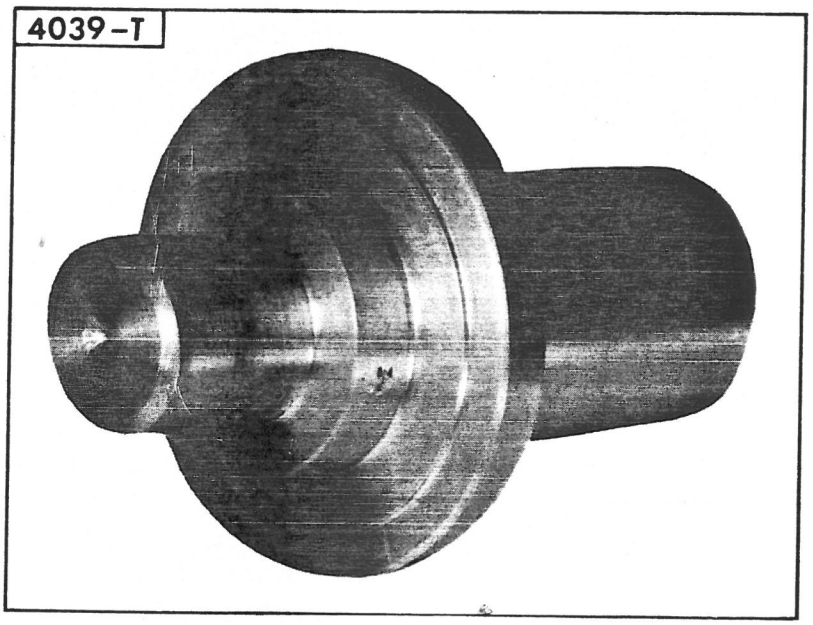

78-105

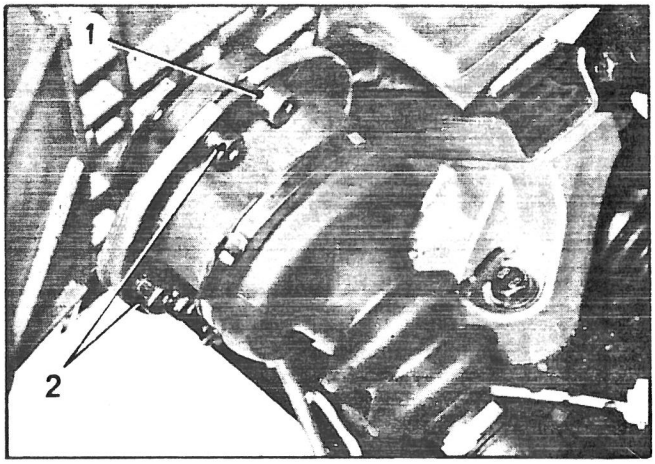

78-80

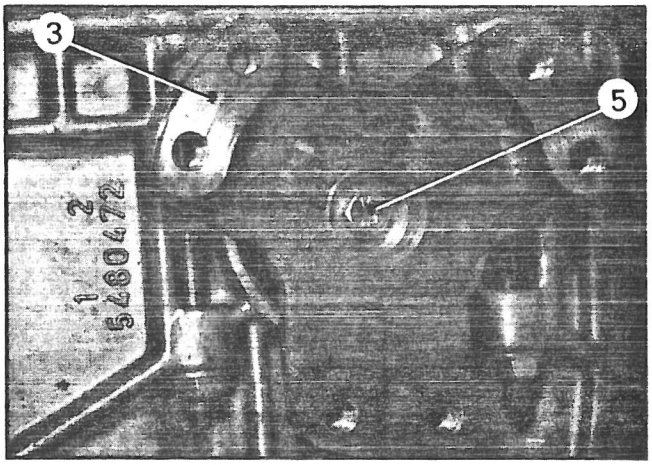

78-82

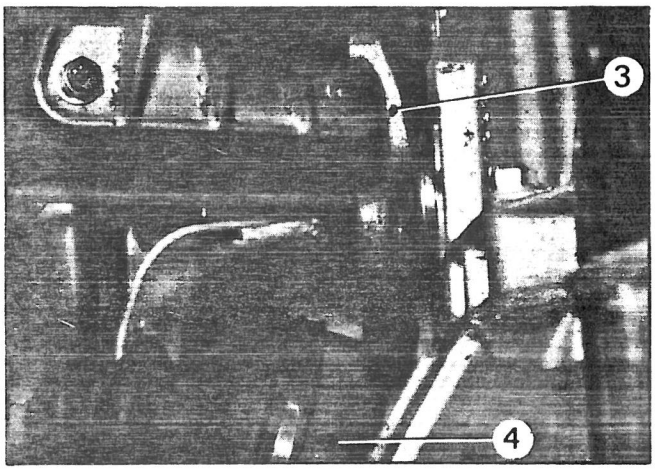

78-81

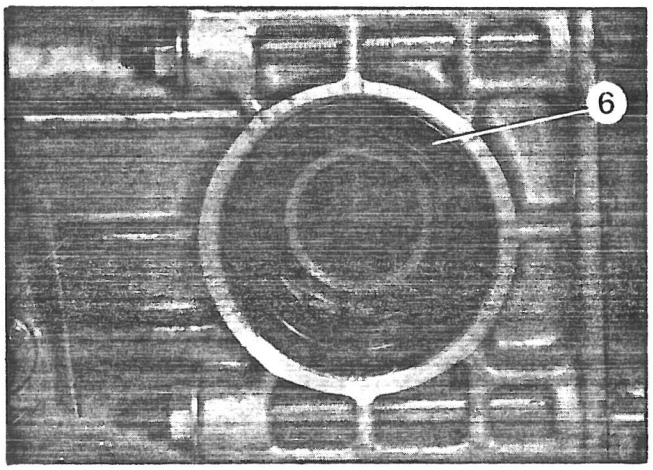

I. REMOVING AND FITTING A GEARBOX DRIVE OUTLET SHAFT OR A SEAL

REMOVAL

1. Disconnect the drive shaft, bolts (2) and recover the spring washers (1).

2. Disengage the drive shaft (4) sideways.

3. To remove the gearbox outlet shaft :

- Remove the bolt (5).
- Extract the gearbox outlet shaft (3).

4. Remove the sealing ring (6).

FITTING

5. Fit the *new* seal (6). Use mandrel **4039-T**

6. Fit the gearbox outlet shaft.

Tighten bolt (5) : **1.1 m.daN.**

7. Couple up the drive shaft, tighten bolts (2) to **2.8 m.daN** *(new spring washers).*

8. Check gearbox oil level.

II. REMOVING AND FITTING RUBBER GEARBOX MOUNTINGS

REMOVAL

There are several manufacturers of rubber support mountings and mixing is forbidden. In case of replacement, both mountings must be changed *(one after the other)*.

2. Remove :
- the spare wheel,
- the heater hoses.

2. To remove the rubber mounting :

a) Remove attachment nut (3) from the rubber mounting on bracket (2).

b) Remove the mounting bolts (6) from the rubber block support bracket (5) on the crossmember.

c) Support the gearbox and remove the rubber mouting and its support bracket (5).

d) Remove the mounting (7) from its support bracket and travel guide (4).

FITTING

3. Fit the rubber mounting on the travel guide (4) and fit it on support bracket (5).
Nut tightening torque (8) : **1.5 m.daN.**

4. Support the gearbox, position the rubber mounting assembly, and tighten bolts (6) to : **2 to 2.8 m.daN.**

5. Fit and tighten nut (3) to : **6 to 6.5 m.daN.**

If on removing, stud (1) has remained attached to the nut (3), refit positionning the fork (9) **with the back facing the rear** and the narrowest lug facing downwards.

6. Fit :
- the heat hoses,
- the spare wheel.

NOTE : If the support bracket is changed (2), tighten bolts (10) to : **2.1 to 2.8 m.daN.**

78-82

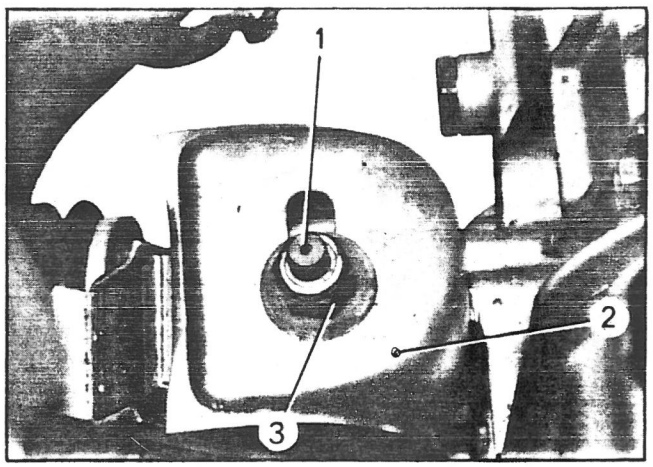

78-160

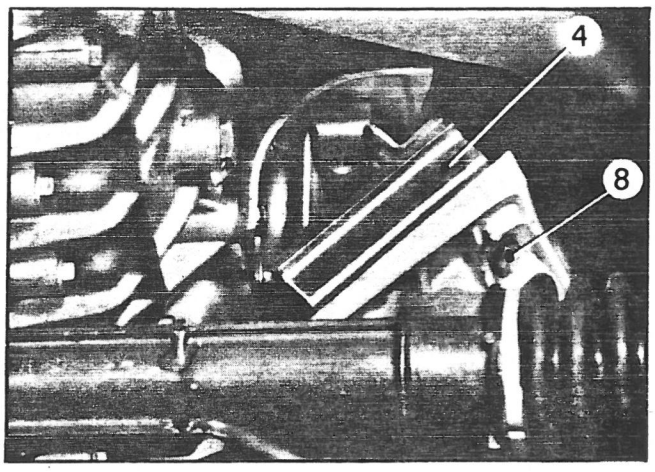

78-105

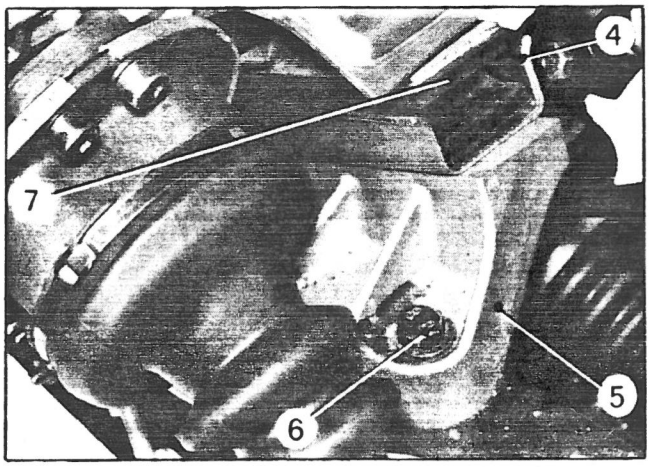

78-158

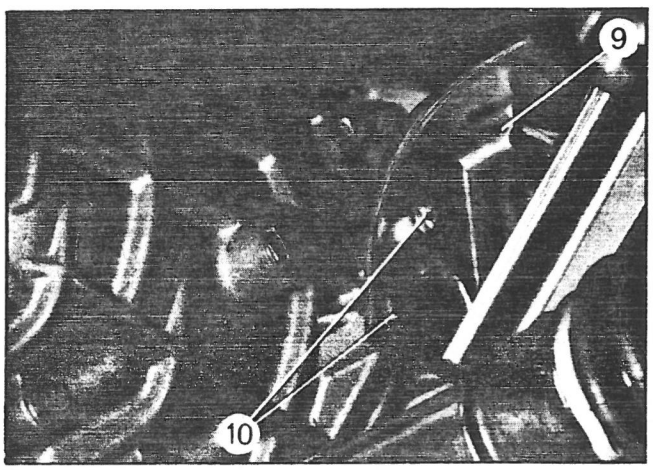

OPERATION
VD1. 416-1

REMOVING AND FITTING A FRONT HUB

813-1 (II)

SPECIAL TOOLING

TOOLS SOLD

1892-T bis : Ball-joint extractor
4028-T : Suspension compression tool
6310-T : Hub locking tool

TIGHTENING TORQUES

Compulsory tightening torques *(torque wrench)* **:**

Tightening point	Torque in m.daN
Damper upper mounting Nylstop nuts	0.75 to 1.25
Link rod ball-joint Nylstop collar nut	3 to 4
Brake caliper mounting bolt (LOCTITE FRENETANCH)	8 to 9
Anti-roll ball bearing bolt (spring washer)	12.2 to 13.5
Suspension arm swivel Nylstop nut	4 to 5
Anti-roll bar Nylstop nut	6 to 7
Lower swivel ball joint Nylstop nut	3 to 4
Drive shaft to swivel attachment nut *(peen to lock)*	23 to 26
Drive shaft to gearbox drive outlet mounting bolt *(spring washer)*	2.8
Damper to swivel Nylstop mounting nut	6 to 8

13549

1892-T.bis

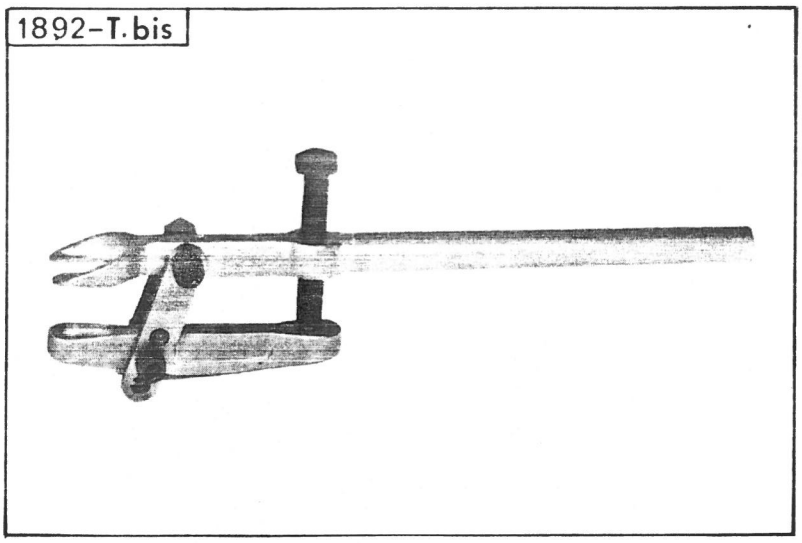

78.208

4028-T

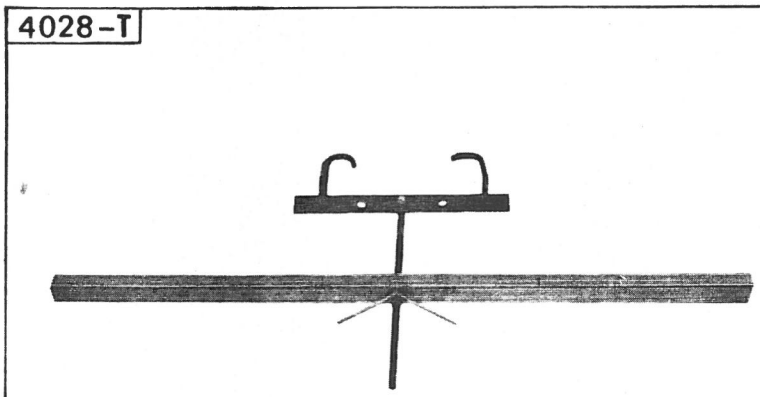

13723

6310-T

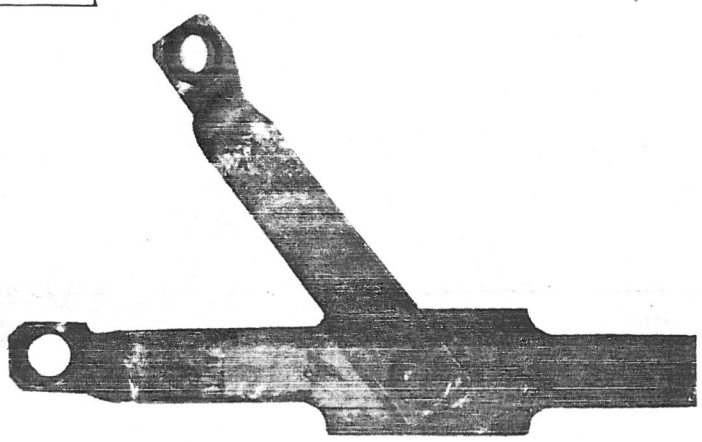

78-163

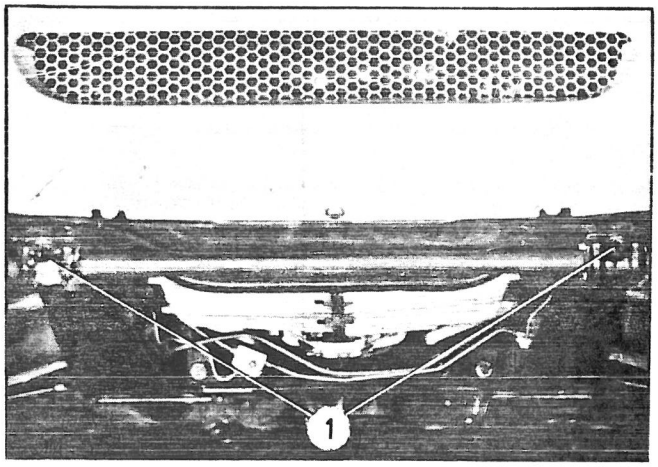

78-171

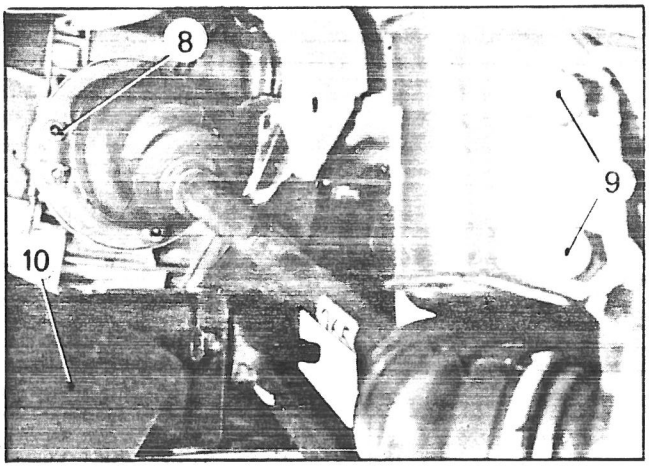

78-162

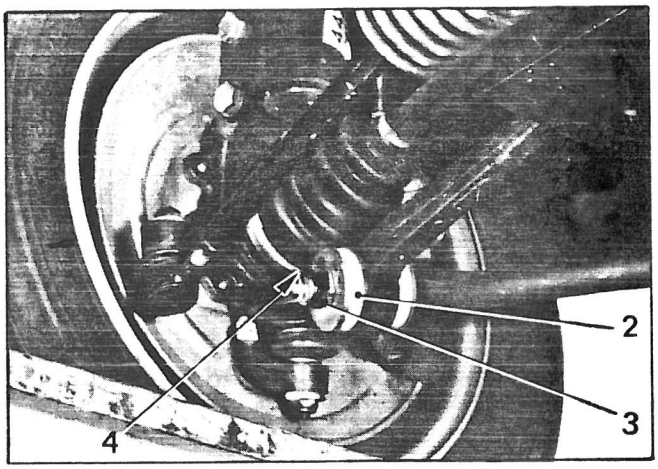

78-165

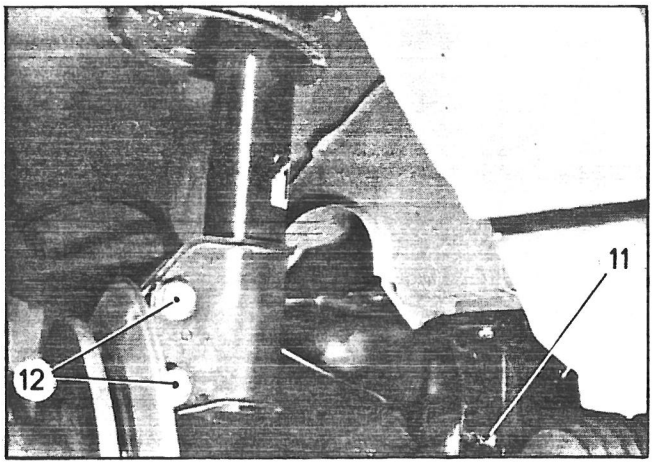

78-167

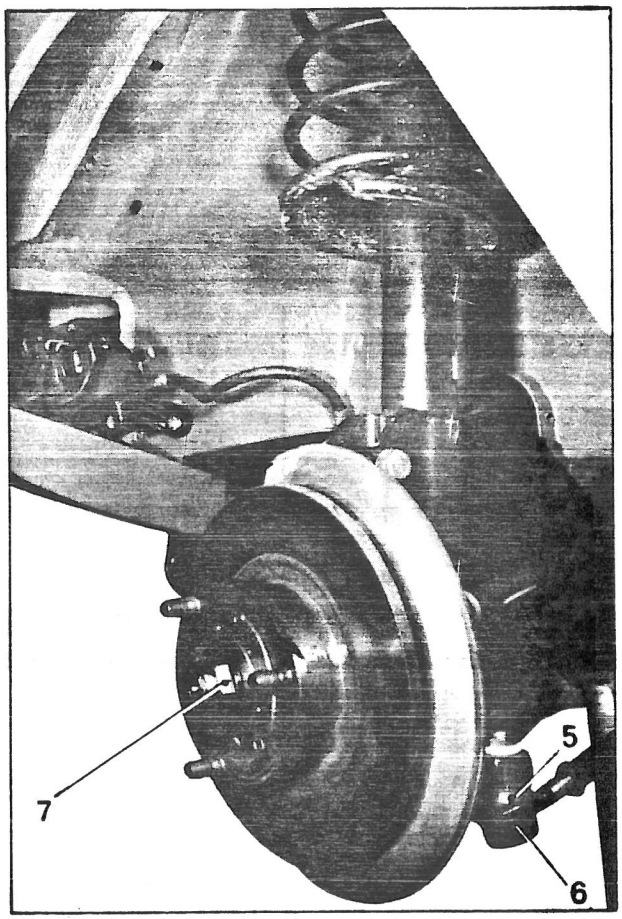

78-168

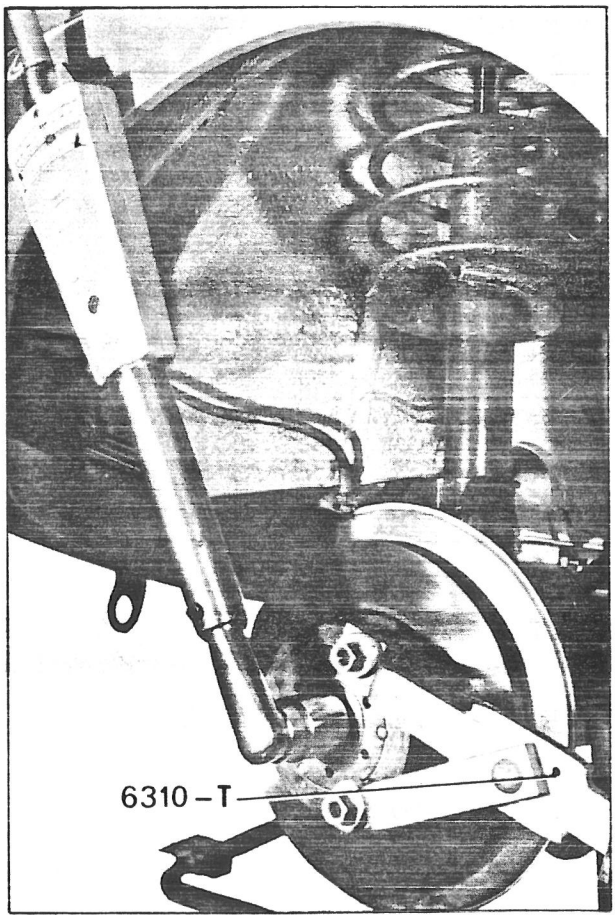

REMOVING AND FITTING A FRONT HUB

REMOVAL

This operation is to be carried out on a car lift or over a pit.

1. Disconnect the anti-roll bar bearings (1) from front subframe.

On the removal side :

2. Slacken the wheel bolts.

3. Remove :
- the split pin (4),
- the Nylstop nut (3),
- the washer and mounting pad (2).

4. Remove the anti-roll bar.

5. Support the vehicle under the front subframe, with the front wheels hanging free and remove the wheel.

6. Disconnect the track rod ball joint (6).
(Extractor **1892-T bis**).

Take care not to damage the ball-joint rubber protector (5).

7. Remove and suspend **the brake caliper without opening the hydraulic circuit** *(on the « BENDIX » brake caliper, insert a piece of rubber pipe between the pads to prevent them from falling out).*

8. Remove the drive-shaft :

a) Loosen and remove nut (7), hold hub in place using tool **6310-T.**
b) Unclip mudflap (10) and remove the gearbox output shaft attachment bolts (8).
c) Remove the drive-shaft.

9. Remove nut (11) and swivel bolt.

10. Remove the damper lower mounting nuts (9) and bolts (12) and remove the hub.

FITTING

11. Offer up the hub to the damper mounting, insert the bolts (12) **head towards the rear of the vehicle** and tighten the *new* Nylstop nuts (9) to a torque of **6 to 8 m.daN.** Fit the swivel bolt and a *new* Nylstop nut (11) **without tightening.**

12. To fit the drive-shaft :

a) Engage the drive-shaft in the hub splines.
b) Fit bolts (8), tighten to **2.8 m.daN** *(new spring washer).*
c) Fit nut (7), *new (lock the hub using tool* **6310-T)** **Tightening torque : 23 to 26 m.daN** *(torque wrench).*

Lock nut (7) using a round ended tool.

d) Pin on the flap (10).

13. Check that the ball joint (1) protector is in perfect condition and connect the steering link rod (ball joint cone de-greased and new Nylstop nut).
Tightening torque : 3 to 4 m.daN *(torque wrench)*

14. Degrease both sides of the disc.
Fit the caliper.
(BENDIX caliper : remove the blocking spacer from between the pads).
Coat **the two bolts (➔) with LOCTITE FRENETANCH and tighten to : 8 to 9 m.daN.**
(torque wrench).

15. To fit the wheel.
Lower the vehicle onto its wheels and push it to and fro to obtain its normal position.
Compress the suspension until the suspension arms are in line with the front subframe (tool **4028-T**). Put on the handbrake and push the wheel as far as possible to the rear of the vehicle and wedge in this position.

16. To connect the anti-roll bar :
Engage the anti-roll bar and insert :
- washer (2),
- the washer and mounting pad (3),

Mounting pads should be **pre-impregnated with** ESSO TEROSSO 12 or SHELL TELLUS 75 **oil.**

- the pad (4) and washer,
- the *new* Nylstop nut (7) without tightening it.

17. Grease bearings (9). *(KLUBER grease, R.P. ref. : 79.01-973-067).*
Tighten the bearing mounting bolts *(spring washer)* **to 12.2 to 13.5 m.daN** *(torque wrench).*

18. Tighten :
- **the swivel pin nut (10) to : 4 to 5 m.daN,**
- **the anti-roll bar nut (7) to : 6 to 7 m.daN** *(torque wrench).*

Fit the split pin (8).

19. Release the suspension and check tightening of wheel nuts.

NOTE : If removal requires disengagement of the ball joint (6), **check the condition of the rubber protector (5).**
Fit a *new* Nysltop nut.
Tightening torque : 3 to 4 m.daN *(torque wrench)*

78-167

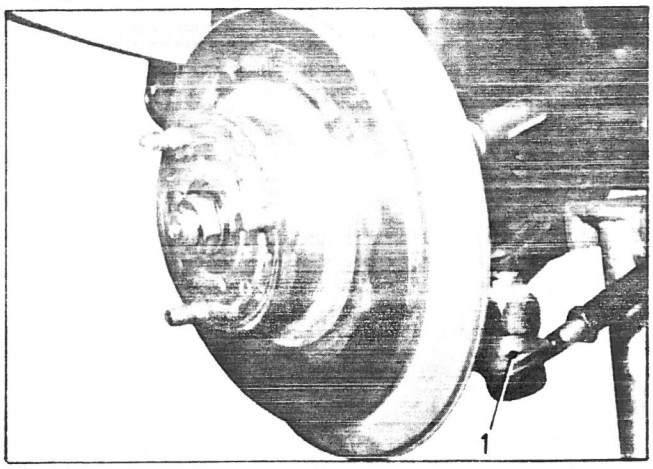

78-162

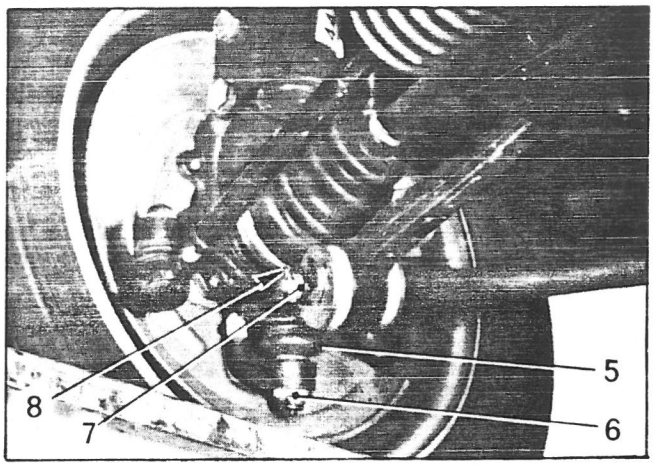

78-170

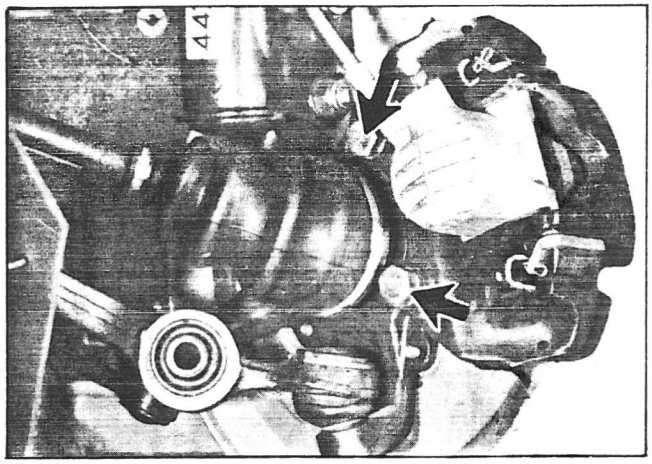

78-163

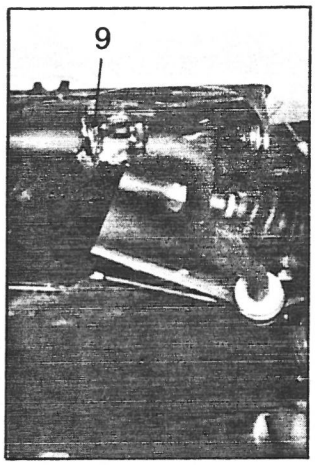

78-171

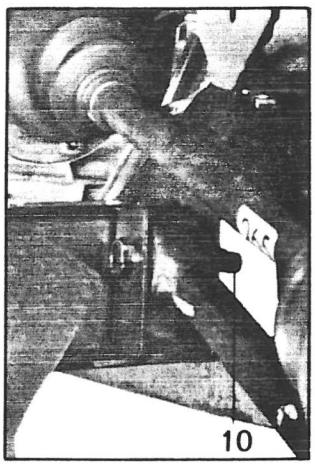

78-205

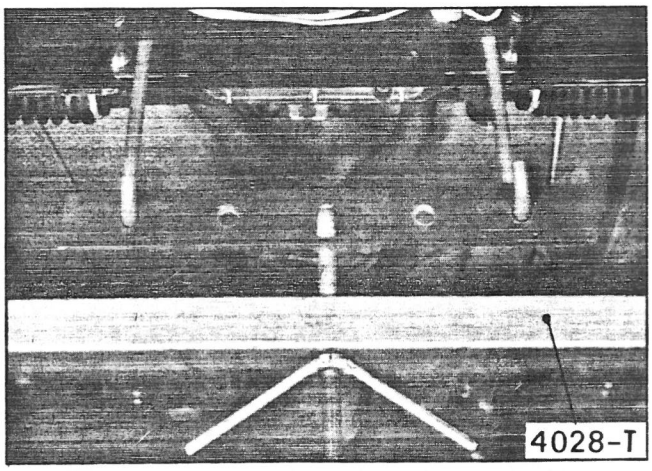

78-161

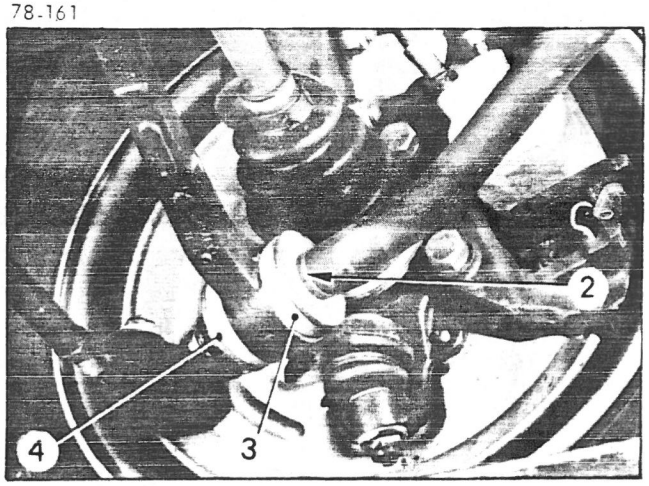

OPERATION
VD1. 422-1

REMOVING AND FITTING A REAR WHEELARM

SPECIAL TOOLING

TOOLS SOLD

8.1509-T : Rear lifting crossmember

4028-T : Suspension compression tool

2305-T : Shell clearance gauge

Kit 8.0908-T tool K : Spanner for rear arm nuts

TIGHTENING TORQUES

Recommended tightening torques :

Tightening point	Torque in m.daN
Side support mounting Nylstop nuts *(flat washer)*	4 to 5
Arm swivel pin Nylstop nuts	7 to 8
Central support mounting bolts *(serrated washer)*	4 to 5
Damper yoke nut	3 to 4
Damper yoke nut locking bolt	3.5 to 4
Seat belt mounting bolts	3

76-656

8.1509-T

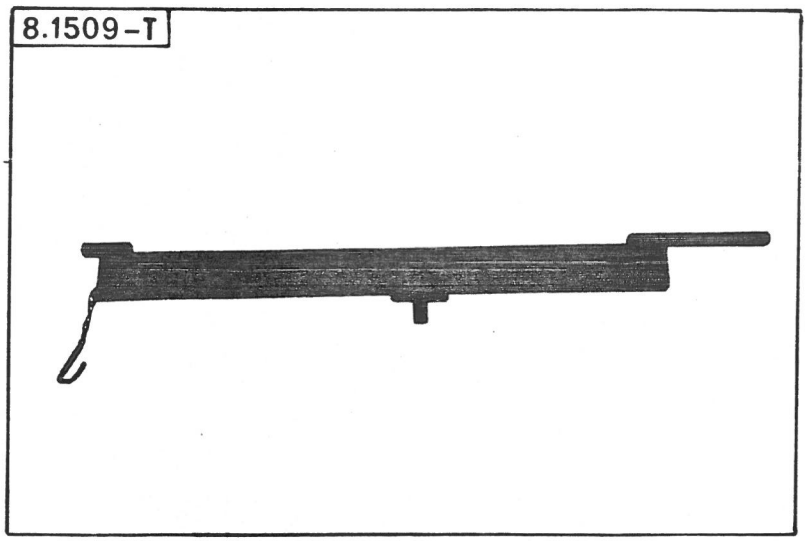

78-208

4028-T

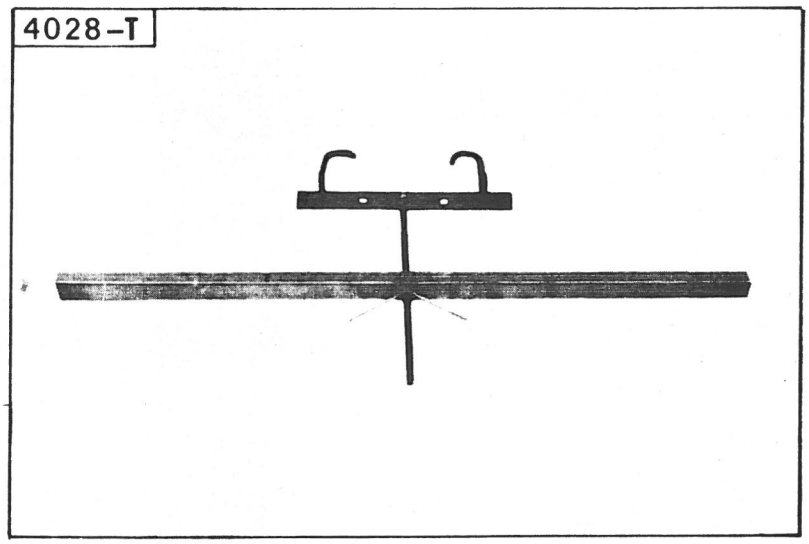

76-708

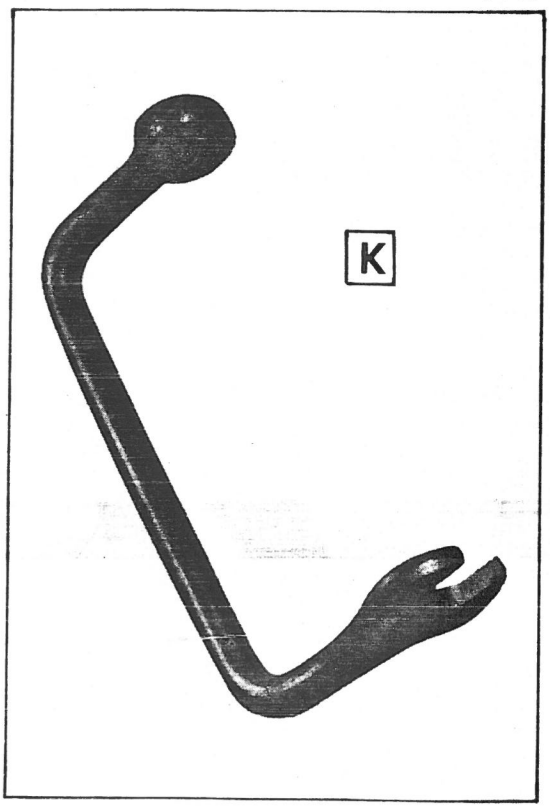

76-655

2305-T

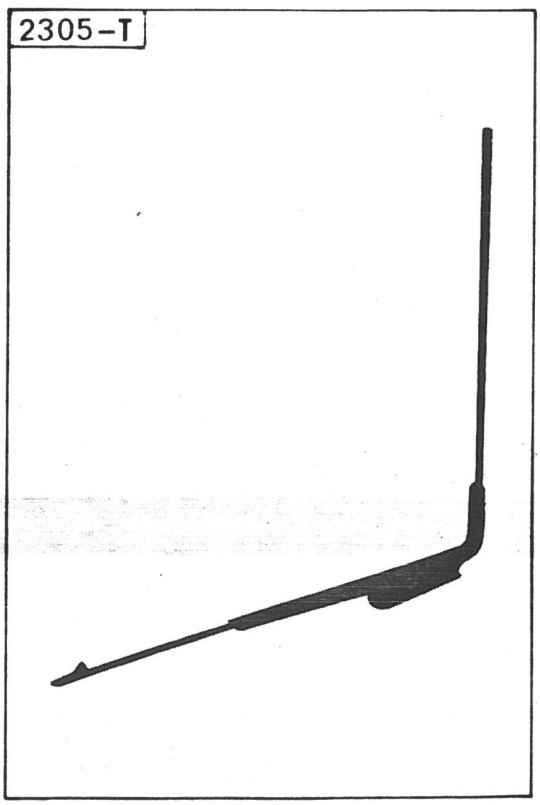

813-1 (II)

78-596

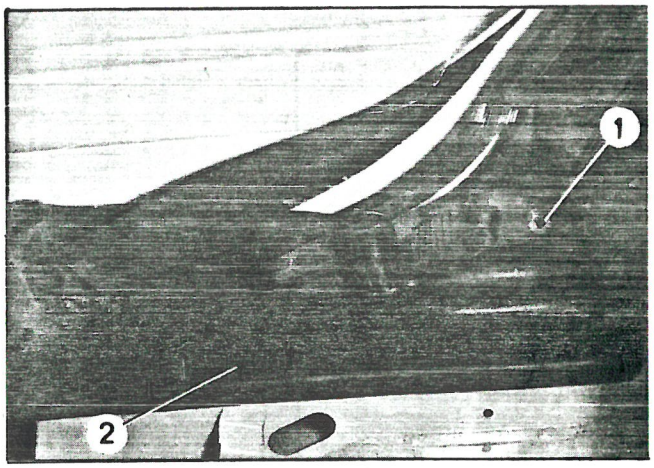

76-574

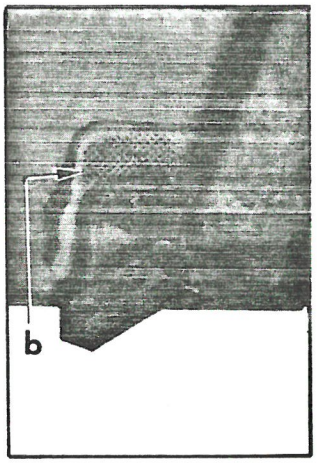

76-575

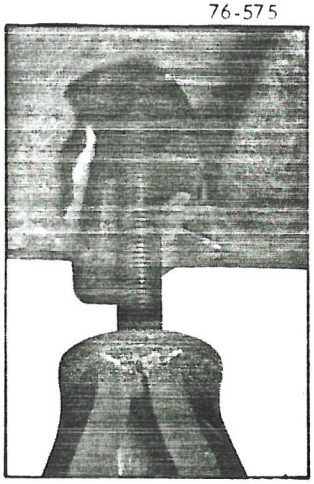

78-595

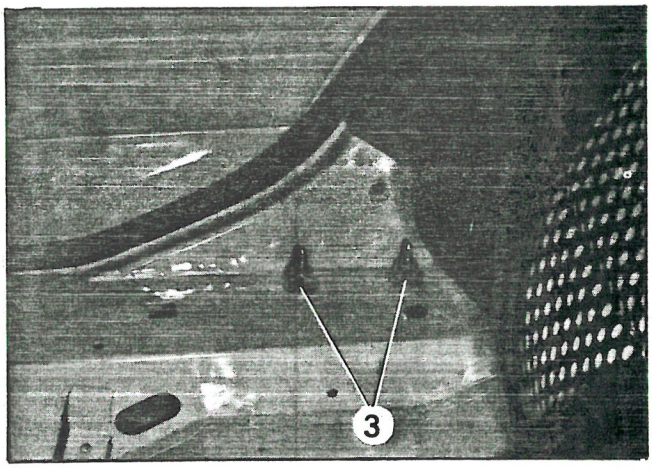

76-572

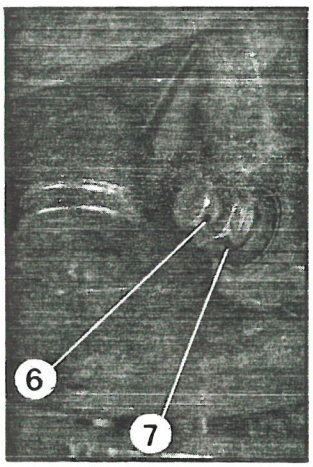

76-573

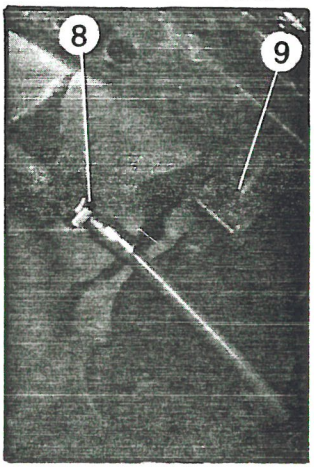

78-594

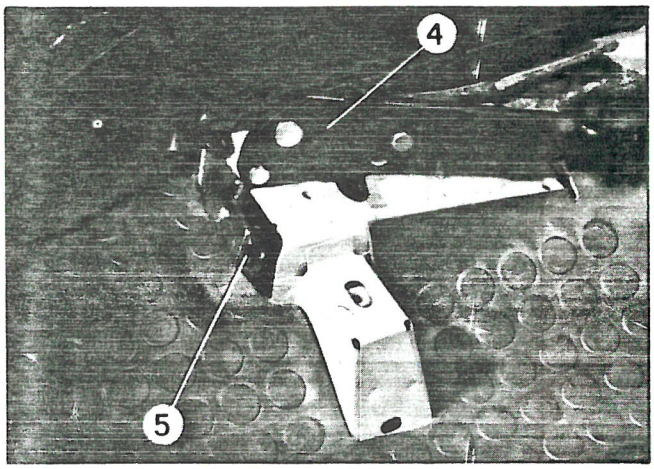

76-587

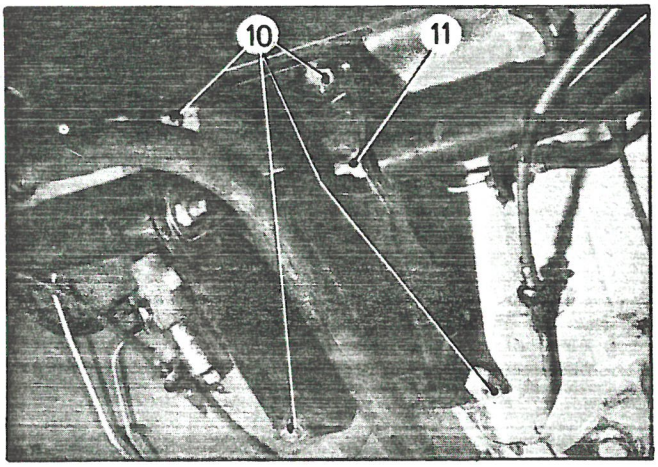

78-475

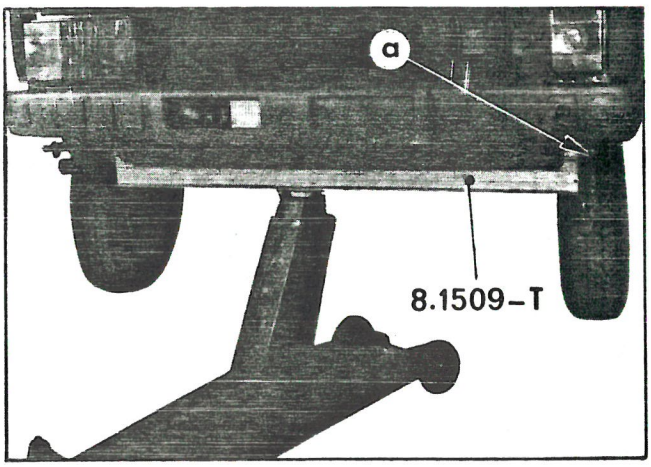

76-580

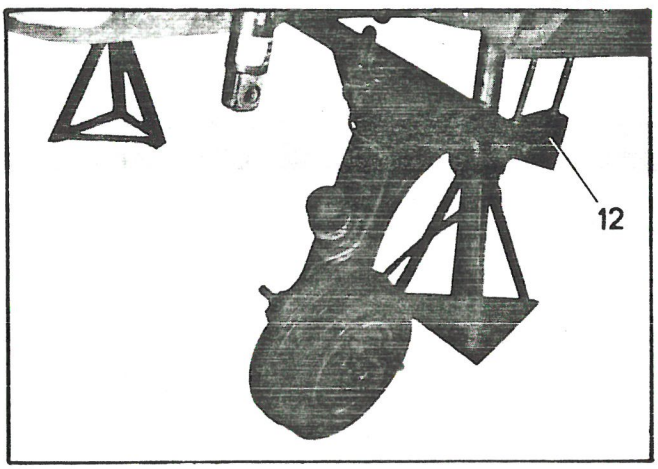

REMOVING AND FITTING A REAR WHEELARM

REMOVAL.

1. Remove :
- the front right hand seat with its runner,
- the seat belt mounting bolts (1),
- the plastic covers (2),
- nuts (3) *(on the removal side)* and slacken the nuts *on the opposite side* **but do not remove.**

2. Remove the handbrake lever (4) to release cable (5) *(removal side)*.

3. To jack up the rear of the vehicle :

Engage crossmember 8.1509-T in the anchoring lugs.
No other lifting point should be used.
Pin the crossmember at « a ».

4. Position the stands under side stiffeners « b ».
No other support points are to be used.

5. On the removal side :
Remove :
- the wheel,
- the locking bolt (6), the nut (7) and disengage the damper,
- nut (11) and on each arm, slacken off the other pivot pin bolt nuts.

Extract the handbrake cable (8).
Uncouple the brake hose and blank off the pipe (9).

6. Remove the central support mounting bolts (10).

7. Release the lateral support (12) and remove the wheel arm.

FITTING

8. Engage the wheel arm into its mountings, put on the *new* Nylstop nuts (3) on the lateral support *(flat washer)*.
Tighten each side to : **4 to 5 m.daN.**

9. Put on the new Nylstop nut (1) but do not tighten.
Provisionally tighten the central support bolts (2).

10. Connect up the suspension system to the arm (use flat washers (3)).
Tighten nut (4) home but do not lock.

11. Connect up the brake hose (6).
Thread the handbrake cable (7) into its hose (5).
Hook the cable (9) onto the compensator and fit the handbrake lever (8).

12. Fit the wheel and lift the vehicle on a car hoist or over a pit.

13. Using tool [4028-T] , compress the suspension to obtain dimension **« h » of 194 mm.**

14. Tighten :
- *On both sides :* the pivot pin nuts (1) to : **7 to 8 m.daN** using spanner [K]
- the damper yoke nut (4) to : **3.5 to 4 m.daN.**
- the stop screw (10) to : **3.5 to 4 m.daN.**

15. Release the suspension.

16. Adjust rear wheel alignment.
(See Op. VD1. 420-0).

After setting, tighten the two central support bolts (2) to : **4 to 5 m.daN.**

17. Bleed the rear brakes.

18. Adjust the handbrake cable *(if necessary).*

19. Fit :
- the plastic covers (12),
- the seat belts,
  Tighten bolts (11) to **3 m.daN.**
- the right hand front seat.

76-587

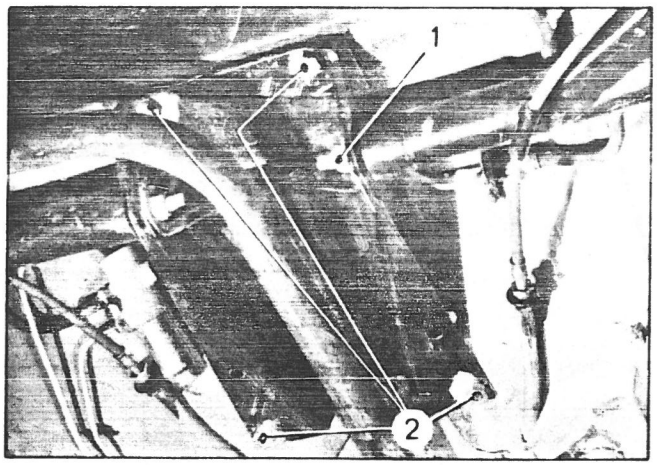

76-573

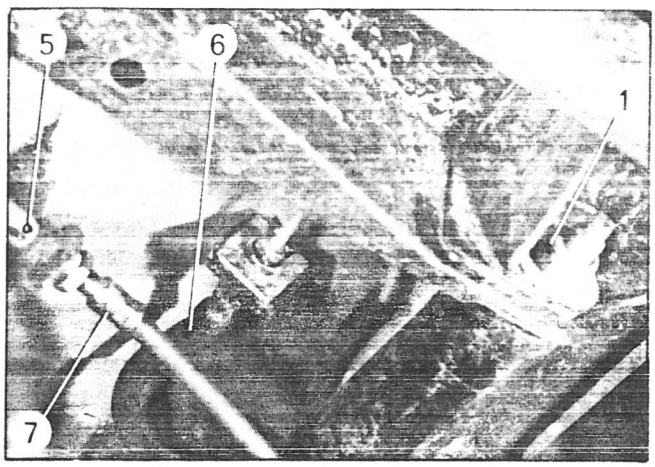

76-584

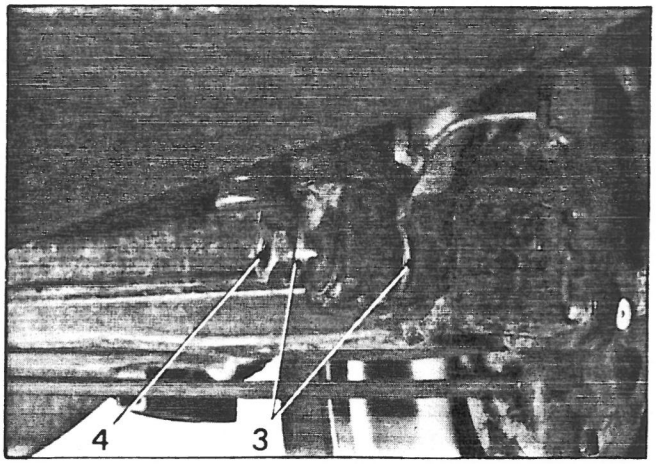

78-594

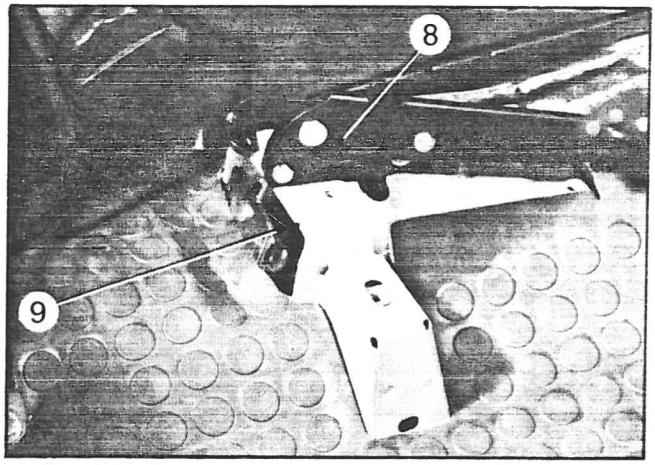

78-597

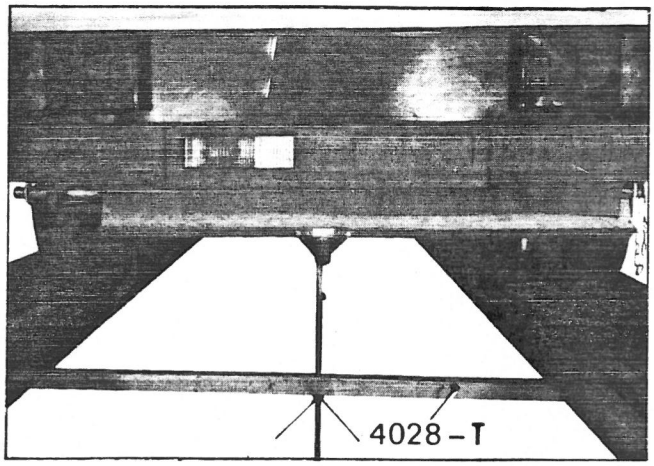

76-572

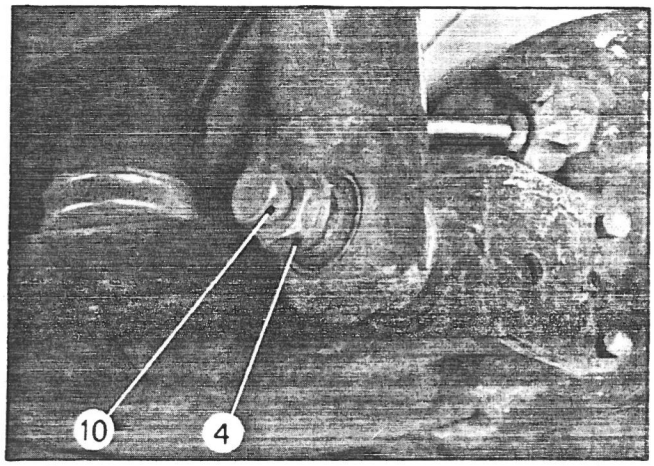

78-596

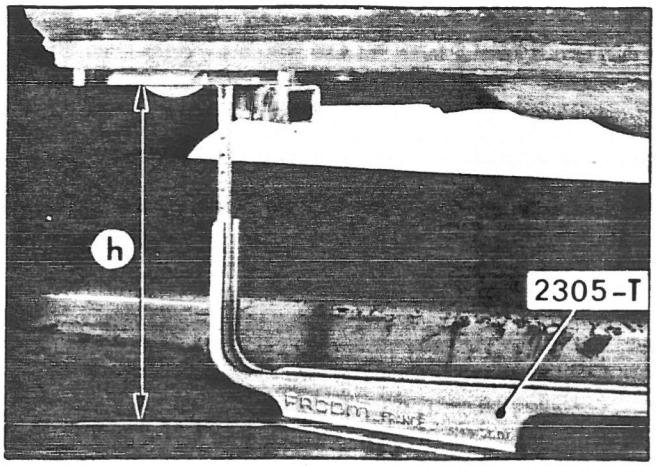

76-583

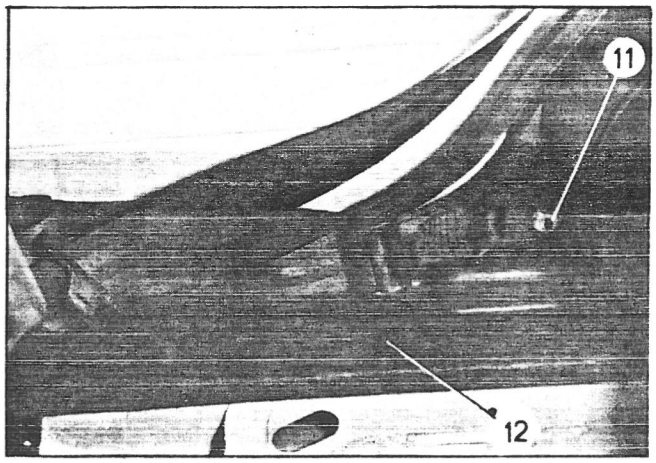

OPERATION
VD1. 442-1

REMOVING AND FITTING A STEERING SYSTEM

SPECIAL TOOLING

TOOLS SOLD

1892-T bis : Ball joint extractor

TIGHTENING TORQUES

Recommended tightening torques :

Tightening point	Torque in m.daN
Steering box mounting bolts	3 to 4
Link rod ball-joint Nylstop nut	3 to 4
Link rod to rack mounting	3.6 to 4
Universal joint coupling bolt	1.25 to 1.75
Alignment adjusting lock-nut	4 to 5

13549

1892-T-bis

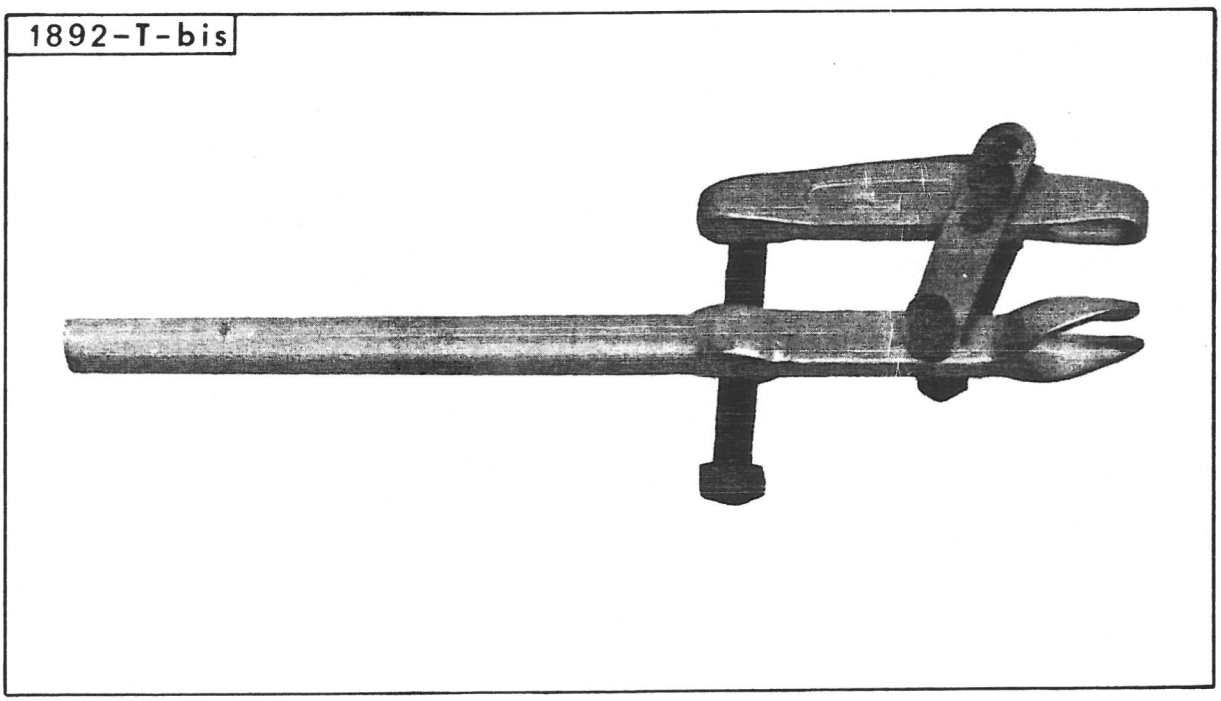

78-162

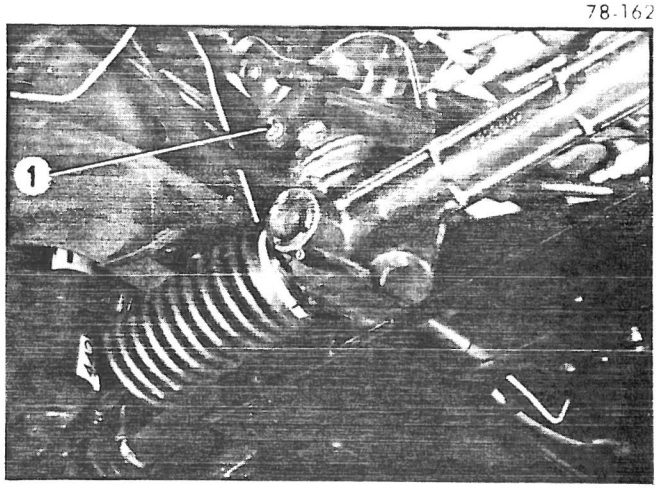

78-164

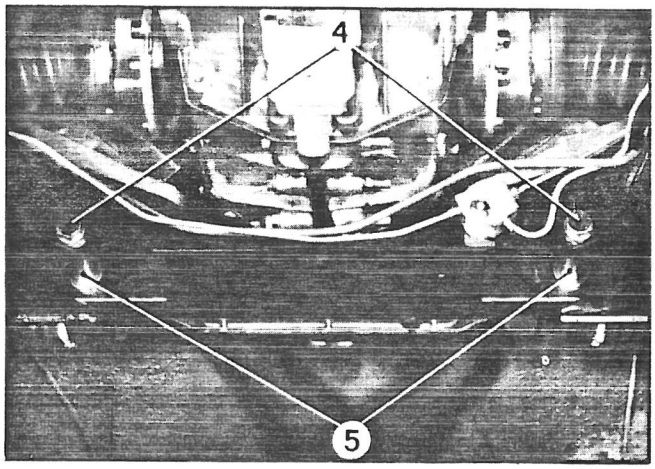

78-161

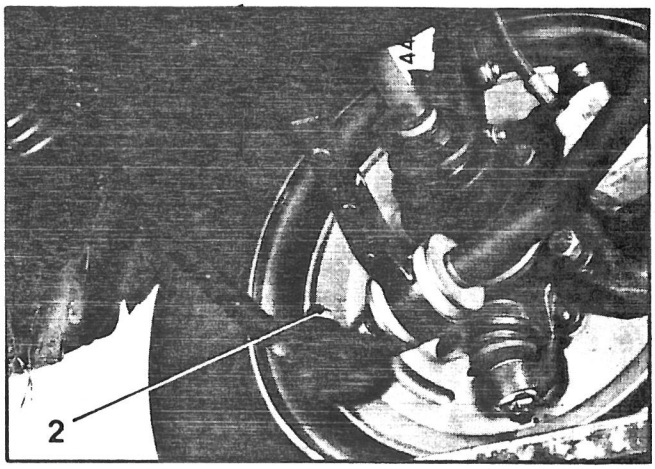

78-525

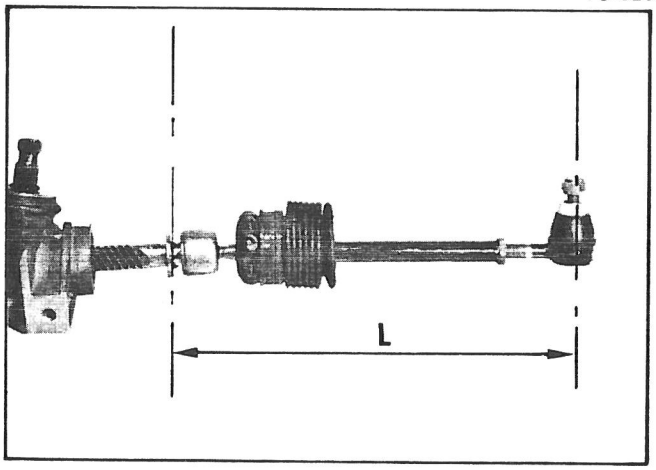

76-607

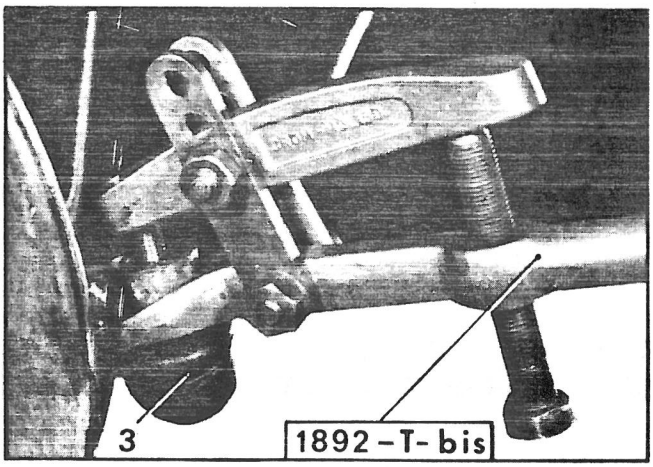

V 44-4

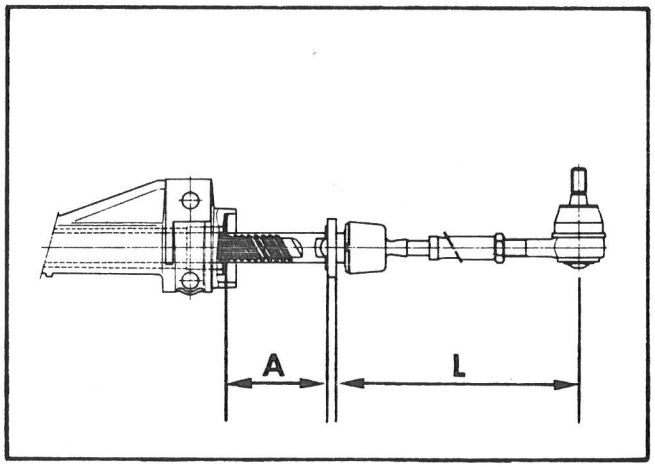

REMOVING AND FITTING A STEERING SYSTEM

REMOVAL

1. Remove :
- the universal joint bolt (1),
- the link rod ball-joint Nylstop nuts (2).

2. Disconnect the link rod ball joints (3), from the pins : extractor **1892-T bis**

Ensure that the extractor is correctly positioned in order to prevent damaging the ball-joint protective rubber.

3. Remove the two mounting bolts (4) and the washers (recover the spacers (5)).

4. Disconnect the steering system.

NOTE : When changing the link rod use :
« L » = 304.5 mm as an approximate alignment pre-setting.

FITTING

Set the steering with A = 67 mm to obtain the straight line position.

5. Offer up the steering system by engaging the rack and pinion splines into the steering shaft Universal joint, with the steering wheel spoke facing downwards.

6. Fit spacers (5), bolts (4), (flat washer under bolt head) **and tighten to 3 to 4 m.daN (new Nylstop nuts).**

7. Tighten the universal joint bolt (1) **(new Nylstop nut) to : 1.25 to 1.75 m.daN.**

8. Couple up the link rods to the swivels *(ball joint cones de-greased)* **(new Nylstop nuts (2), torque 3 to 4 m.daN.**

9. Adjust wheel alignment.
(See Operation : VD1. 410-0).

LIST OF VD2 OPERATIONS IN SECTION II

Operation number	DESCRIPTION
VD2. 100-1	Removing and fitting an engine-gearbox unit
VD2. 372-1	Removing and fitting a drive-shaft
VD2. 416-1	Removing and fitting a front hub
VD2. 422-1	Removing and fitting a rear wheelarm
VD2. 442-1	Removing and fitting a steering system

OPERATION
VD2. 100-1

REMOVING AND FITTING AN ENGINE-GEARBOX UNIT

SPECIAL TOOLING

TOOLS SOLD

2517-T bis : Sling

8.0313 L : Mandrel

TIGHTENING TORQUES

Tightening point	Torque in m.daN
Engine and gearbox unit bearing mounting nuts, left hand side of unit	4.5 to 5
Engine and gearbox bearing mounting nut, right hand side of unit	2 to 2.5
Oil circuit drain plug (new seal)	2.5 to 3
Cylinder block cooling circuit drain plug	3 to 4.5
Exhaust flange nuts	1.25 to 1.75

13 555

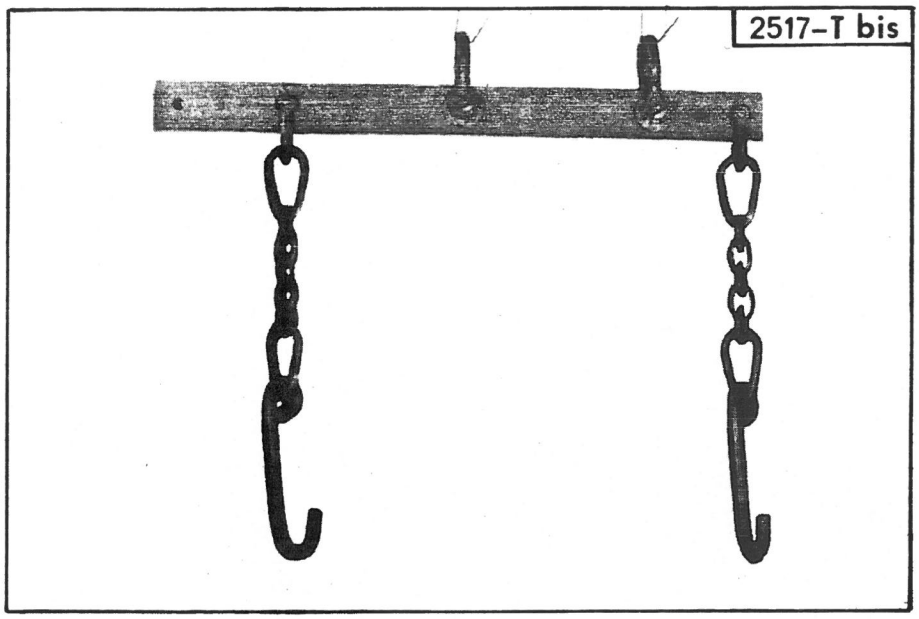

78-359

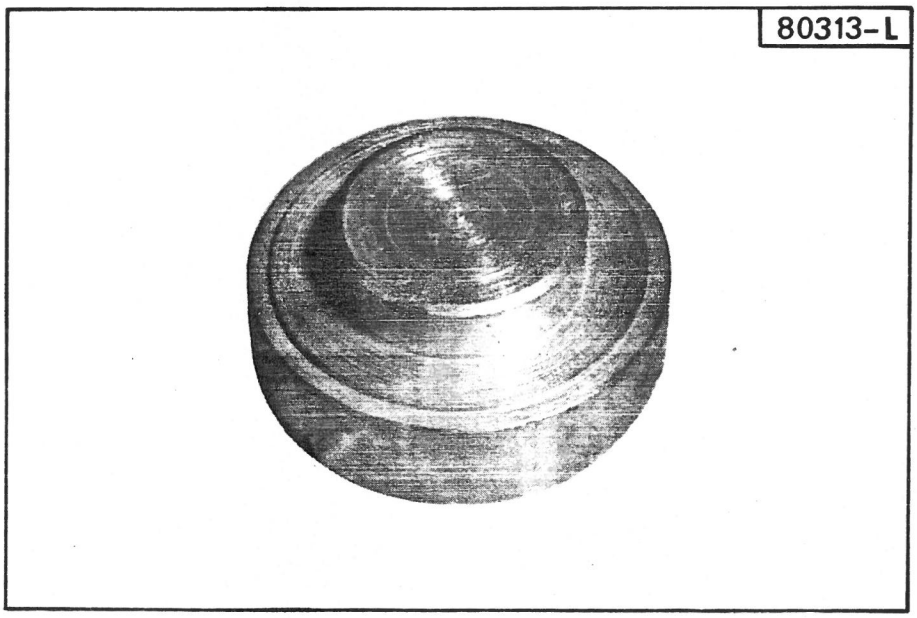

78-773

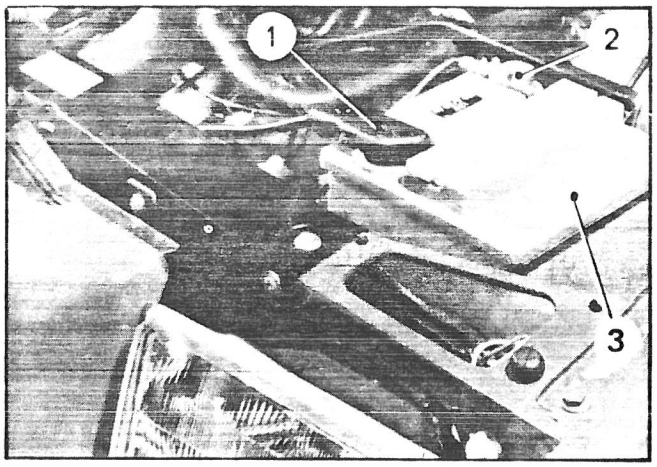

78-897

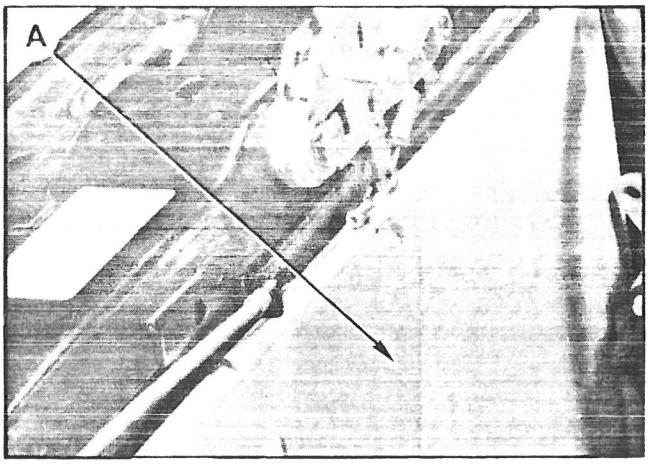

78-478

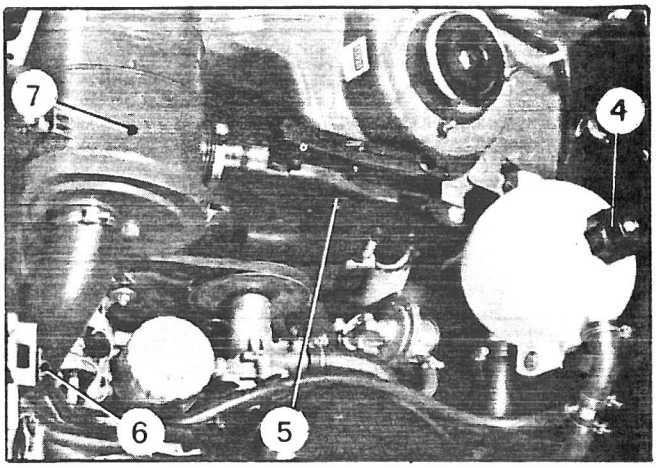

78-481

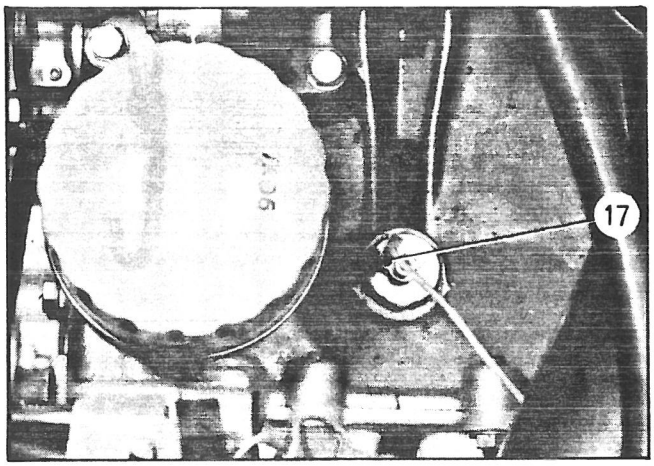

78-478

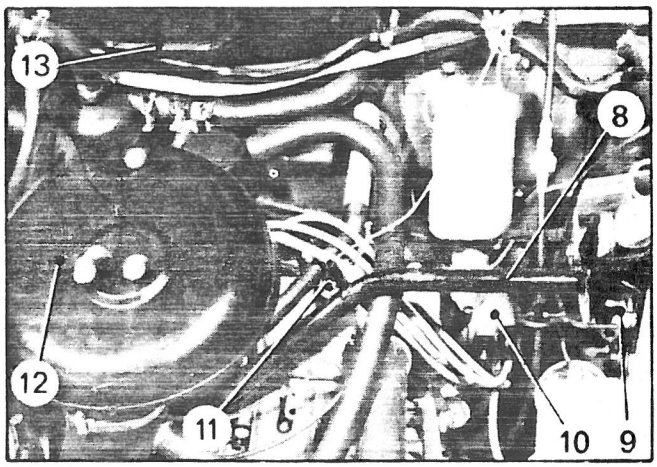

78-795

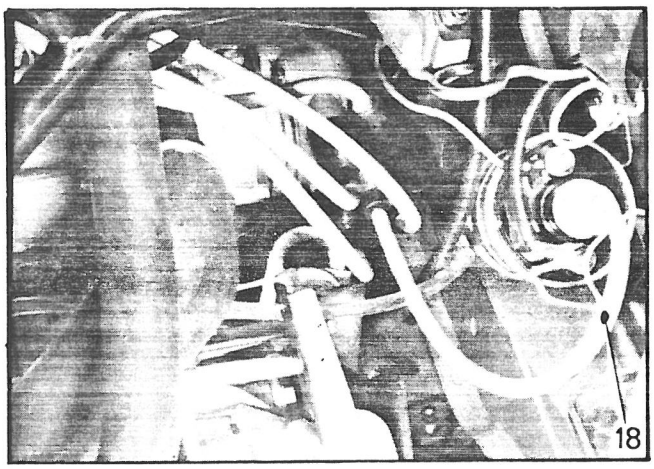

78-1018

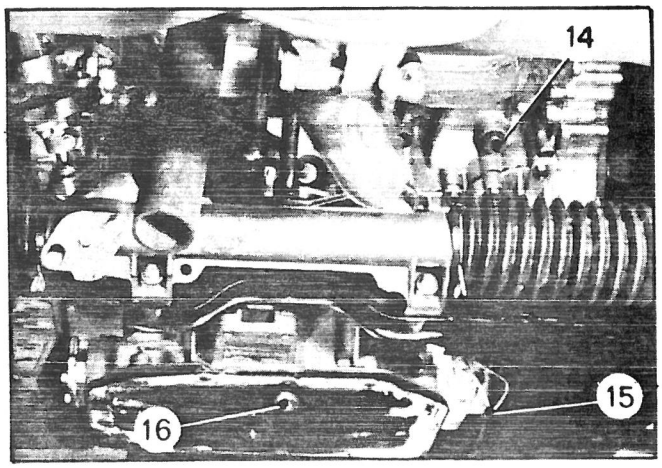

78-900

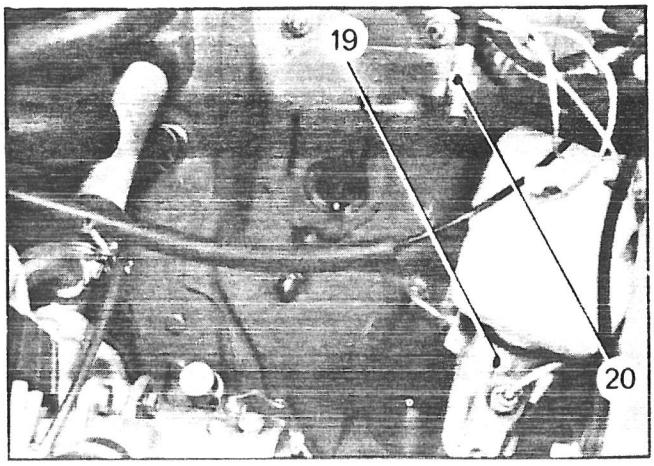

REMOVING AND FITTING AN ENGINE-GEARBOX UNIT

REMOVAL.

1. Jack up the front of the vehicle (wheels hanging free).
Disconnect the negative (2) and the positive (1) leads of the battery.
Disconnect the bonnet stay and fix vertically.

2. Remove :
- the spare wheel,
- the jack and handle.

3. To drain the cooling circuit :
Remove the rubber plug from the bottom left of the radiator and plug (14) from the cylinder block.
Use a bowl to catch the cooling fluid.
Remove the header tank plug (4).

4. To drain the engine and gearbox oil :
Remove plug (16).

5. Remove :
- the battery (3),
- the battery tray,
- the air filter (7) and its thermostat unit (5).

6. Remove :
- the resonator (12). *(Do not drop the rubber dampers and also blank off the carburettor orifice).*
- the spare wheel support bar (8).
Slacken nuts (6) and (9).

7. Radiator protection :
Fit a protection plate **A** against the inside face of the radiator.

8. Disconnect :
- the alternator supply harness,
- the oil pressure switch lead (17),
- the water temperature thermo-switch lead (11),
- the reversing lamp lead harness (15).

9. Disconnect the distributor cap (10). Unclip and rest on the engine after disconnecting the ignition coil high tension lead (18).

Remove :
- the distributor dog,
- the protection from between the head and the distributor casing.

10. Remove the master cylinder (19) :
Without uncoupling the pipes, remove the master cylinder fixing nuts and bolts and rest it on the wheel arch.

11. Disconnect the speedometer cable (20).

12. Remove :
- the capacity (1) mounting clamp (20) nut.
- the header tank attachment bolts (2).

(Recover the nylon spacer).

13. Disconnect :
- the accelerator control (6),
- the choke control (7).

14. Disconnect the clutch control :

Unhook the return spring (10).
Release the clearance adjusting lock-nut and remove the push rod.
Disconnect the stop of the clutch cable from the slotted washer (8).
Disengage the support cable.

15. Disconnect the following hoses :
- heating (11) and (12),
- the pump-radiator connection (5),
- the cylinder head-radiator connection (3),
- the radiator air release (23),
- the petrol pump inlet (25).

16. Rest the header tank (22)-capacity (1) assembly on the cylinder block.
Remove the engine-gearbox earth lead attachment nut (16).

17. Remove the exhaust flange nuts (13).

18. Disengage :
- the gearbox link rods (14) and (15).

NOTE : If difficulty is encountered in disengaging the link rods, **oil the ball joints and rotate them.**

19. Remove the engine-gearbox mounting (9), (16) and (19).

20. Bring up the lifting sling **2517-T bis** and hook onto the engine sling lugs (21) and (24).

21. Position the lifting apparatus.
Tension the lifting sling.
(Take care not to strain or damage any parts).

22. Slowly hoist the engine-gearbox unit until the distributor shaft lines up with the lower mounting **A** of the master cylinder.
Then push the unit as much as possible towards the right wheel arch in order to disengage the left drive-shaft. *Take care not to knock or scratch the gasket surface.*
Then proceed in the same way to the left to disengage the right hand drive-shaft.

23. Completely disengage the engine-gearbox unit.

78-478

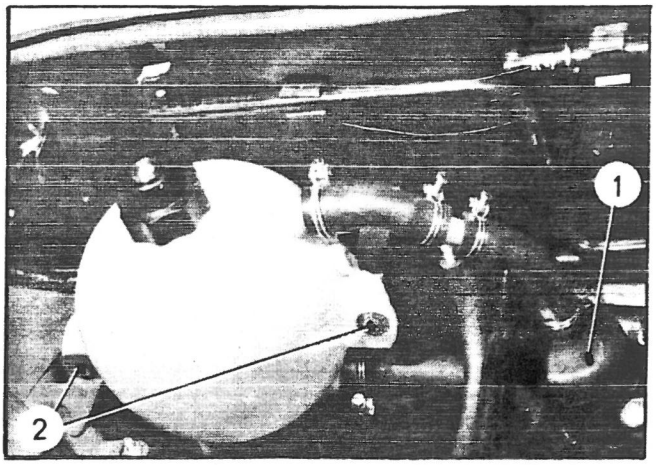

78-1019

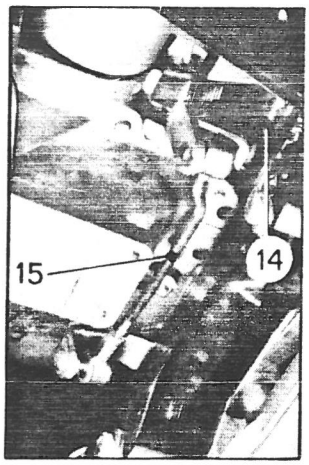

78-694

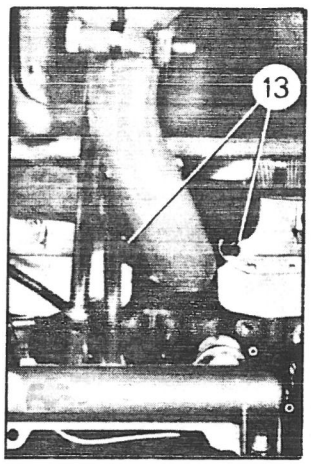

78-899

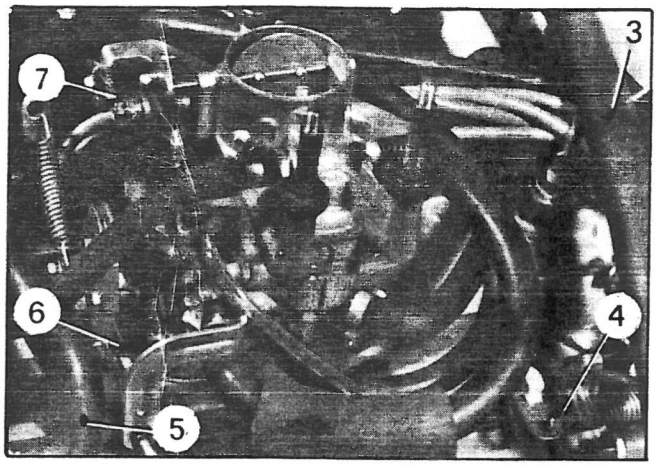

78-800

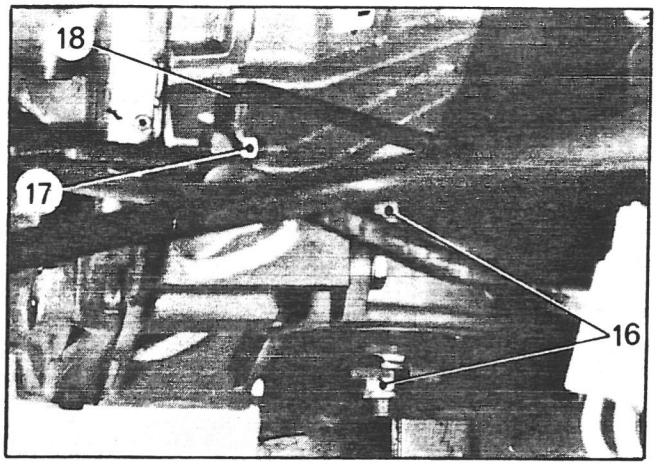

78-900

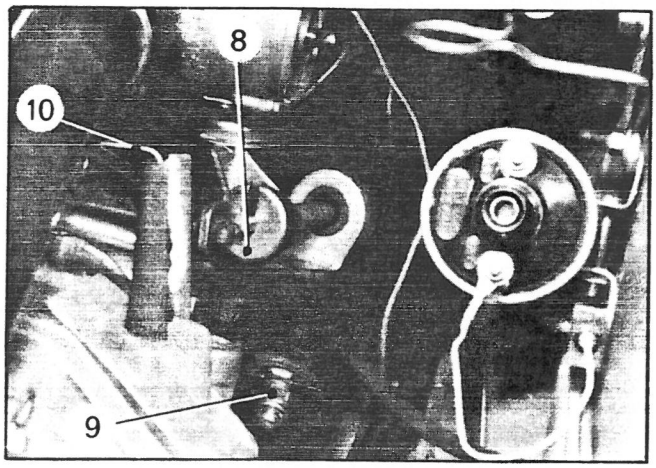

78-911

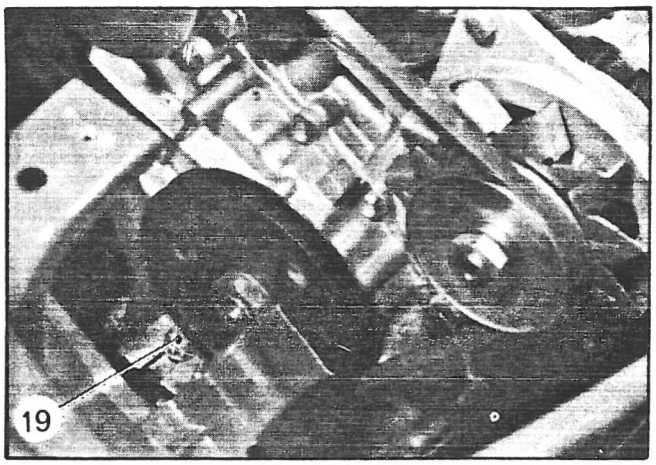

78-900

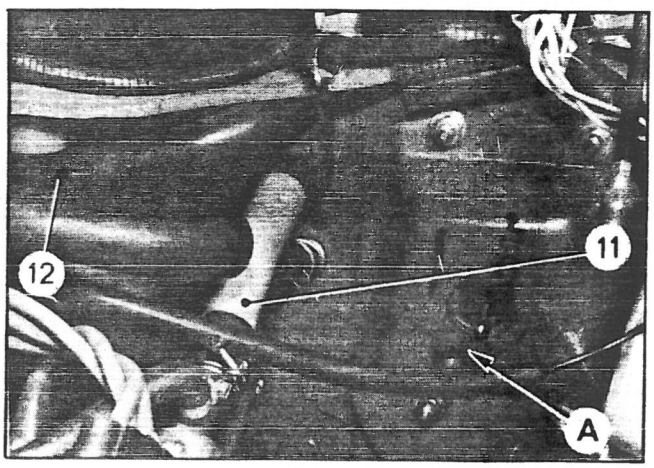

78-910

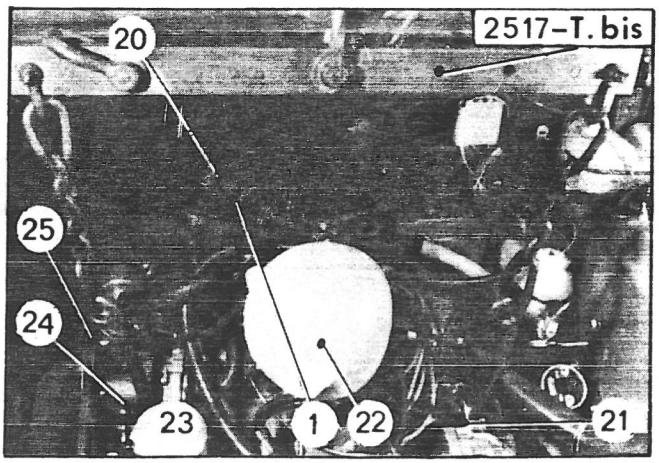

78-777

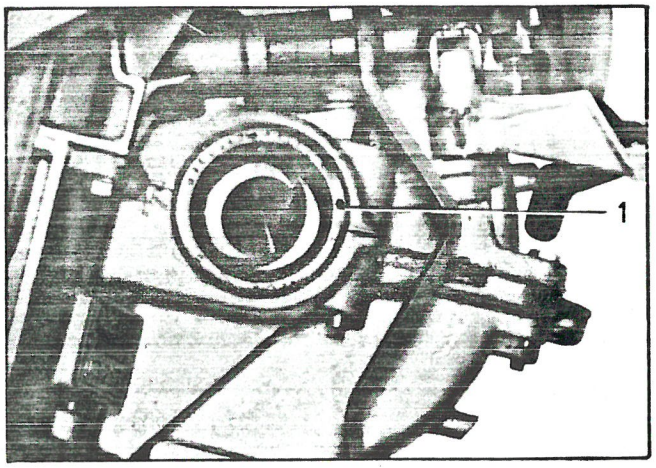

78-911

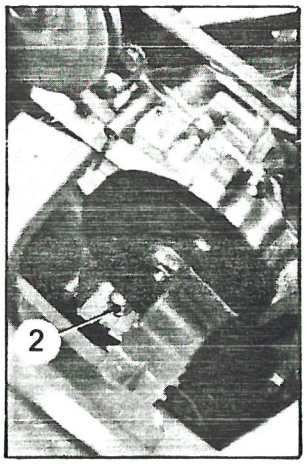

78-800

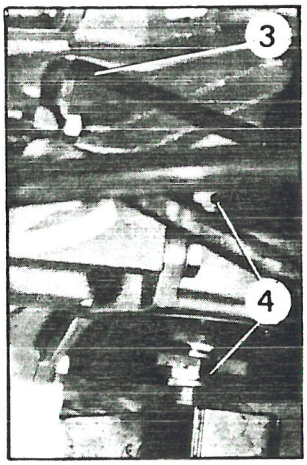

78-897

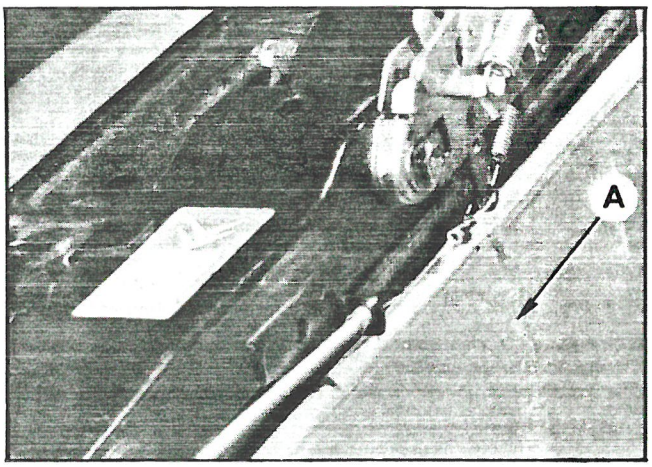

78-900

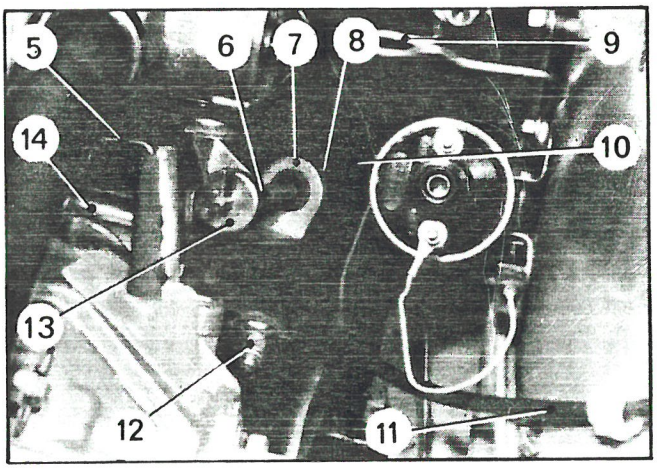

78-910

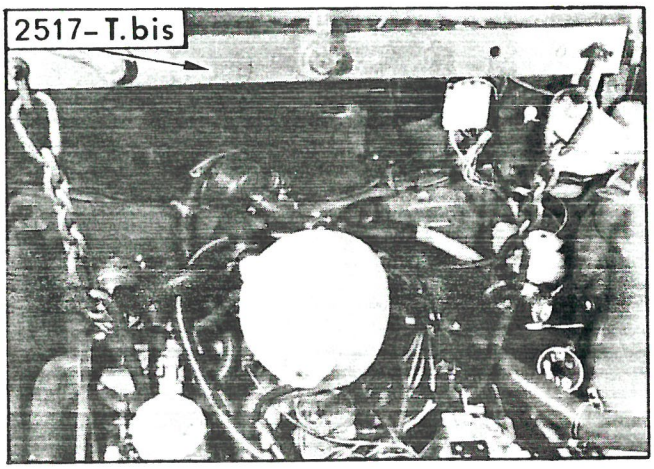

78-1017

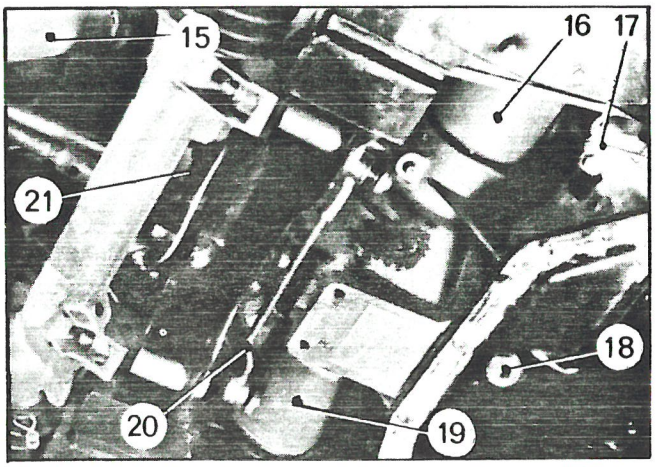

78-900

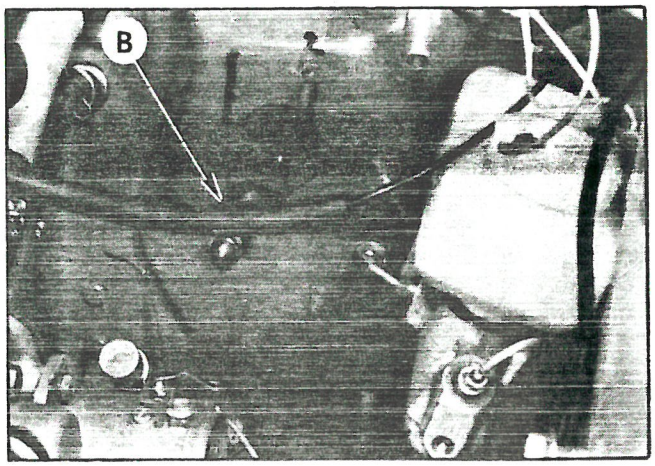

78-898

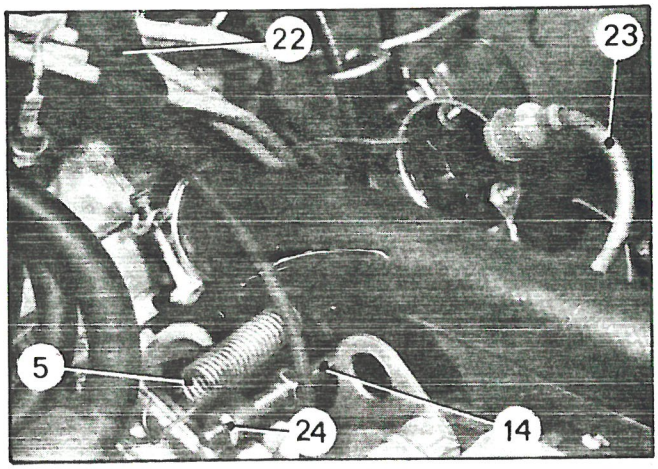

FITTING

Check that the radiator protective panel **A** is in position.
Fit the radiator drain pipe plug and clamp.

Preparation of engine :
Change the transmission outlet seals (1) : smear the seal lips with TOTAL MULTIS MS grease.

Use mandrel **8.0313-T.L**

Fit the engine-gearbox oil drain plug.

To fit the engine to the car :

1. Offer up the engine-gearbox unit fitted with the sling **2517-T bis**

2. Lower the assembly until the distributor shaft lines up with the lower mounting **B** of the master cylinder.

3. **Drive-shaft coupling (16) and (19) :**
   Push the engine-gearbox unit to the maximum to the side opposite the drive-shaft fitting side.
   Guide the drive-shaft until it is fully home. *(Take care not to damage the seals during this operation).*

4. **Position the engine-gearbox unit on the mountings :**
   Check the position of the washers.
   Disconnect the sling **2617-T bis**
   Screw up without tightening the nuts on the right hand side (2) and the left hand side (4) and (12).
   Tighten the right hand side (2) to : **2 to 2.5 m.daN,** and the left hand side (4) and (12) to : **4.5 to 5 m.daN** *(torque wrench).*
   Remove the sling **2517-T bis**

5. Connect up the exhaust pipe (15).
   Tighten the clamp nuts to : **1.25 to 1.75 m.daN.**

6. Couple the gearbox control link rods (20) and (21).
   Grease and clip in the pins.
   Check correct operation of gear change. Adjust if necessary.
   (See Operation VD2. 330-00).

7. Connect up the reversing lamp leads (17).

8. **Connect up the clutch control rod :**
   Offer up the cable (10) through its support (7) fitted with rubber grommet (8).
   Fit the damper washer (6) and slide the split washer (13) under the cable stop.
   Check that the cable (10) is properly clipped to the pedal.
   Attach the spring (5).

9. **To adjust the clutch clearance :**
   Unhook the spring (5).
   Slacken off the lock-nut (24).
   Unscrew the push-rod (14) until there is no free-play in the fork.
   Tighten the push-rod (14) a quarter turn.
   Tighten the lock-nut (24).
   Hook on the spring (5).

10. **To connect up the speedometer cable (11) :**
    Thread it through its guide ring (9).
    Connect up the cables.

11. **Fit the distributor casing :**
    - with the protector between the cap and the casing,
    - the distributor pin (clip in),
    - the sparking plug leads in the cable guide (22).

12. **Connect up :**
    - the high tension lead (23) to the ignition coil,
    - the engine-gearbox earth lead to the clutch housing.

13. Connect :
- the water temperature thermal switch lead (4),
- the oil pressure switch lead (1),
- the starter solenoid excitation lead,
- the alternator harness.

14. Remove the radiator protective panel.

15. Connect the petrol pump inlet hose (5).

16. Fit :
- the header tank (8),
  (Do not forget the nylon spacer).
- the capacity (6) fixing clamp.

Adjust the capacity (6) clamp.

17. Connect up the following hoses :
- heater supply (3) and return (4),
- water pump to radiator (10),
- cylinder head to radiator (7),
- radiator de-aeration (9).

Tighten the clips.

18. Connect up :
- the accelerator control cable (12) and adjust,
- the choke control cable (11) and adjust.

19. Fit the cylinder block drain plug (13), (new seal).
Torque = 3 to 4.5 m.daN
Fill and bleed the cooling circuit.

20. Tighten the engine oil drain plug (14) to **2.5 to 3 m.daN** (new seal).
Top up the oil through filler **A**.
TOTAL GTS 15 W 40 all weather or GT 10 W 30 winter oil.

21. Fit :
- the air filter (17),
- the thermostat unit (15),
- the Westaflex tube (16),
- the master-cylinder (18),
- the spare wheel support bar (19) and clip on the de-aerating pipe (9),
- the resonator.

(Fit the rubber and flat washers).
Tighten the nuts.

22. Fit :
- the battery tray (21),
- the battery (22),
- the mounting plate (24),
- the negative lead,
- the positive lead (23),
- the spare wheel,
- the jack,
- the handle.

23. Connect up the bonnet stay.

23. Set the vehicle on the ground.

If removal was carried out for reconditioning of the engine or standard exchange, the cylinder head must be re-tightened.

Turn the engine until the fan motor starts and then **leave to cool for at least 2 hours.**

Bolt by bolt, slacken each bolt and re-tighten to : 6.5 to 7 m.daN following the tightening sequence.

Adjust the rockers *(see Op. VD2. 112-0).*

78-481

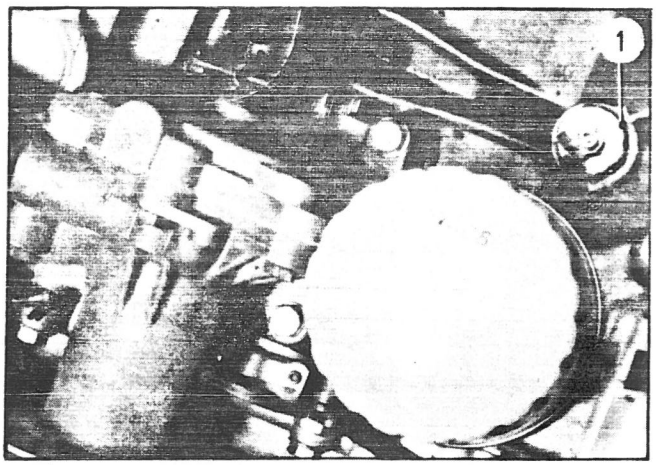

78-899

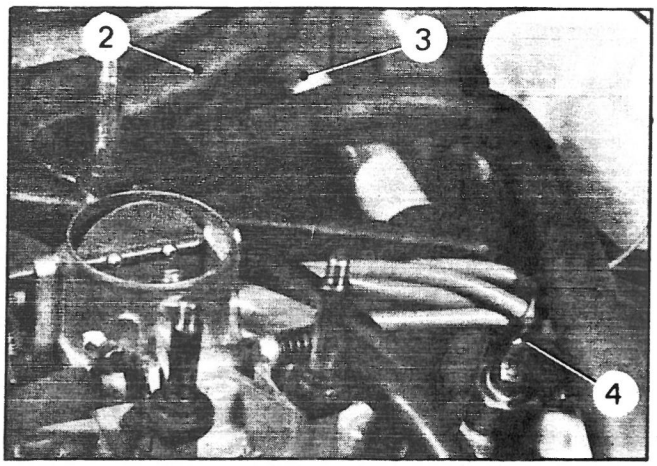

78-479

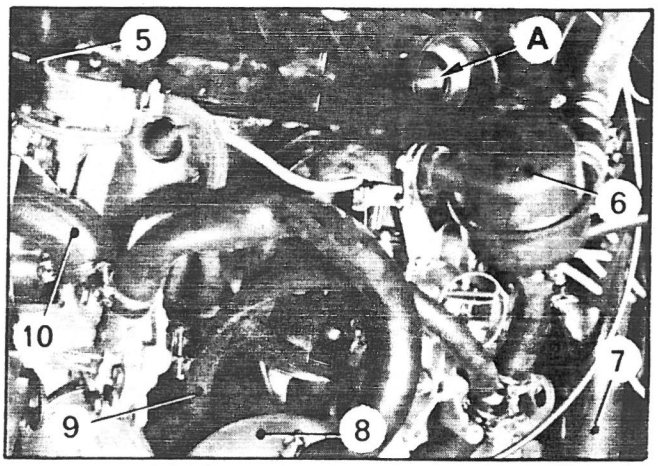

78-898

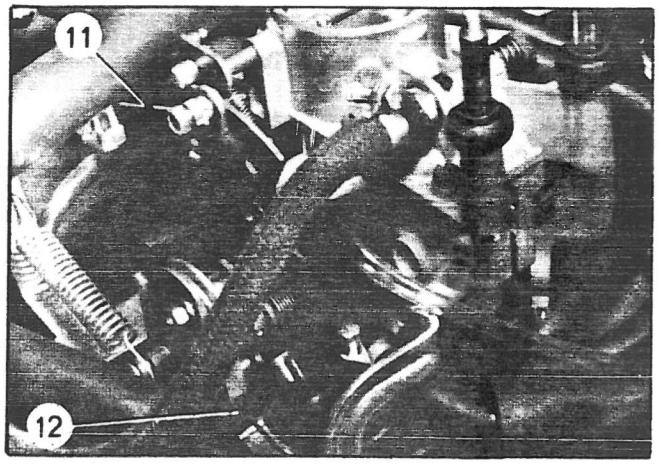

78-1018

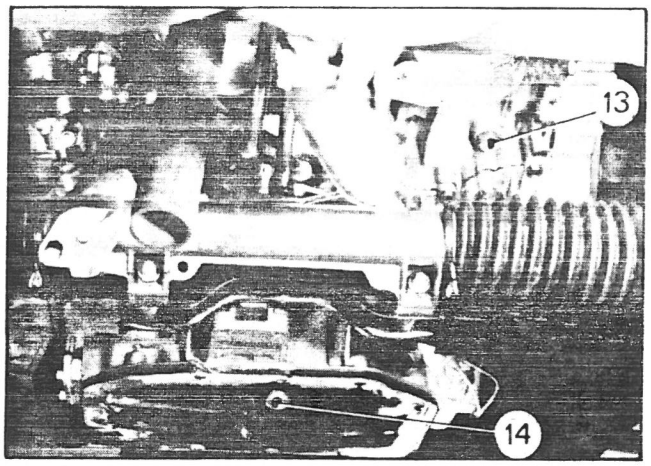

78-478

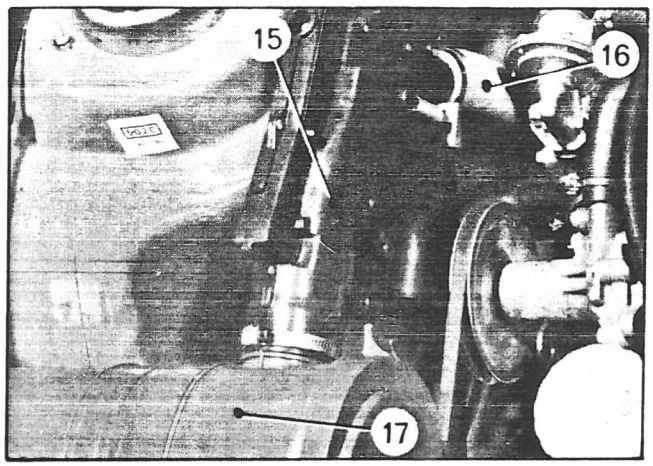

78-1017

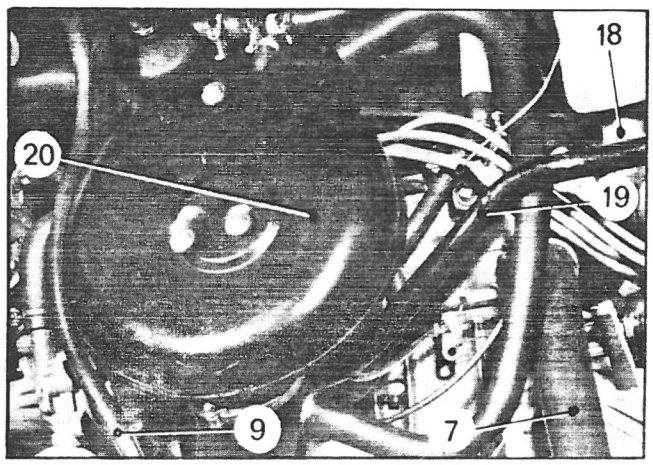

78-478

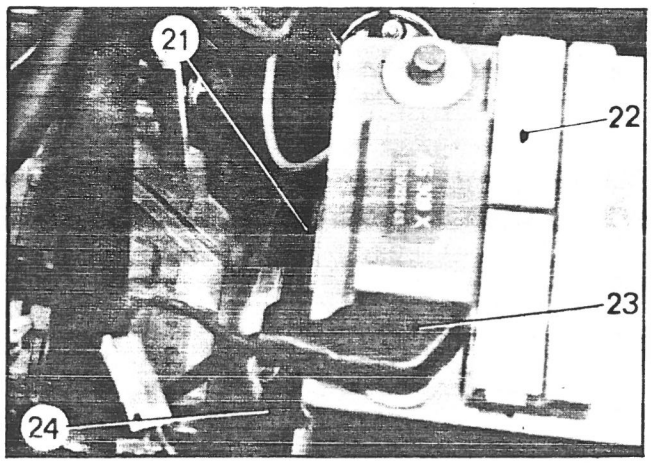

OPERATION
VD2. 372-1

REMOVING AND FITTING A DRIVE-SHAFT UNIT

SPECIAL TOOLING

TOOLS SOLD

1892-T bis : Ball-joint extractor

803 13 L : Mandrel for fitting the gearbox output shaft seal

6310-T : Tool for holding hub

TIGHTENING TORQUES

Compulsory tightening torques *(torque wrench) :*

Tightening point	Torque in m.daN
Damper to pivot mounting Nylstop nuts	6 to 8
Link rod ball-joint Nylstop collar nut	3 to 4
Brake caliper mounting bolt (LOCTITE FRENETANCH)	8 to 9
Drive-shaft to pivot mounting nut *(lock by peening metal)*	23 to 26

13 549

1892-T bis

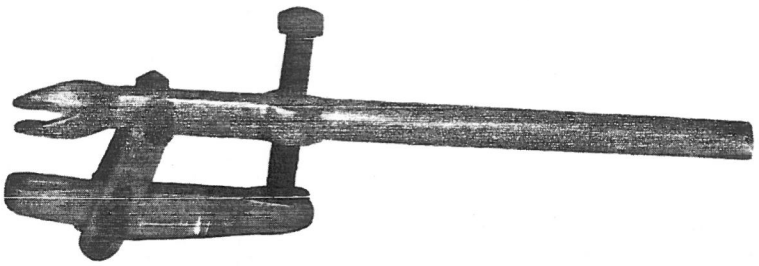

78-359

80313-L



13 723

6310-T

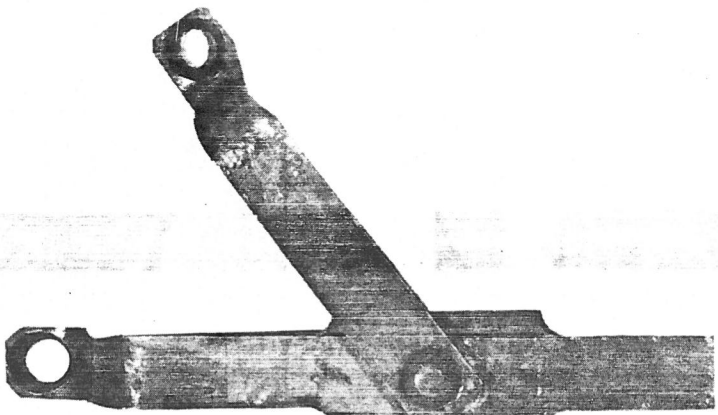

78-692

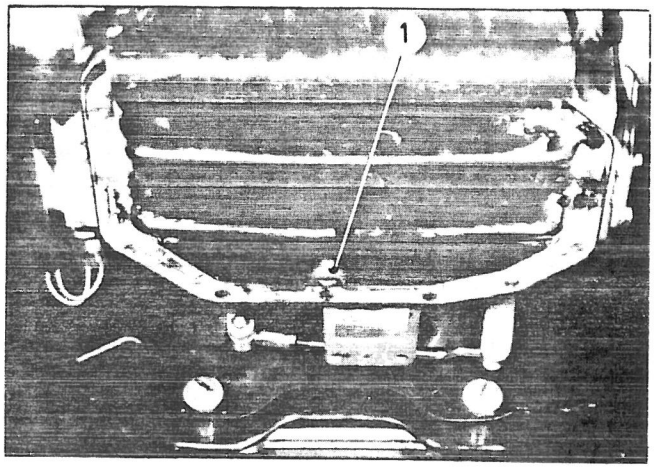

78-777

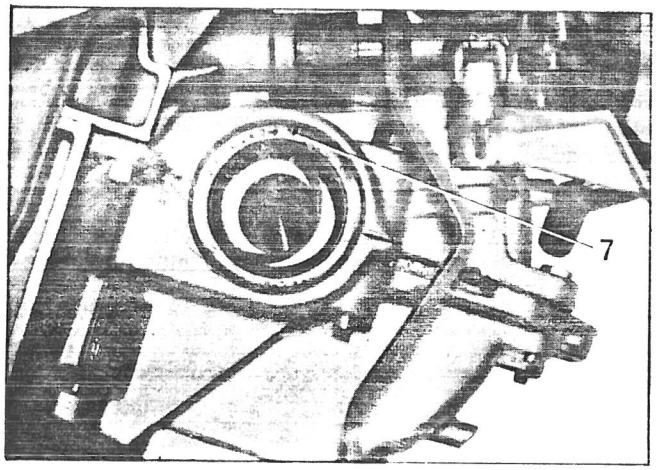

78-166

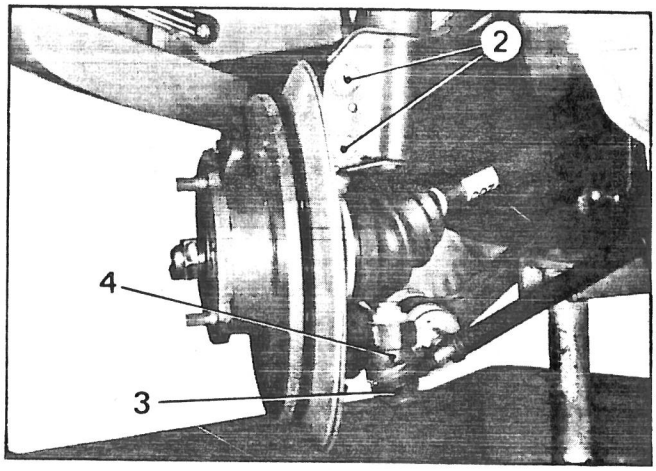

78-161

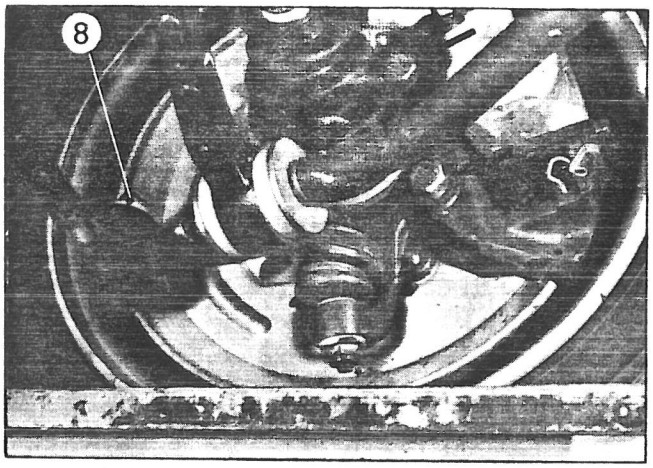

78-167

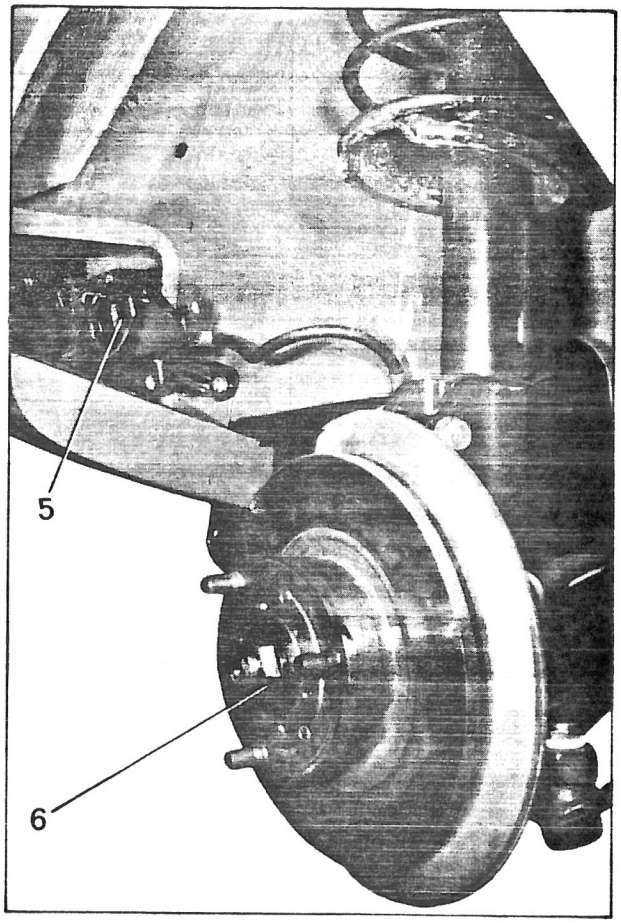

78-168

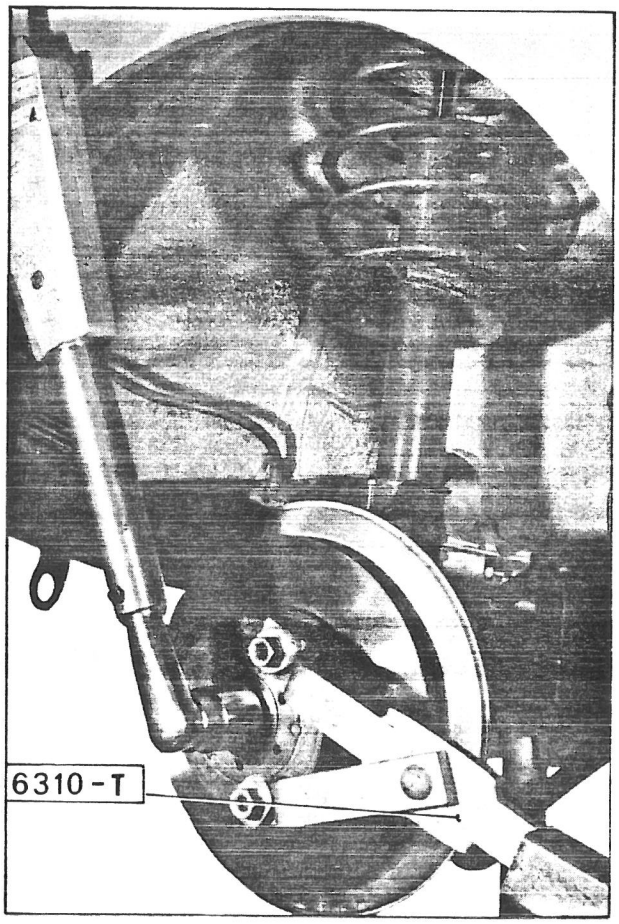

REMOVAL

Remove the drain plug (1) and let run off approximately half a litre of oil.

1. Slacken the wheels nuts.

2. Jack up the vehicle under the front subframe, with the front wheels hanging and remove the wheel.

3. Uncouple the track-rod ball-joint (3), (extractor 1892-T).

Take care not to damage the ball-joint rubber cover (4).

4. Disconnect the brake caliper (5) from the hub and suspend it without opening the hydraulic circuit. *(On BENDIX brake calipers, insert a piece of rubber tube between the pads to prevent them from dropping out).*

5. To remove the drive-shaft :
   a) Slacken and remove nut (6), hold hub in position with tool 6310-T
   b) Remove the damper lower mounting nuts and bolts (2) and pull the hub.
   c) Remove the drive-shaft from its housings.

6. **Remove the seal (7).**

NOTE : We recommend changing the seal (7) on each operation, since a faulty seal can result in total loss of the engine-gearbox oil.

FITTING

7. Fit the seal (7) after cleaning its housing.
   Use mandrel 8.0313 L to fit the seal.

8. To fit the drive-shaft :
   a) Engage the drive-shaft in the differential housing splines. (Take care not to damage the seal (7)).
   b) Then insert the other end in the hub.
   c) Fit a new nut (6). *(Lock the hub using tool 6310-T).*
   Tightening torque = 23 to 26 m.daN *(torque wrench).*

9. **Connect up the suspension unit :**
   Fit bolts (2) (heads facing the back of the vehicle) and new Nylstop nuts.
   Tightening torque = 6 to 8 m.daN *(torque wrench).*

10. Check that the ball-joint cover (4) is in perfect condition and connect up the steering link-rod.
    Tighten the new Nylstop nut (8).
    Tightening torque = 3 to 4 m.daN *(torque wrench).*

Lock nut (6) using a round-tipped tool.

11. De-grease both sides of the disc.
    Fit the caliper.
    (BENDIX caliper, remove the pad locking spacer).
    Coat the two bolts (➡) with LOCTITE FRENETANCH **and tighten to a torque of 8 to 9 m.daN** *(torque wrench).*

12. Fit the wheel.
    Lower the car onto its wheels.

13. Top up the engine-gearbox oil and check the level.

OPERATION
VD2. 416-1

REMOVING AND FITTING A FRONT HUB

SPECIAL TOOLING

TOOLS SOLD

1892-T bis : Ball-joint extractor
4028-T : Suspension compression tool
6310-T : Hub locking tool

TIGHTENING TORQUES

Compulsory tightening torques *(torque wrench) :*

Tightening point	Torque in m.daN
Damper upper mounting Nylstop nuts	0.75 to 1.25
Link rod ball-joint Nylstop collar nut	3 to 4
Brake caliper mounting bolt (LOCTITE FRENETANCH)	8 to 9
Anti-roll bar bearing bolt (spring washer)	12.2 to 13.5
Suspension arm swivel Nylstop nut	4 to 5
Anti-roll bar Nylstop nut	6 to 7
Lower swivel ball-joint Nylstop nut	3 to 4
Transmission to swivel attachment nut *(peen to lock)*	23 to 26
Drive-shaft to gearbox drive outlet mounting bolt *(spring washer)*	2.8
Damper to swivel Nylstop mounting nut	6 to 8

13549

1892-T. bis

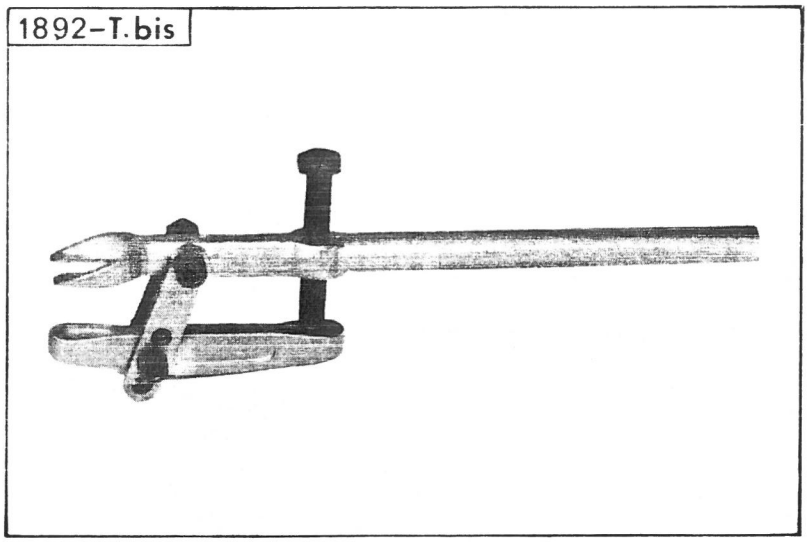

78 208

4028-T

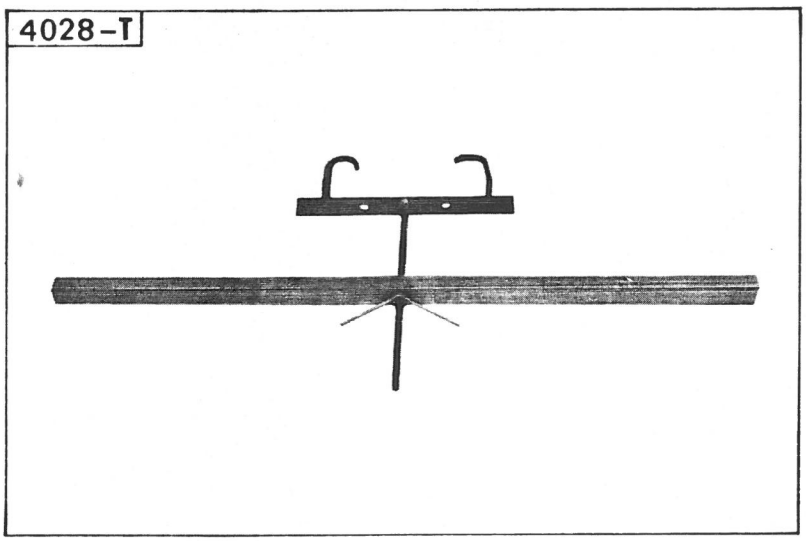

13723

6310-T

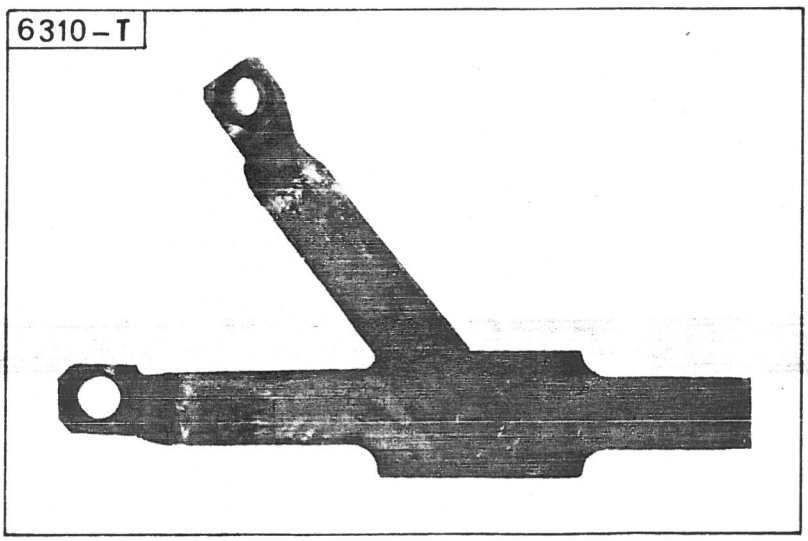

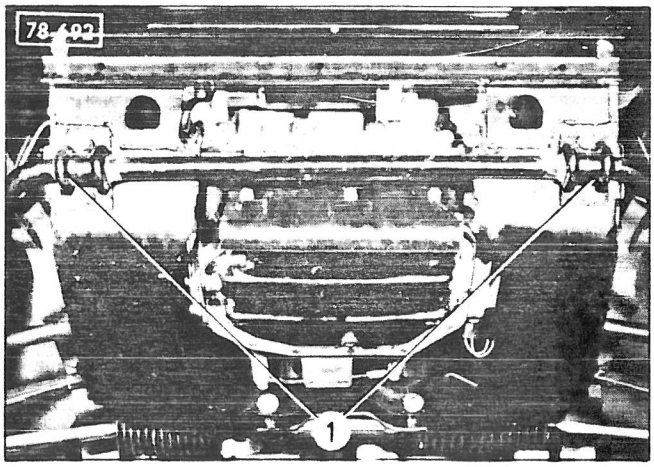

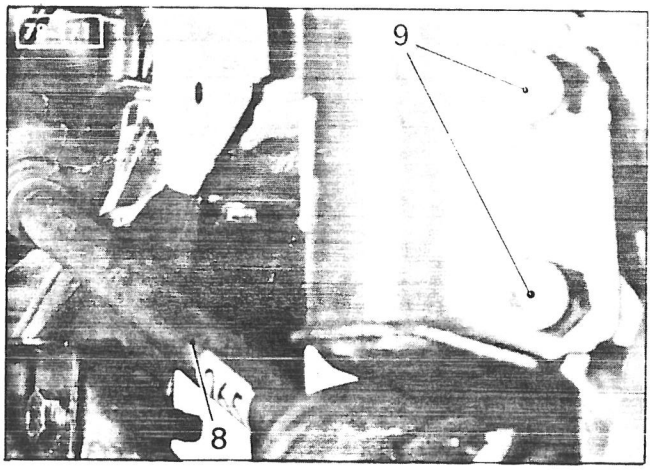

78-162

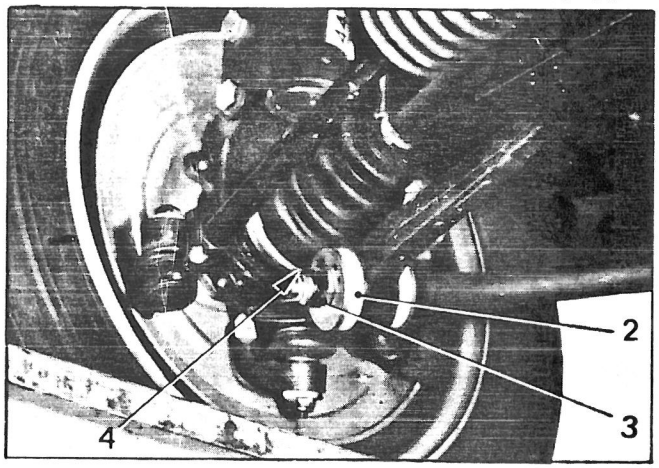

78-165

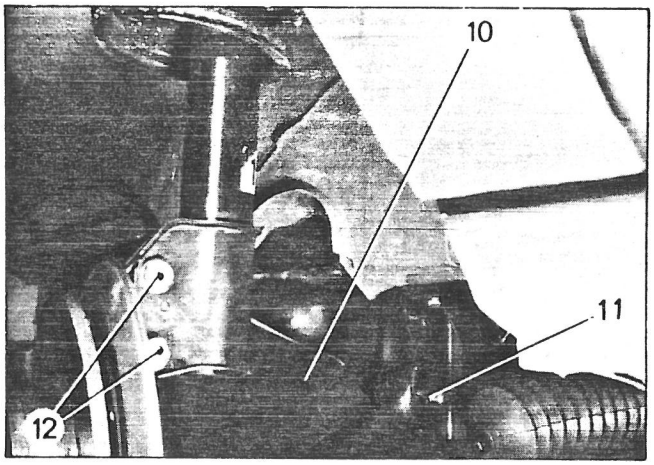

78-167

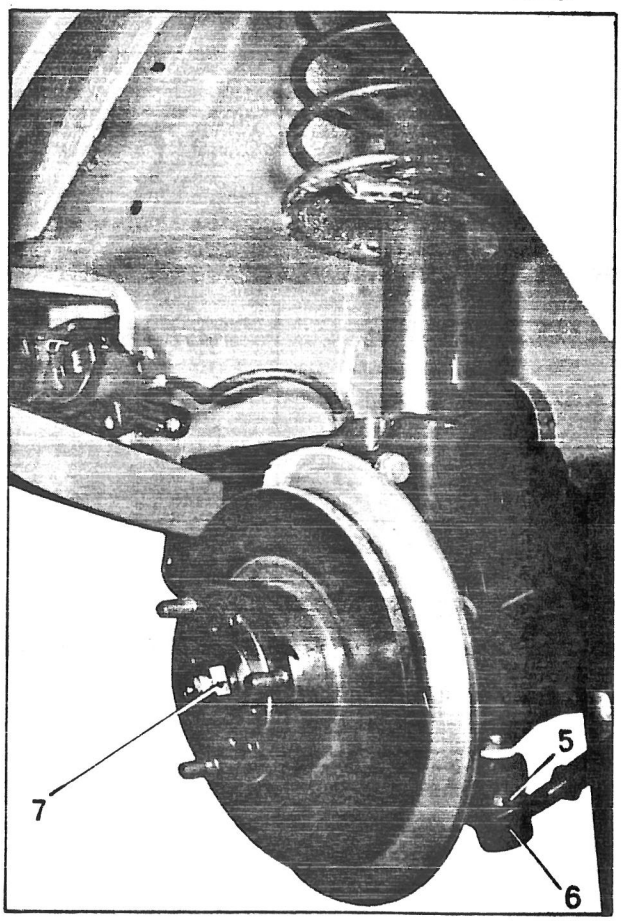

78-168

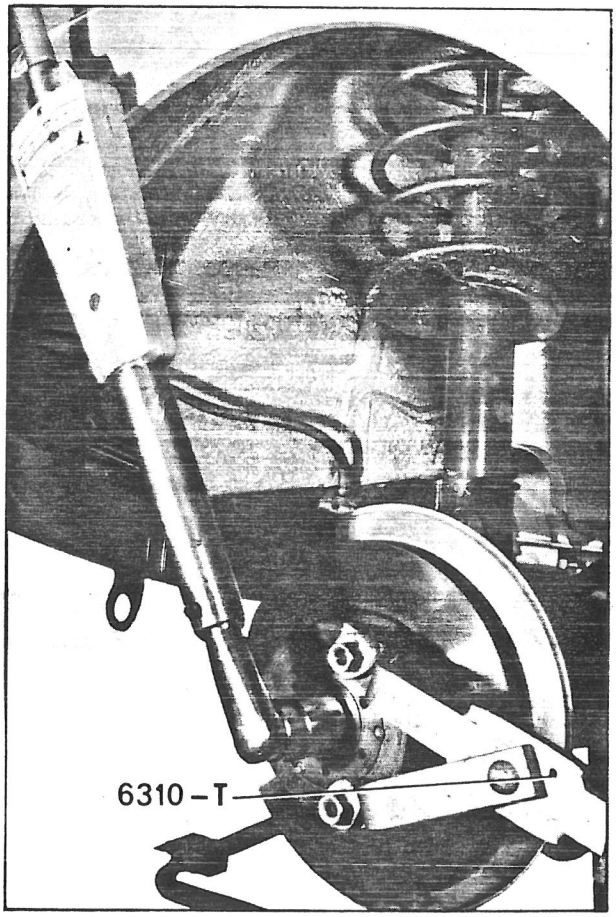

REMOVING AND FITTING A FRONT HUB

REMOVAL.

This operation is to be carried out on a carlift or over a pit.

1. Disconnect the anti-roll bar bearings (1) from the front subframe.

On the hub removal side :

2. Slacken the wheel bolts.

3. Remove :
- the split pin (4),
- the Nylstop nut (3),
- the washer and mounting pad (2).

4. Remove the anti-roll bar.

5. Support the vehicle under the front subframe, with the front wheels hanging free and remove the wheel.

6. Disconnect the track rod ball-joint (6).
(Extractor **1892-T bis**).

Take care not to damage the ball-joint rubber protector (5).

7. Remove and suspend **the brake caliper without opening the hydraulic circuit** *(on the « BENDIX » brake caliper, insert a piece of rubber pipe between the pads to prevent them from falling out).*

7. Remove the drive-shaft :
a) Loosen and remove nut (7), hold hub in place using tool **6310-T.**
b) Unclip mudflap (10).
c) Remove the drive-shaft.

8. Remove nut (11) and swivel bolt.

9. Remove the damper lower mounting nuts (9) and remove the hub.

FITTING.

10. Offer up the hub to the damper mounting, insert the bolts (12), **head towards the rear of the vehicle** and tighten the *new* Nylstop nuts (9) to a torque of **6 to 8 m.daN.**
Fit the swivel bolt and a *new* Nylstop nut (11) **without tightening.**

11. To fit the drive-shaft (8) :
a) Engage the drive-shaft in the hub splines.
b) Fit *new* nut (7) *(lock the hub using tool* **6310-T** *)*
Torque : 23 to 26 m.daN *(torque wrench).*

Lock nut (7) using a blunt ended tool.

d) Pin on the flap (10).

12. Check that the ball-joint (1) protector is in perfect condition and connect the link rod (ball-joint cone de-greased and new Nylstop nut).
Torque : 3 to 4 m.daN *(torque wrench).*

13. Degrease both sides of the disc.
Fit the caliper :
(BENDIX caliper : remove the blocking spacer from between the pads).
Coat the **two bolts (➡) with LOCITITE FRENETANCH and tighten to : 8 to 9 m.daN** *(torque wrench).*

14. Fit the wheel :
Lower the vehicle onto its wheels and push it to and fro to obtain its normal position.
Compress the suspension until the suspension arms are in line with the front subframe (tool **40289-T**).
Put on the handbrake and push the wheel as far as possible to the rear of the vehicle and wedge it in this position.

15. To connect the anti-roll bar :
Engage the anti-roll bar and insert :
- washer (2),
- the washer and mounting pad (3),

The mounting pads should be **pre-impregnated with** ESSO TERESSO 120 or SHELL TELLUS 75 **oil.**

- the pad (4),
- the *new* Nylstop nut (7) without tightening it.

16. Grease bearings (9). *(KLUBER grease, reference P.R. : 79.01-973-067).*
Tighten the bearing mounting bolts *(spring washer)* **to : 12.2 to 13.5 m.daN** *(torque wrench).*

17. Tighten :
- **the swivel pin nut (10) to : 4 to 5 m.daN,**
- **the anti-roll bar nut (7) to : 6 to 7 m.daN** *(torque wrench).*

Fit the split pin (8).

18. Release the suspension and check tightness of wheel nuts.

NOTE : If removal requires disengagement of the ball-joint (6), **check the condition of the rubber protector (5).**

Fit a *new* Nylstop nut.
Torque : 3 to 4 m.daN *(torque wrench).*

78-167

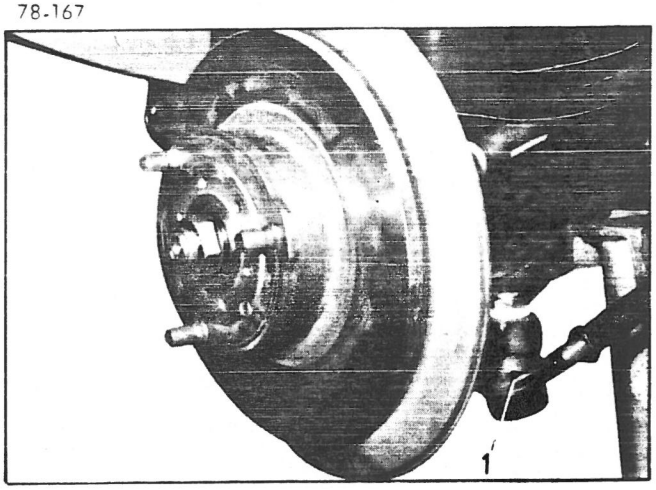

78-162

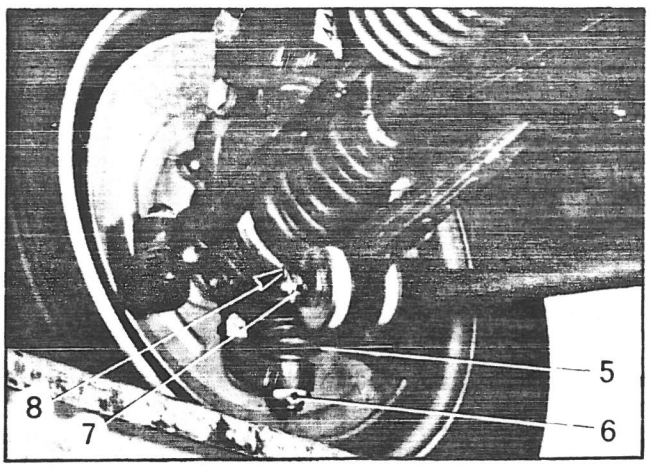

78-170

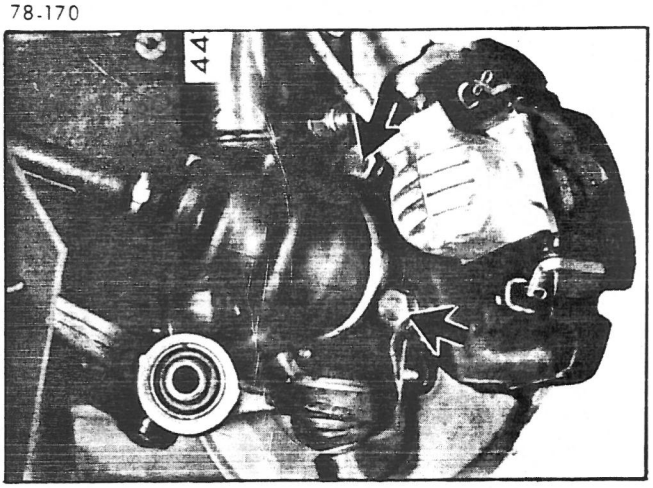

78-692

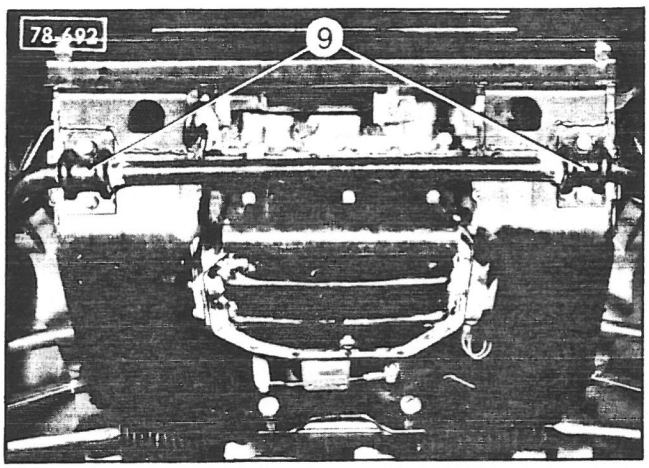

79-349

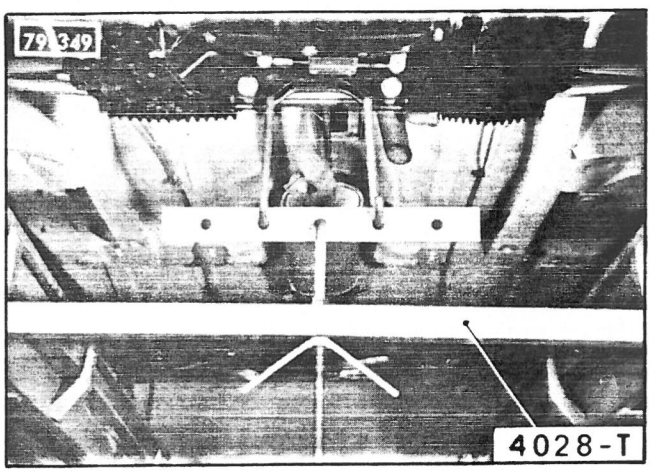

78-171

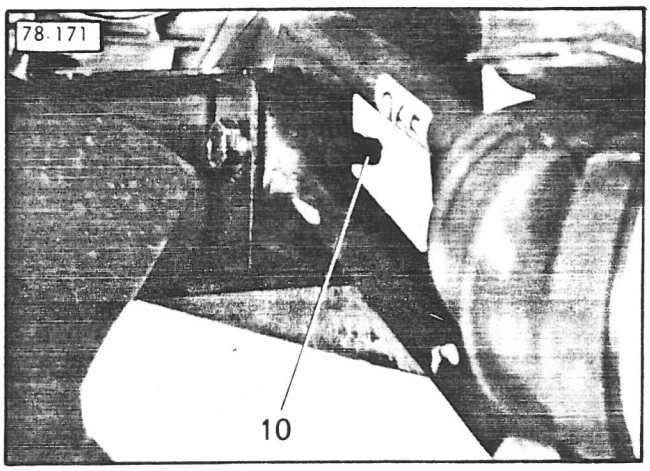

78-161

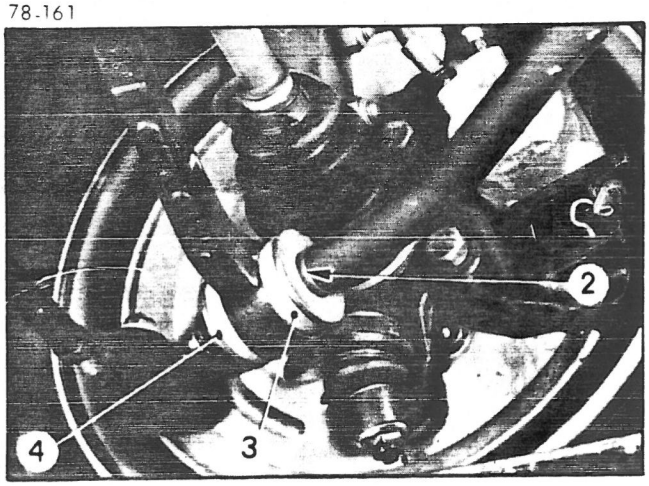

OPERATION
VD2. 422-1

REMOVING AND FITTING A REAR WHEELARM

SPECIAL TOOLING

TOOLS SOLD

8.1509-T : Rear lifting crossmember
4028-T : Suspension compression tool
2305-T : Shell clearance gauge
Kit 8.0908-T tool [K] : Spanner for rear arm nuts

TIGHTENING TORQUES

Recommended tightening torques :

Tightening point	Torque in m.daN
Side support mounting Nylstop nuts *(flat washer)*	4 to 5
Arm swivel pin Nylstop nuts	7 to 8
Central support mounting bolts *(serrated washer)*	4 to 5
Damper fork nut	3 to 4
Damper fork nut locking bolt	3.5 to 4
Seat belt mounting bolts	3
Anti-roll bar mounting bolts	3 to 4

76-656

8.1509-T

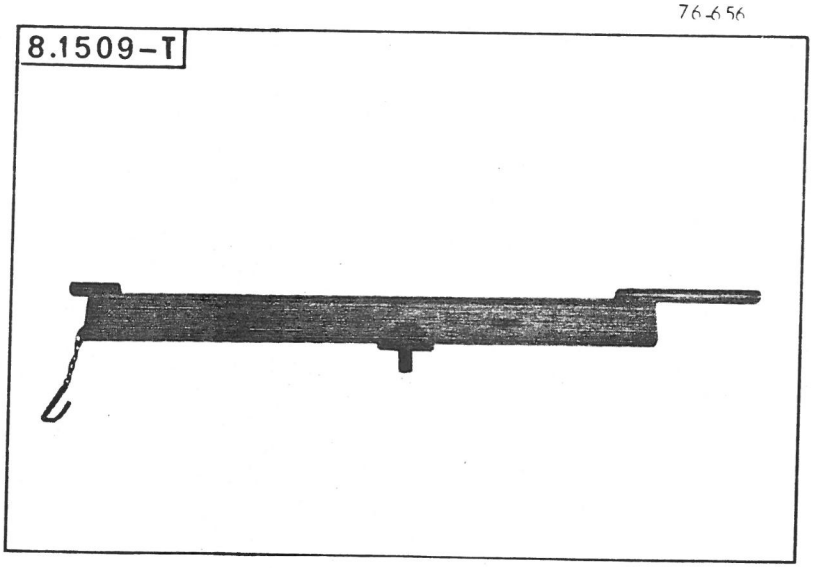

78-208

4028-T

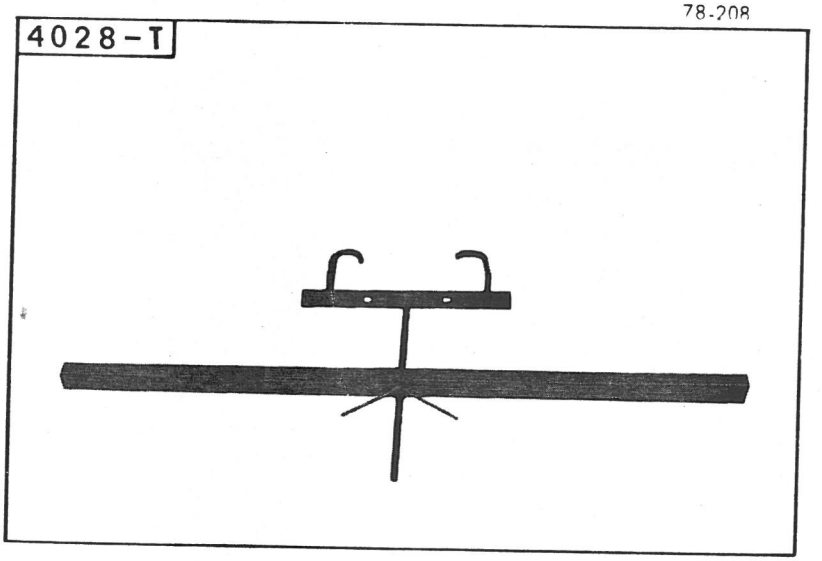

76-708

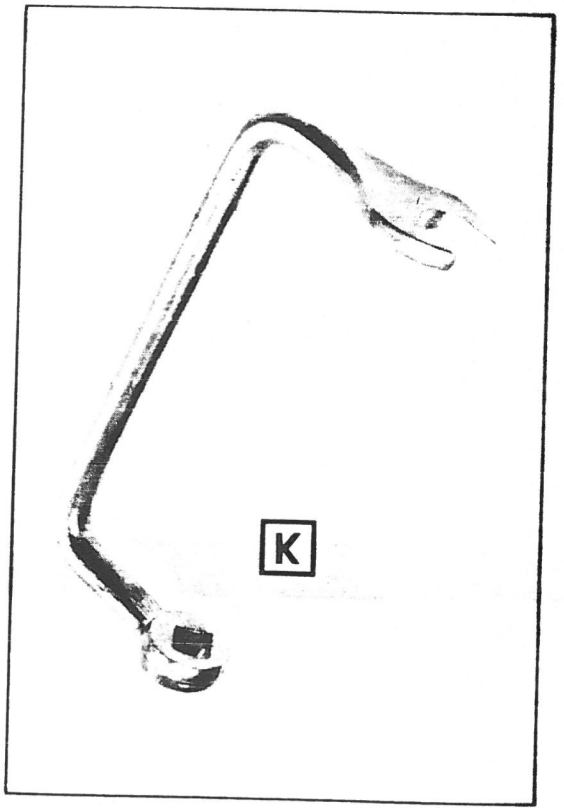

76-655

2305-T

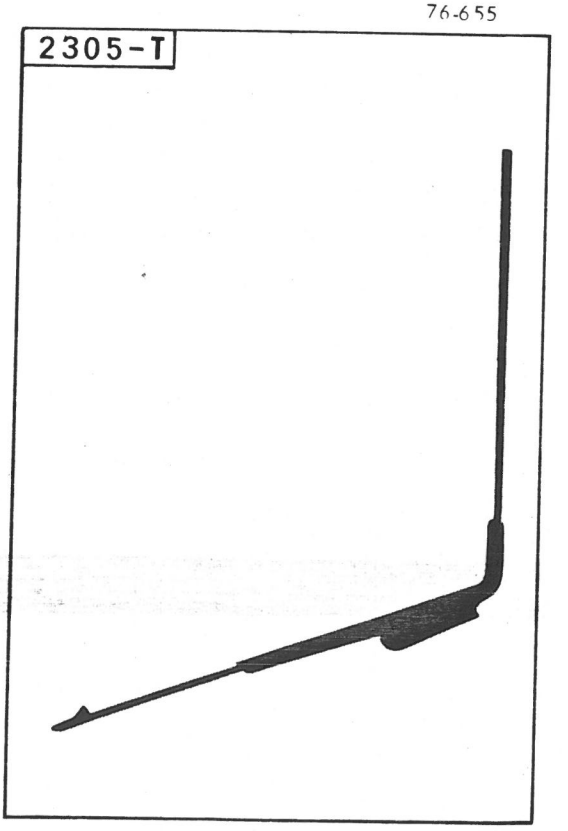

78-596

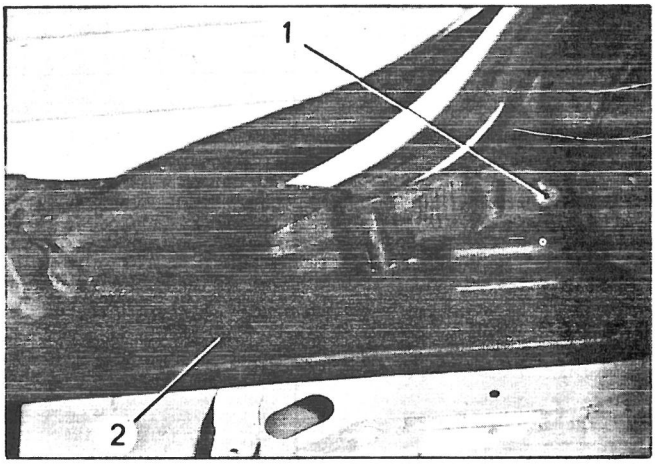

78-595

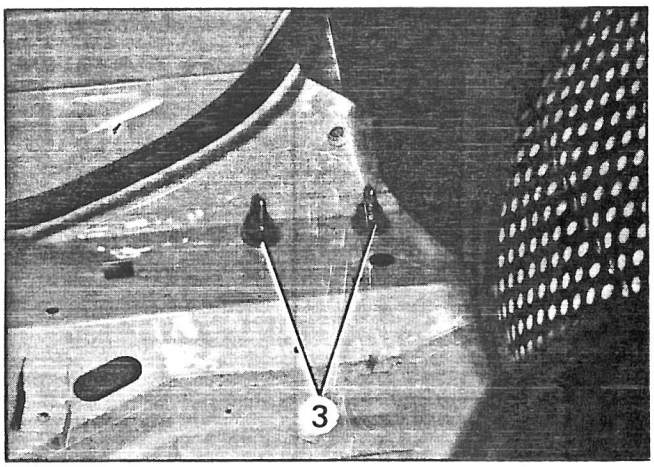

78-594

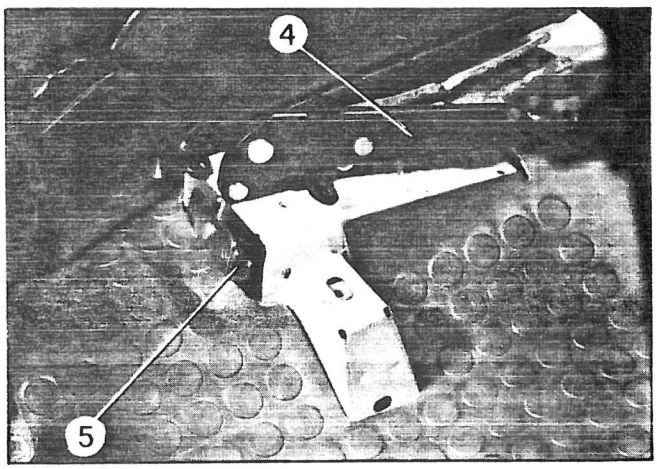

78-475

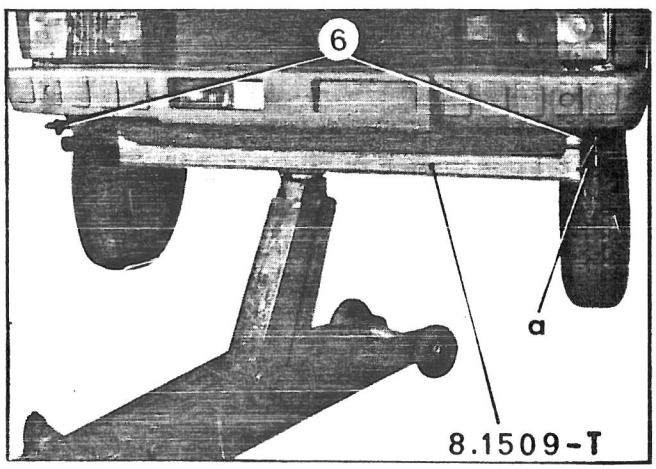

78-692

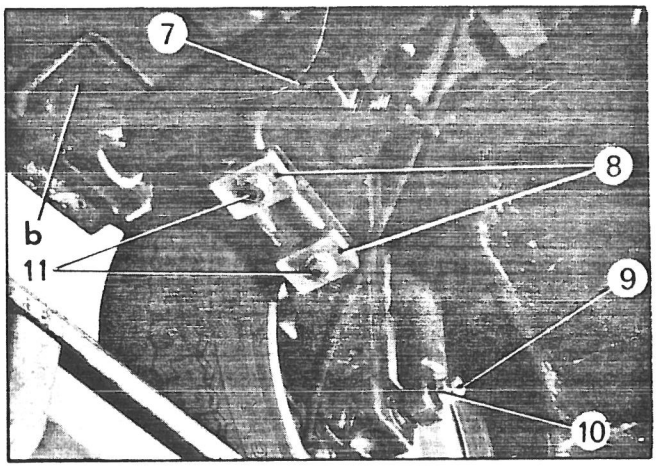

76-575

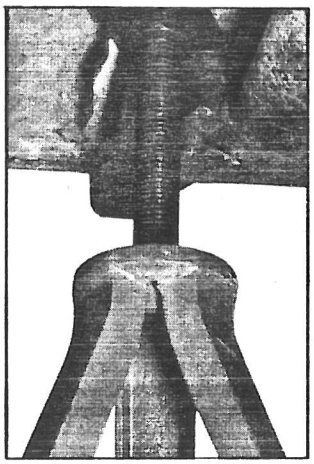

76-573

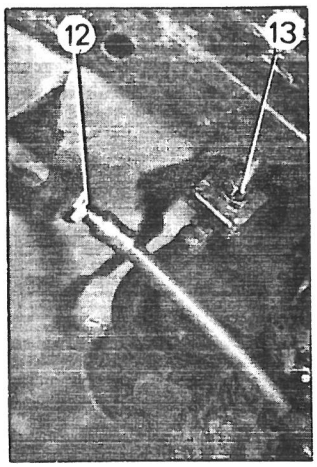

78-731

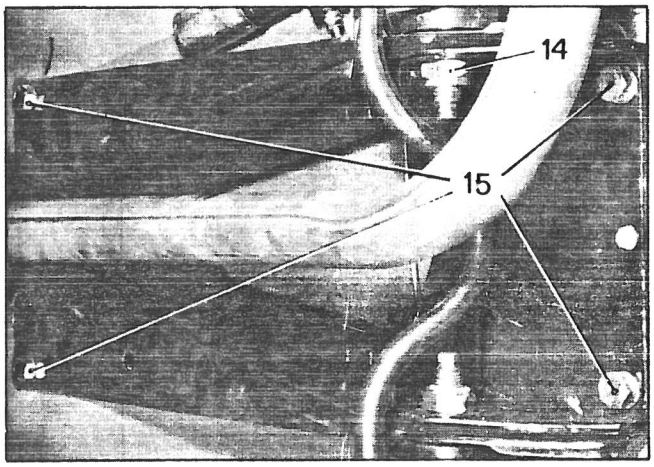

76-580

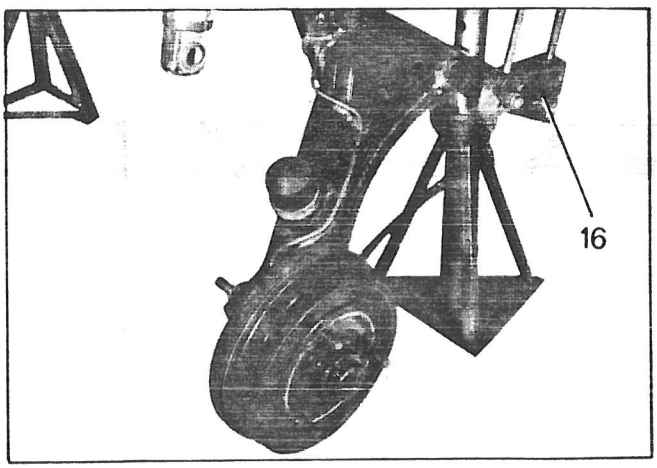

REMOVING AND FITTING A REAR WHEELARM

REMOVAL.

1. Remove :
- the front right hand seat with its runner,
- the seat belt mounting bolts (1),
- the plastic covers (2),
- the nuts (3) *(on removal side)*, and slacken **without removing** the nuts *on the opposite side*.

2. Remove the handbrake lever (4) to release cable (5) *(removal side)*.

3. To hoist up the rear of the vehicle :

Engage crossmember 8.1509-T in the anchoring lugs (6).

No other point should be used.

Pin the crossmember at « a ».

4. Fit the axle stands under side stiffeners « b ».

No other point should be used.

5. Remove :
- the wheel on the removal side,
- the anti-roll bar mounting plates (8) and bolts (11) on both sides.

Remove the bar (7).

6. On the removal side :

Remove :
- the locking bolt (9), the nut (10) and disengage the shock absorber,
- the nut (14) and **on each arm, slacken off** the other swivel pin nuts.

Extract the handbrake cable (12).

Uncouple the brake pipe hose and blank the piping (13).

7. Remove the central support mounting bolts (15).

8. Release the lateral support (16) and remove the wheelarm.

FITTING

9. Engage the wheelarm into its mountings, fit the new Nylstop nuts (3) on the lateral support *(flat washers)*. Tighten both sides to a torque of **4 to 5 m.daN.**

10. Put on the new Nylstop nut (1) but do not tighten.
Provisionally tighten the central support bolts (2).

11. Connect up the suspension unit to the arm (use flat washers (3)).
Tighten nut (4) home but do not lock.

12. Connect up the brake hose (6).
Thread the handbrake cable (7) into its hose (5).
Hook the cable (9) onto the compensator and fit the handbrake lever (8).

13. Fit the anti-roll bar (10) above the exhaust pipe.
- position the fixing plates (12), and fit the washers and bolts (11) on both sides.

Tighten to : **3 to 4 m.daN.**

14. Fit the wheel and lift the vehicle on a car hoist or over a pit.

15. Using tool [4028-T] , compress the suspension to obtain dimension **« h » of 196 mm.**

15. Tighten :
- *On both sides :* the swivel pin nuts (1) to : **7 to 8 m.daN** using spanner [K]
- the damper fork nut (4), **3 to 4 m.daN,**
- the locking bolt (13) to : **3.5 to 4 m.daN.**

17. Release the suspension.

18. Adjust rear wheel alignment.
After setting, tighten the two central support bolts (2), **4 to 5 m.daN.**

19. Bleed the rear brakes.
(See Op. VD. 453-0).

20. Adjust the handbrake cable *(if necessary).*

21. Fit :
- the plastic covers (15),
- the seat belts,
  Tighten bolt (14) to : **3 m.daN.**
- the right hand front seat.

78-731

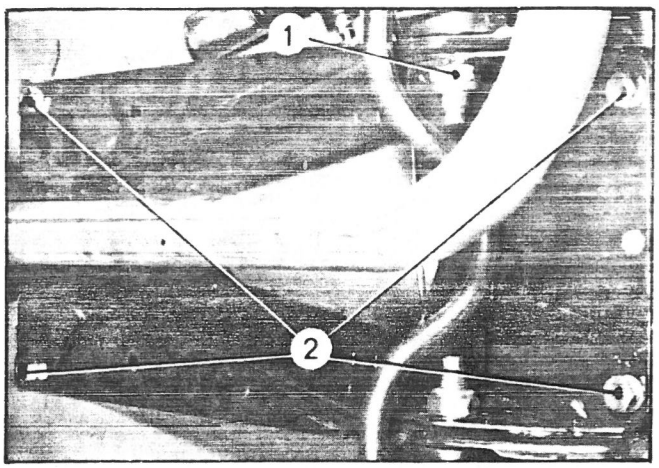

76-573

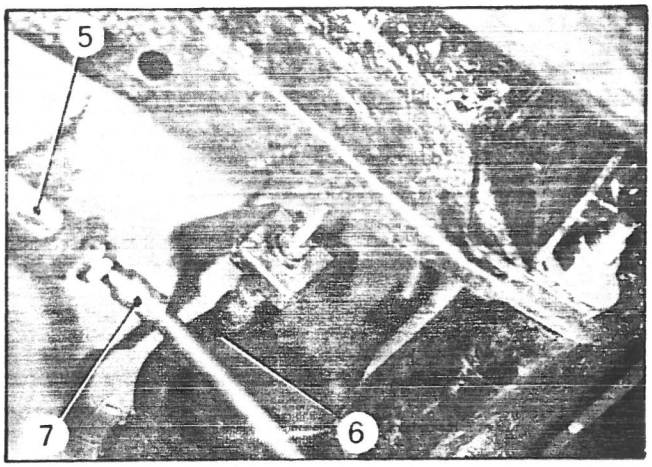

76-584

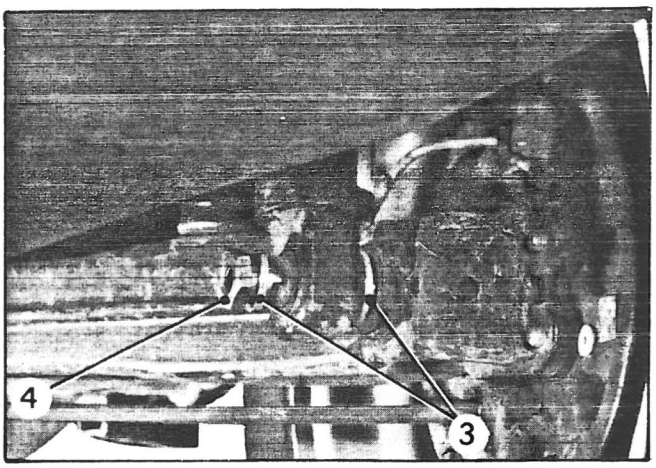

78-594

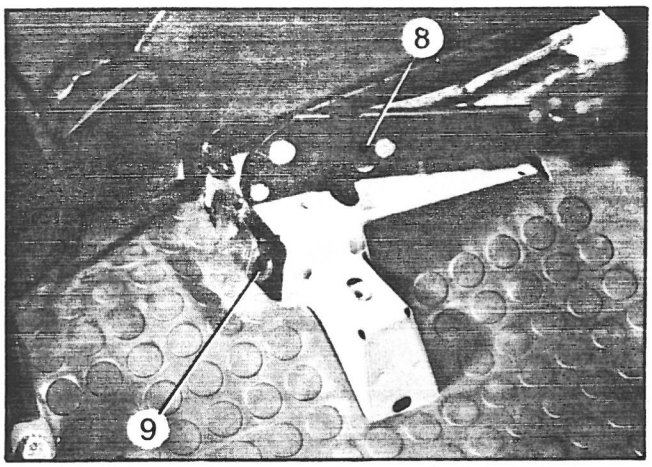

78-597

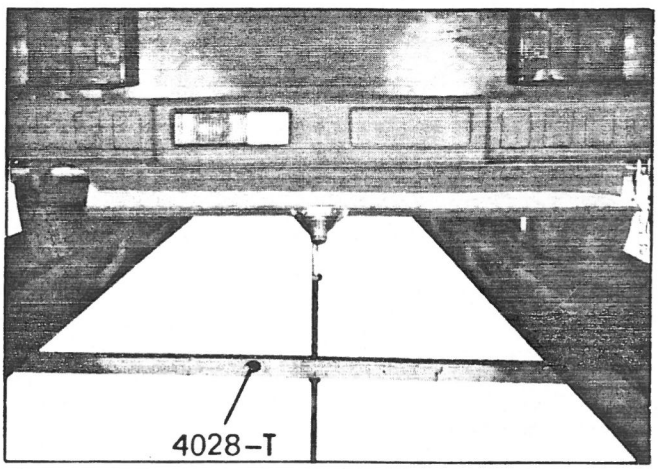

76-693

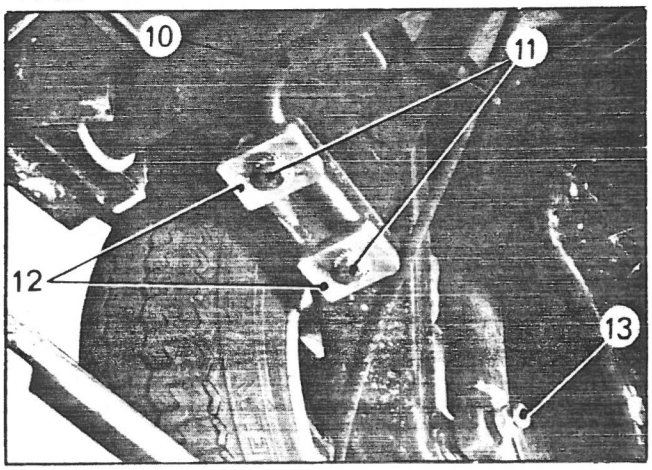

76-583

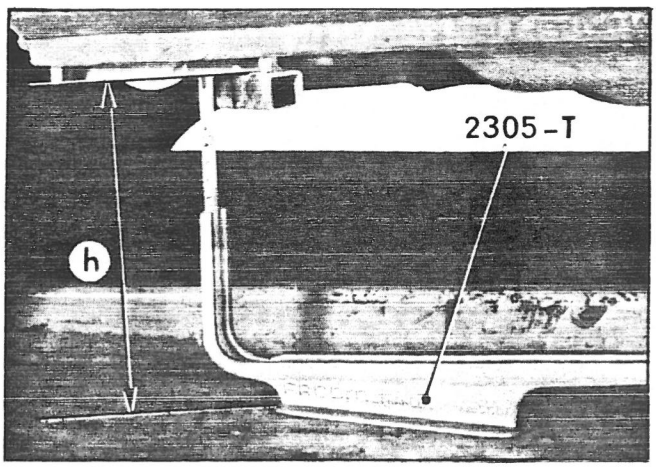

78-596

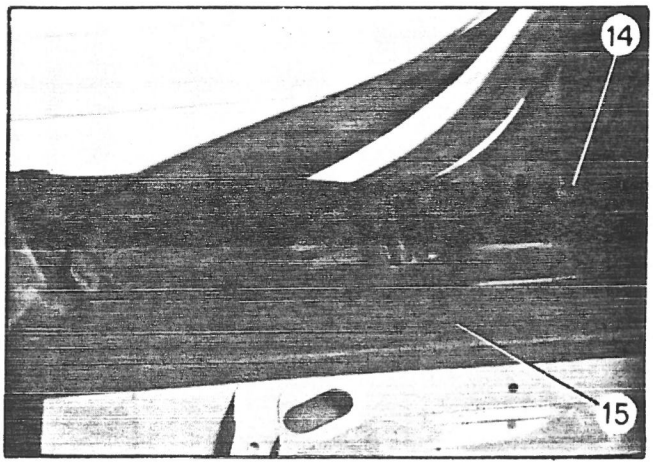

OPERATION
VD2. 442-1

REMOVING AND FITTING A STEERING UNIT

SPECIAL TOOLING

TOOL SOLD

1892-T bis : Ball-joint extractor

TIGHTENING TORQUES

Compulsory tightening torques *(torque wrench) :*

Tightening point	Torque in m.daN
Rack housing mounting bolts	3 to 4
Link rod ball-joint Nylstop nut	3 to 4
Link rod to rack mounting *(retaining washer)*	4.5 to 5.5
Steering joint coupling bolt	1.25 to 1.75
Alignment setting locknut	4 to 5
Gear control return lever pin bolt	1 to 1.5

13.549

1892-T.bis

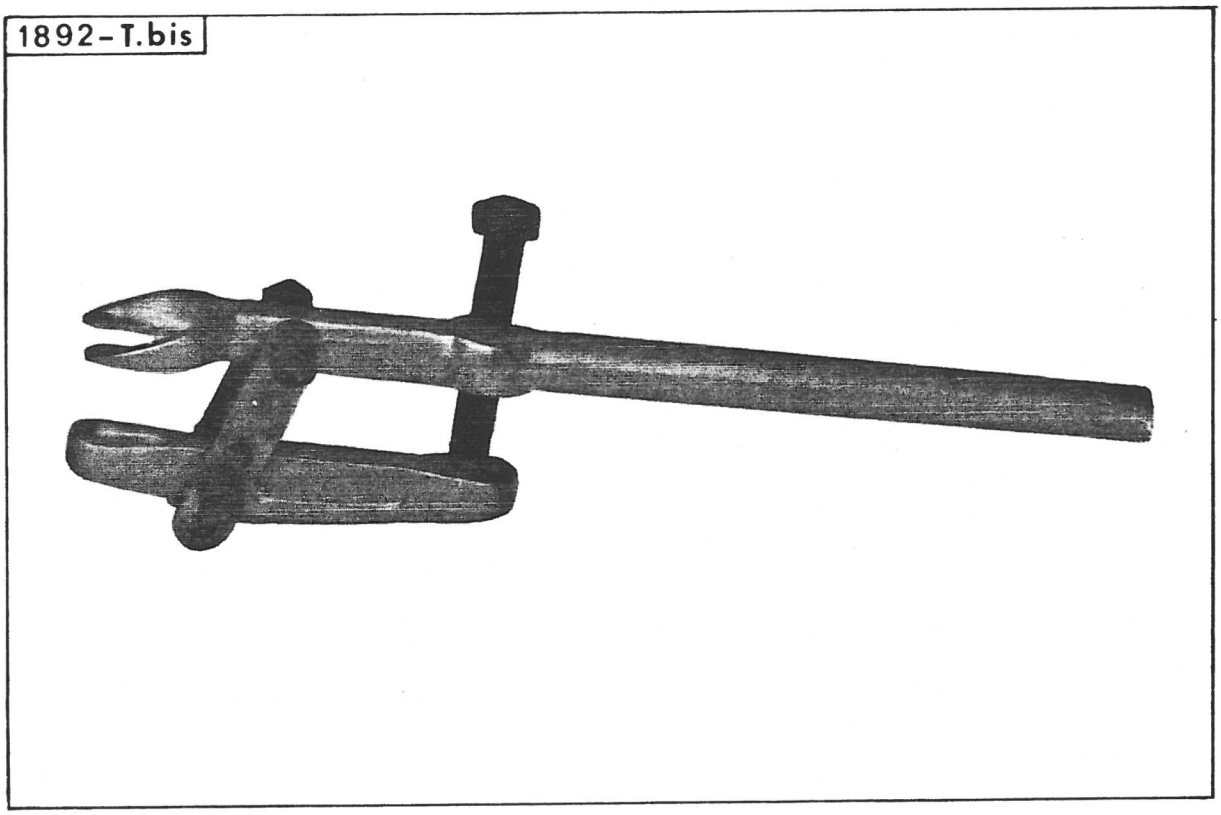

78-694

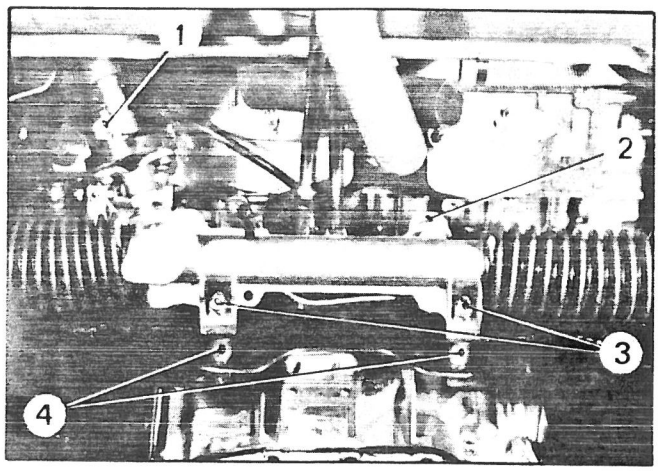

78-692

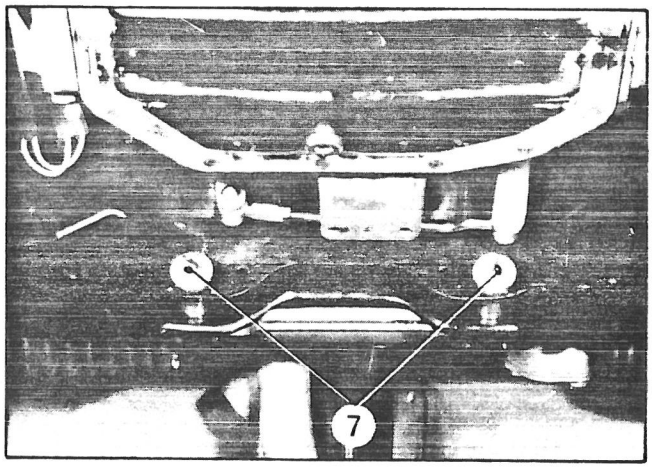

78-165

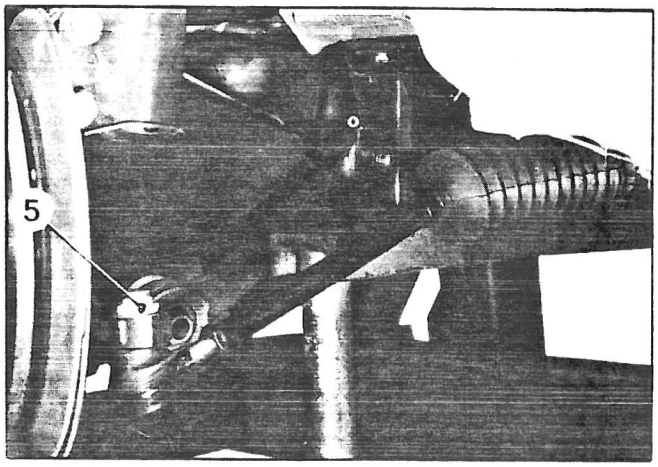

78-753

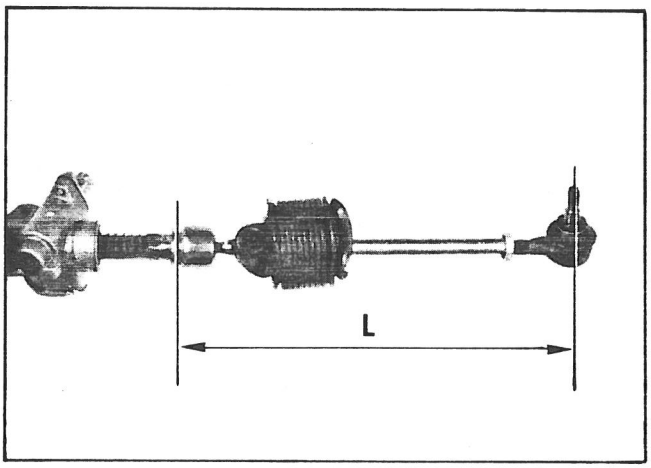

76-607

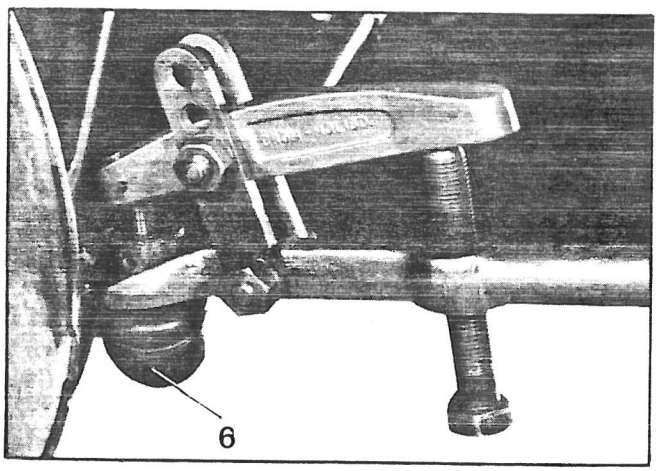

78-780

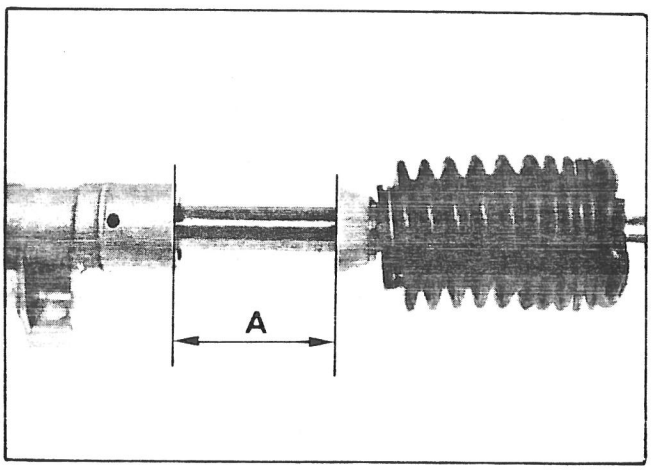

REMOVING AND FITTING A STEERING SYSTEM

REMOVAL.

NOTE : Engage first gear in order to disengage the rack housing left hand side mounting.

1. Remove :
- the steering flexible coupling upper screw (1),
- the gear control return lever pin-bolt (2),
- the link rod ball-joint Nylstop nuts (5).

2. Disconnect the link rod ball-joint (6), from the pins : extractor **1892-T bis**

Ensure that the extractor is correctly positioned in order to prevent damaging the ball-joint protective rubber.

3. Remove the two mounting (7) and recover the spacers (4).

4. Disconnect the steering system.

NOTE : When changing the link rod, use : « L » = 316.44 mm as an approximate alignment.

FITTING.

Set the steering with **A = 74 mm** to obtain the straight line position.

5. Offer up the steering system by engaging the steering column drive-shaft into the steering flexible coupling, with the steering wheel spoke facing downwards.

6. Fit spacers (4), bolts (7), (flat washer under bolt head) **and tighten to 3 - 4 m.daN (new Nylstop nuts)** *(torque wrench).*

7. Tighten the flexible coupling screw (1) **(new Nylstop nut) to : 1.25 to 1.75 m.daN** *(torque wrench).*
Position the gear control return lever and tighten mounting bolt (2) to : **1 to 1.5 m.daN.**
Fit the nylon plug.

8. Couple up the link rods to the swivels *(ball-joint cones de-greased)* **(new Nylstop nuts (5), torque 3 to 4 m.daN)** *(torque wrench).* Check that the ball-joint cover is in perfect condition.

9. Adjust wheel alignment.

LIST OF OPERATIONS IN SECTION III

Operation number	DESCRIPTION
	RECONDITIONING
	VD - ALL TYPES
VD. 416-3	Reconditioning a front hub
VD. 426-3	Reconditioning a rear hub
VD. 433-3	Working on a rear suspension arm
	VD1
VD1. 100-3	Reconditioning an engine
VD1. 330-3	Reconditioning a gearbox
VD1. 434-3 a	Reconditioning a front suspension unit
VD1. 434-3 b	Reconditioning a rear suspension unit
	VD2
VD2. 100-3	Reconditioning an engine
VD2. 315-3	Working on the transfer gear assembly I. Replacement of ball bearing or shaft II. Replacement of an intermediate gear needle bearing cage III. Replacement of an engine shaft seal
VD2. 330-3	Reconditioning a gearbox
VD2. 434-3 a	Reconditioning a front suspension unit
VD2. 434-3 b	Reconditioning a rear suspension unit

RECONDITIONING

Operations in common : VD1/VD2

VD. 416-3 : Reconditioning a front hub

VD. 426-3 : Reconditoning a rear hub

VD. 433-3 : Working on a rear suspension arm

OPERATION
VD. 416-3

RECONDITIONING A FRONT HUB

SPECIAL TOOLING

TOOLS SOLD

KIT 8.0613-T

B 1 : Bolt
B 2 : Nut
B 3 : Thrust pad
B 4 : Extractor
B 5 : Thrust cup
B 6 : Bearing securing end-piece
B 7 : Inner seal securing end-piece

TIGHTENING TORQUES

Compulsory tightening torques *(torque wrench) :*

Tightening point	Torque in m.daN
Brake disc mounting bolts coated with LOCTITE FRENETANCH *(serrated washers)*	5 to 6

76-365

B1



76-366

B5



76-365

B2

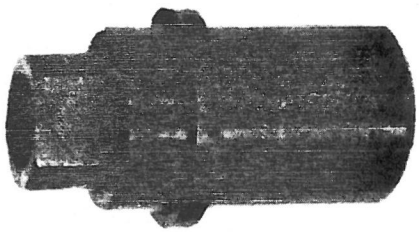

76-366

B6

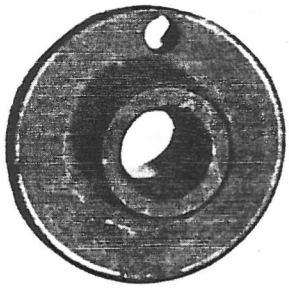

76-365

B3



76-366

B7

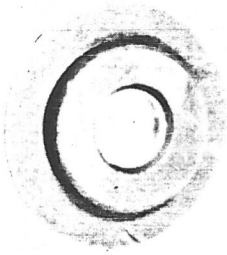

76-365

B4



78-539

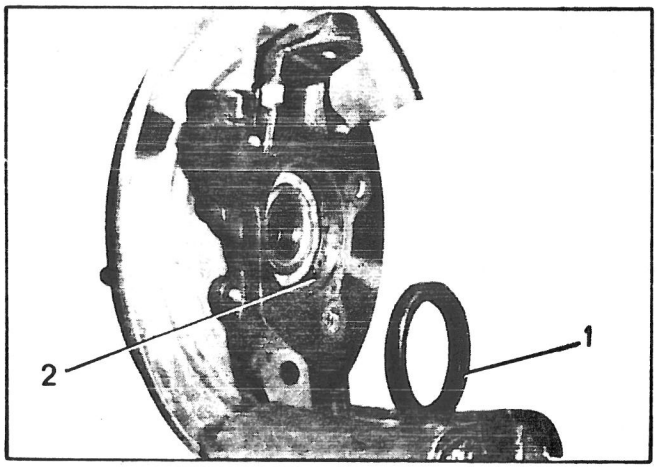

76-354

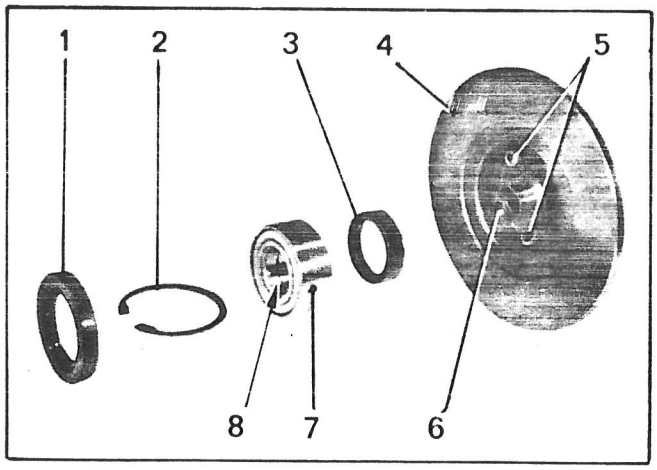

78-540

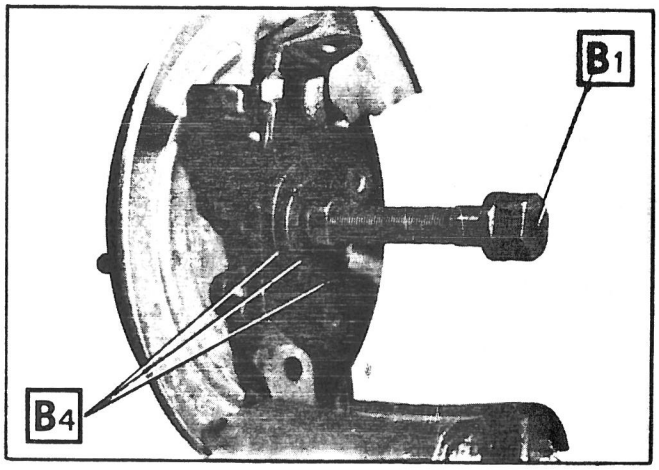

78-541

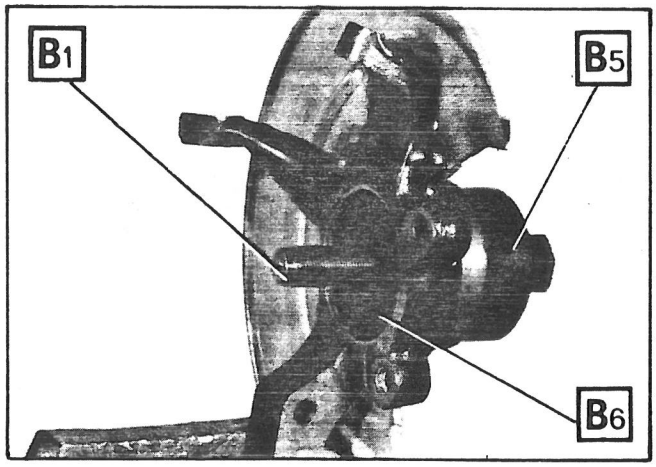

78-536

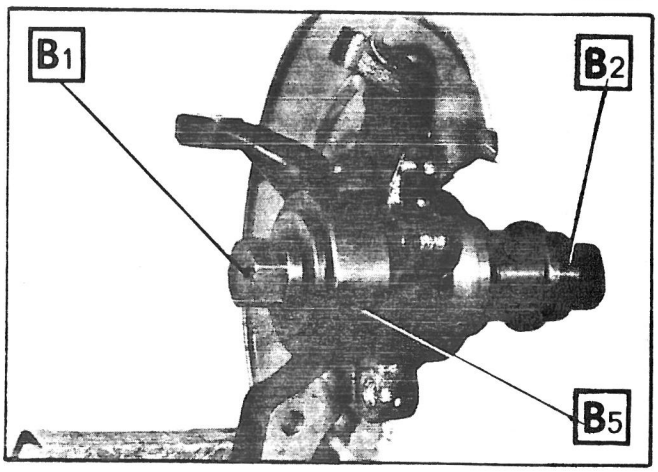

78-538

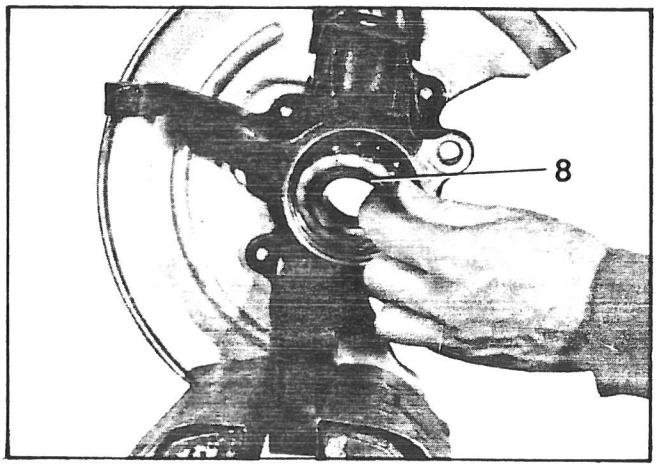

78-544

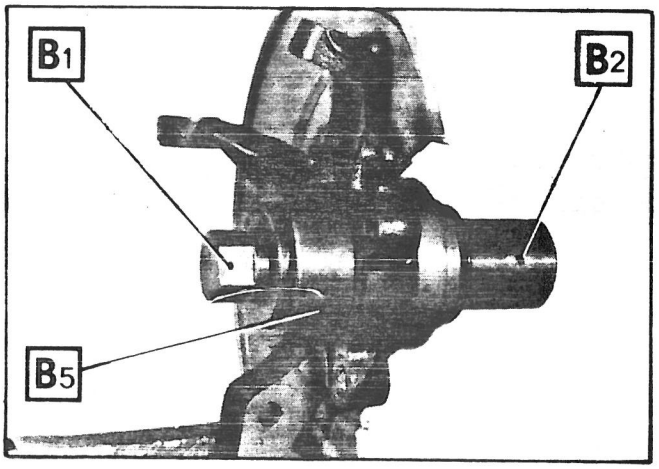

78-542

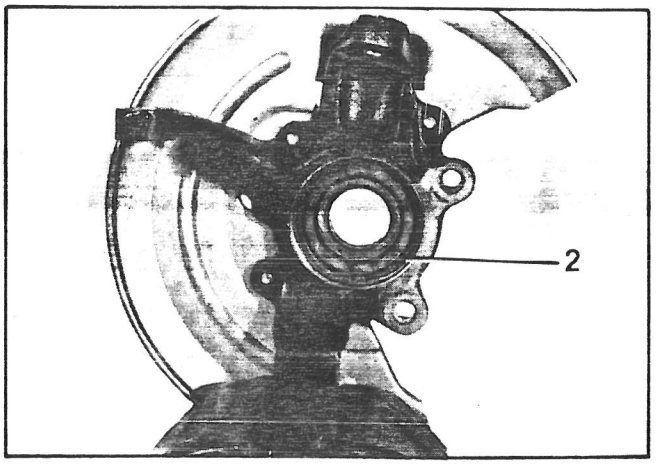

RECONDITIONING A FRONT HUB

NOTE :
This operation may also be carried out on the vehicle without removing the hub.
In this case, disconnect :
- the drive-shaft,
- the brake caliper, and suspend *without opening the hydraulic circuit.*

REMOVAL

1. Fit the hub into a vice and remove :
- the seal (1),
- the circlips (2).

2. Remove the brake disc-hub assembly.

(Extractor B4 and bolt B1 pad B3 up against the hub).

3. Remove the hub bearing (bolt B1, thrust cup B5, nut B2)

4. Remove the seal (3) (bolt B1 thrust cup B5 nut B2)

5. Remove the brake disc (4).

ASSEMBLY

6. Systematically fit new seals (1) and (3).
Do not reuse a bent circlip.

7. Connect the disc (4) to the hub (6) **(bolts (5))** coated with LOCTITE FRENETANCH).

8. Fit the bearing (7) without its inner ball race (8) (bolt B1 , cup B5 , bearing securing endpiece B6 ,
Tighten home.

9. Fit the inner ball race (8).

10. Fit the circlip (2), and check that it is correctly located in its groove.

11. Simultaneously fit seals (1) and (2) with lips « a » and » b towards the inside (bolt B1 , nut B2 , seal securing endpiece B7)
Tighten home.

12. Fit the disc brake-hub assembly (3) onto the pin (bolt B1 , nut B2)
Tighten home.

41-1a

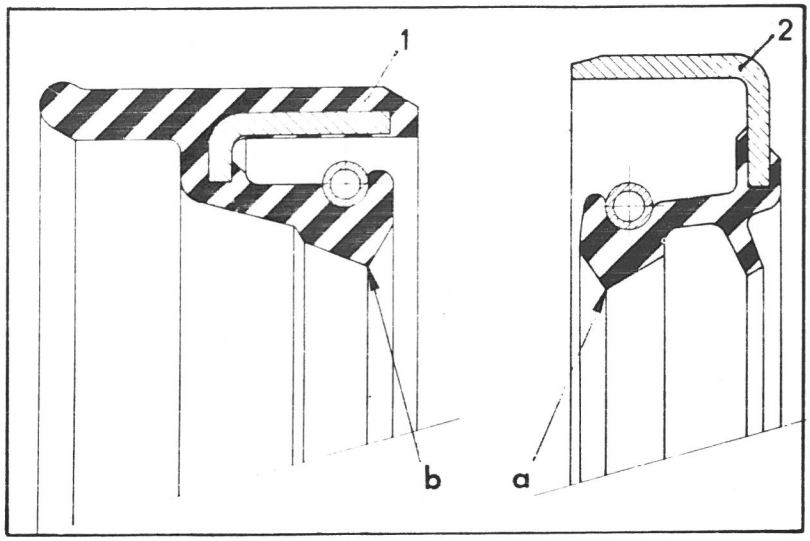

78-537

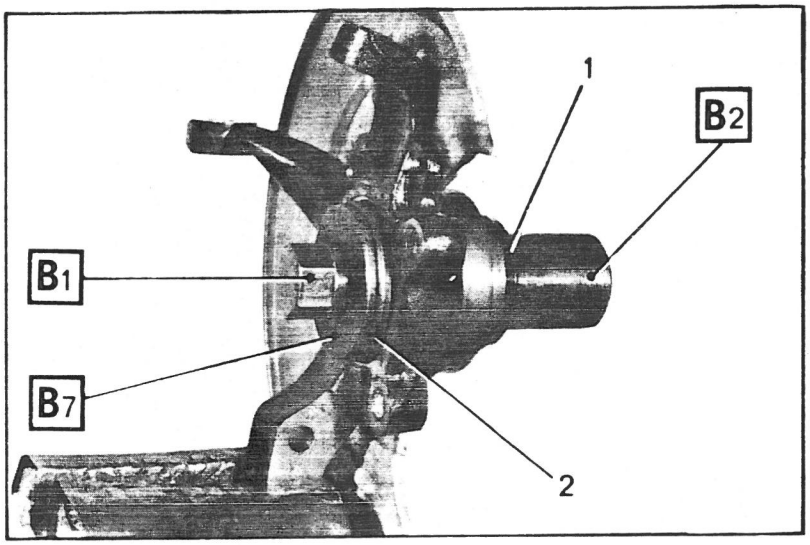

78-543

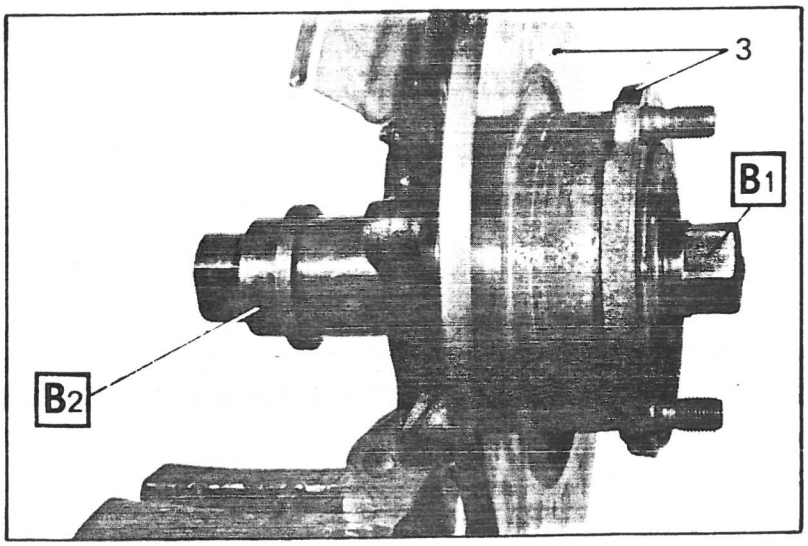

OPERATION
VD. 426-3

RECONDITIONING A REAR HUB

SPECIAL TOOLING

TOOLS SOLD

KIT 8.0526-T

A : Center bolt

B : Mandrel

C : Spacer

D : Spacer

E : Inner bearing extractor

F : Outer bearing extractor

G : Seal support and bearing cup assembly washer

76-706

A



76-706

B

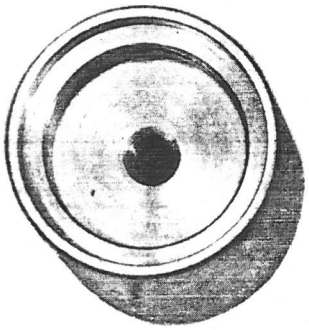

76-706

C

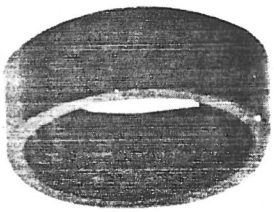

76-706

D

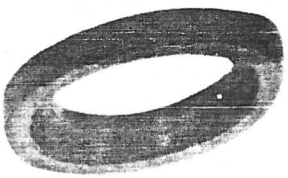

76-706

E



76-706

F



76-706

G



76-783

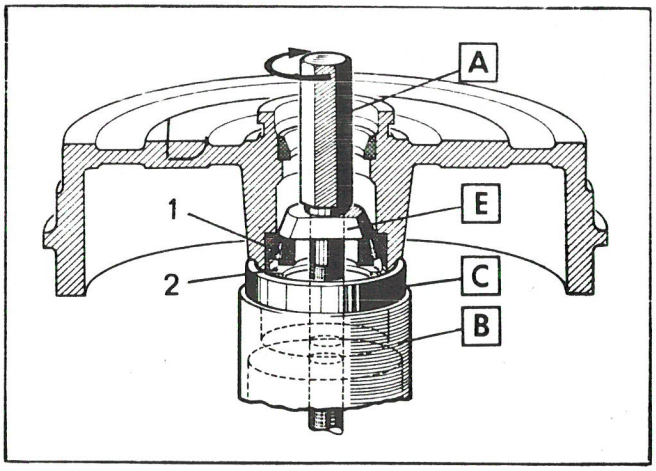

76-786

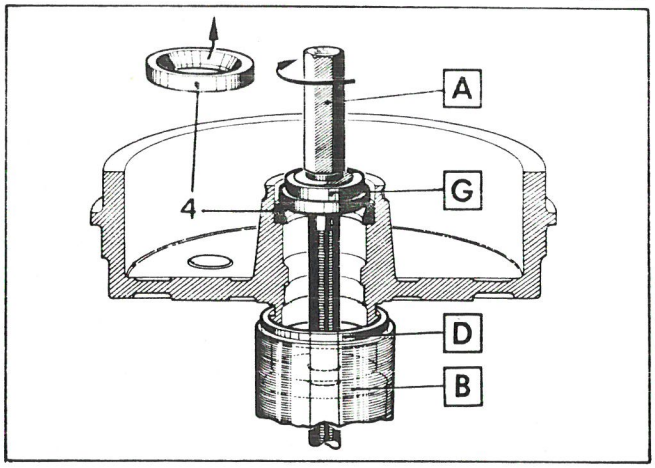

76-782

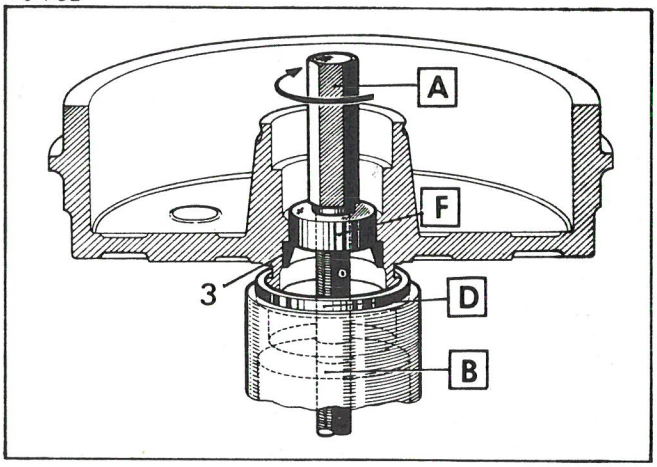

76-784

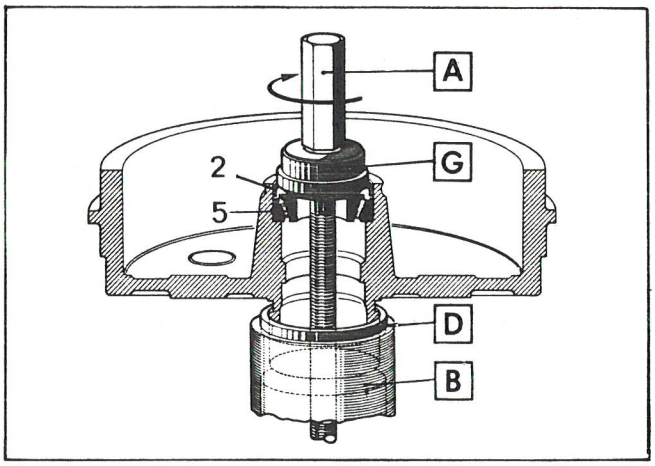

76-787

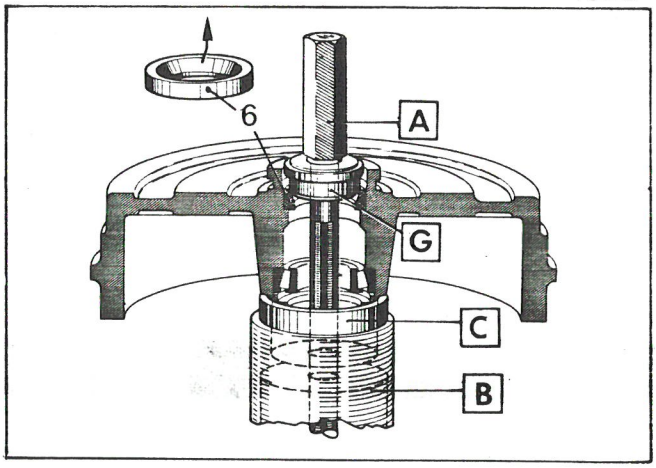

REMOVAL.

1. Remove the inner bearing (1) and the support cup (2).

(Bolt [A] , extractor [E] , spacer [C] , mandrel [B])

2. To remove the outer bearing :

Remove :
- the race (3) (bolt [A] , extractor [F] , washer [D] , mandrel [B])

ASSEMBLY

Systematically replace the seal thrust cup (2).

3. To fit the inner bearing (1) on the thrust cup (2) :

- Tighten bolt [A] until the outer race (4) is home in its housing.
- Check that race is correctly fitted by tightening bolt [A] to **6 m.daN.**
- Fit the inner race (5) greased with TOTAL MULTIS MS.
- Fit the thrust cup (2).
- Tighten bolt [A] home, without forcing it.

4. To fit the outer bearing :

- Tighten bolt [A] until the outer race (6) is home in its housing.
  Check that race is correctly fitted by tightening bolt [A] to **6 m.daN.**

OPERATION
VD. 433-3

WORKING ON A REAR SUSPENSION ARM

SPECIAL TOOLING

TOOLS SOLD

8.0909-T : Rear arm shaft extractor

comprising :

A : Bolt

B : Nut

C : Bronze washer

Kit 8.0908-T

comprising :

L : Adapter

M : Spacer tube

N : Thrust washer

76-1011

8.0909-T

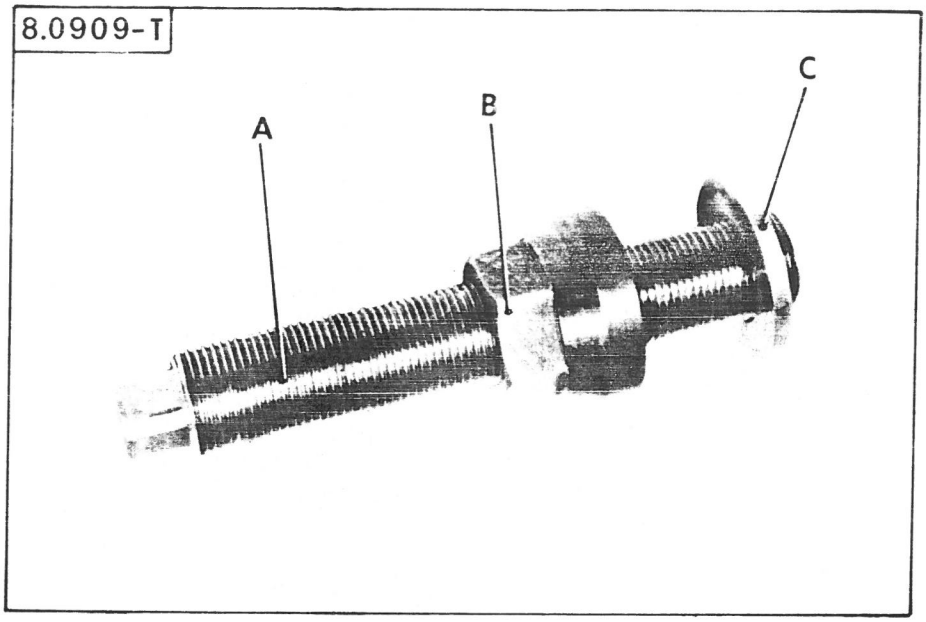

76-1010

L 80908-T

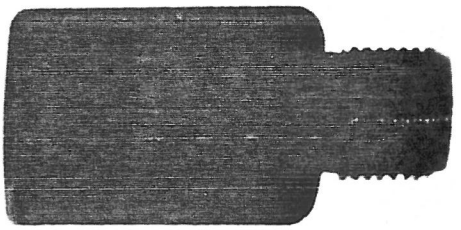

76-1010

M 80908-T

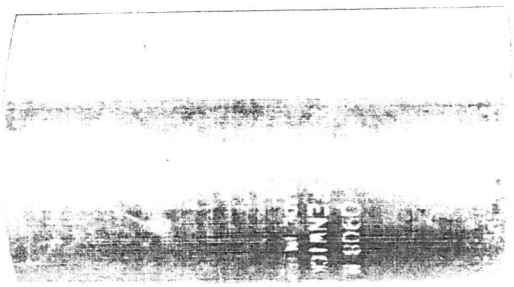

76-1010

N 80908-T

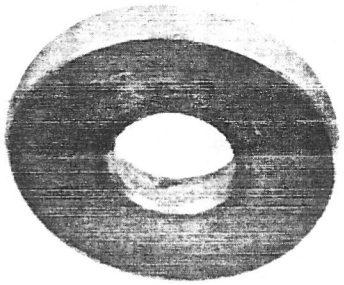

76-1009

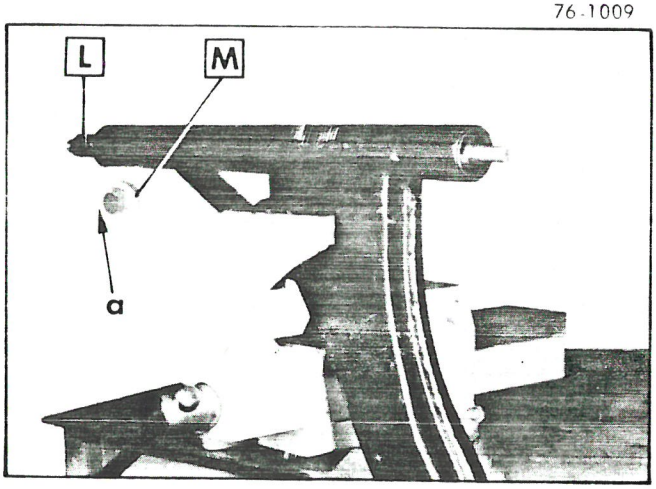

76-1005

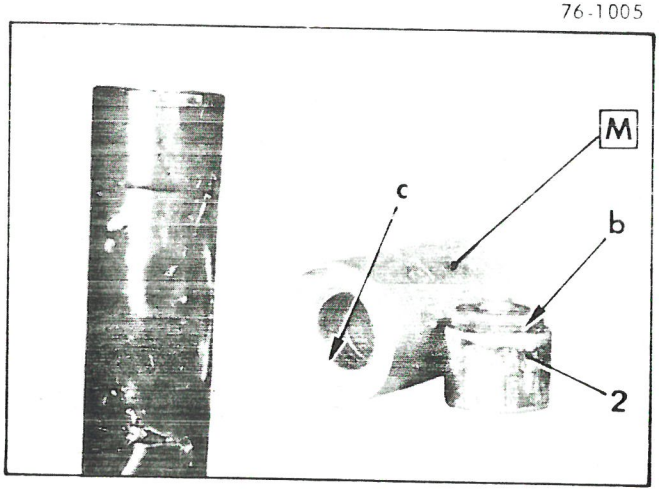

76-1007

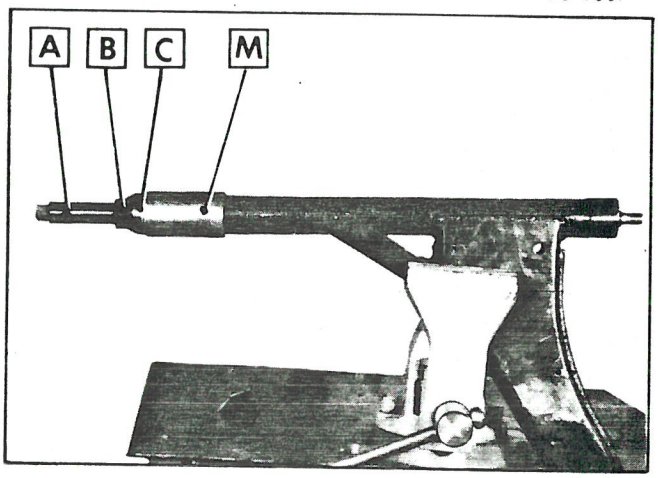

76-1013

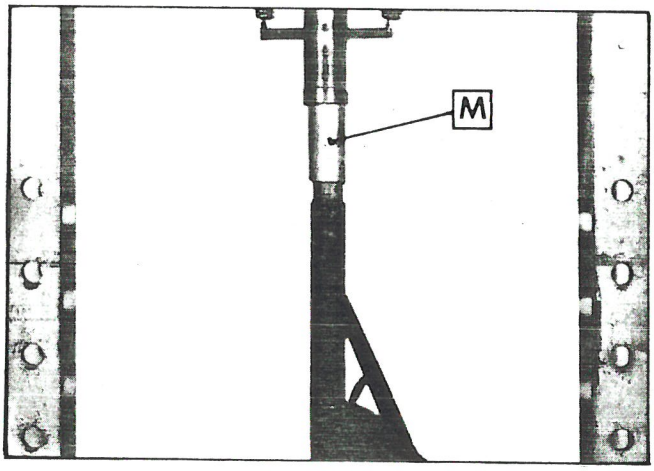

76-1006

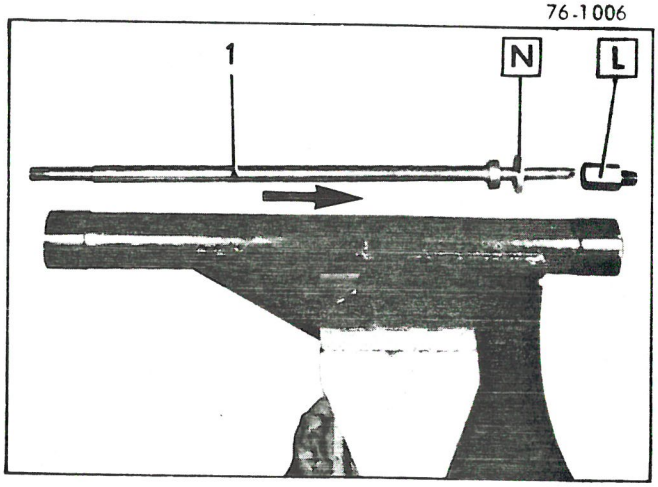

76-1012

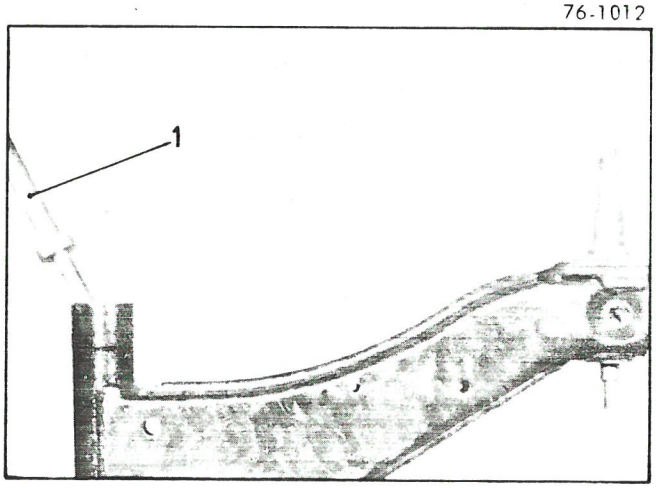

76-1008

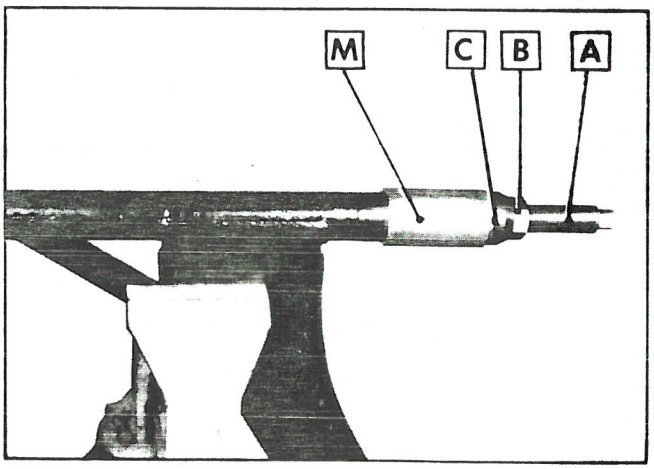

76-1014

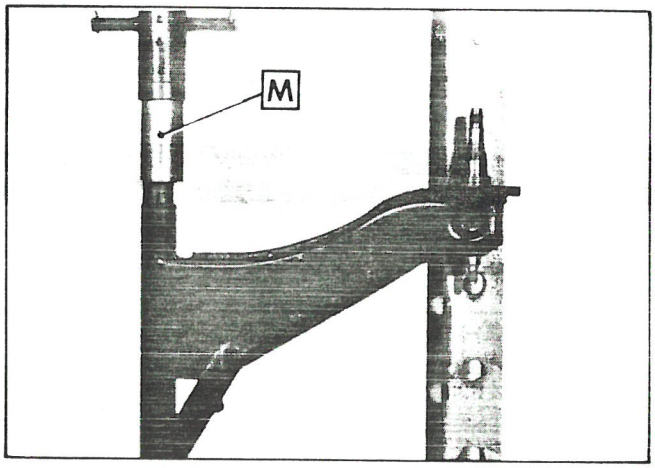

REPLACEMENT OF THE FLEXIBLE ARTICULATIONS

REMOVAL

1. To remove the inner articulation : put the arm in a vice.

Fit adapter [L] to the rear arm shaft (inside).

Install in the following order :

- the spacer tube [M] with the deepest shouldering end « a » on the rear arm tube,
- the bronze washer [C]
- nut [B] and bolt [A] screwed onto the adapter [L]

Tighten nut [B] while holding bolt [A] to extract the articulation.

2. Removal of the outer articulation :

> The outer articulation can only be changed if the inner articulation is removed.

Put thrust washer [N] on shaft (1).

Insert the shaft (1) and thrust washer [N] assembly into the arm (➔).

Fit adapter [L] to shaft (1).

Fit in the following order :

- spacer tube [M] ,the deepest shouldering end « a » on the rear arm tube.
- bronze washer [C]
- nut [B] and bolt [A] screwed onto adapter [L])

Tighten nut [B] while holding [A] to extract the articulation.

FITTING

3. Fitting the inner articulation :

Grease the articulation housing (2).

Position the articulation (2) on the rear arm tube (part « b » to the outside of the arm).

Put the spacer tube [M] with the shallower shouldering « c » on the end of the rear arm tube.

Using a press, push in the articulation until it comes into contact with spacer [M] on the arm tube flange.

4. Fitting the outer articulation :

Fit the arm articulation shaft via the outside of the rear arm tube.

Grease the articulation housing.

Insert the outer articulation on the tube.

Fit spacer tube [M] with shallow shouldering end « c » on the arm tube.

Using a press, fit the articulation until it touches spacer [M] on the flange.

LIST OF VD1 OPERATIONS IN SECTION III

Operation number	DESCRIPTION
	RECONDITIONING
VD1. 100-3	Reconditioning an engine
VD1. 330-3	Reconditioning a gearbox
VD1. 434-3 a	Reconditioning a front suspension unit
VD1. 434-3 b	Reconditioning a rear suspension unit

OPERATION
VD1. 100-3

RECONDITIONING AN ENGINE

SPECIAL TOOLING

TOOLS SOLD

2437-T : Dial gauge

1651-T : Dial gauge support rule

1671-T : Crankshaft self-lubricating bush extractor

1713-T : Mandrel for centering clutch disc

3052-T : Mandrel for fitting the crankshaft self-lubricating bush

4038-T : Fan extractor bolt

4007-T : Piston ring fitting fixture

4024-T : Valve spring compressor

4037-T : Rear bearing seal fitting tool

6002-T : Spanner for fitting and removing the oil cartridge

12608

1651-T 2437-T

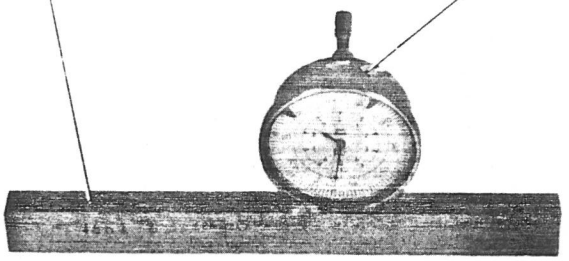

76-923

1671-T

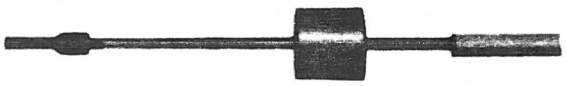

12694

1713-T

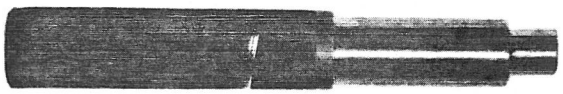

76-923

3052-T



78-128

4038-T



76-949

4007-T



76-949

4024-T

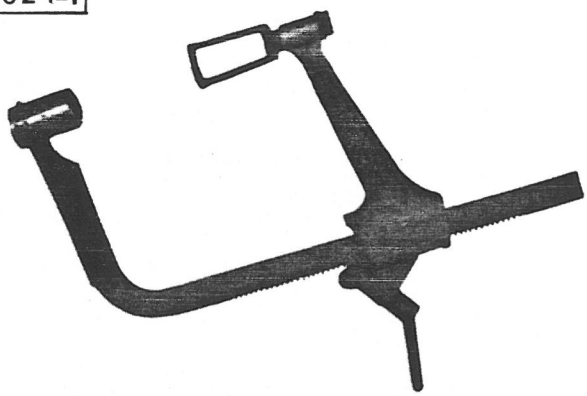

78-45

4037-T

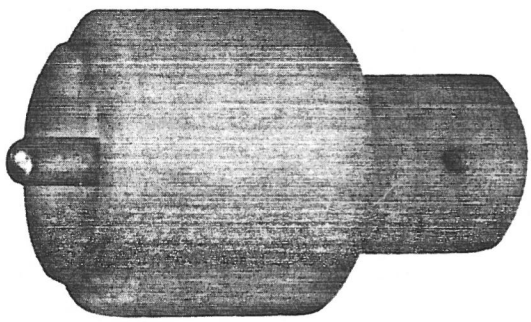

1.-739

6002-T

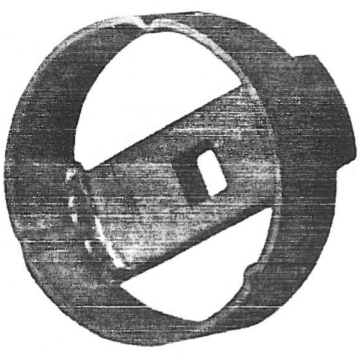

12694

MR.630-31/69

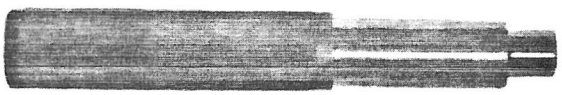

76-927

MR.630-43/40

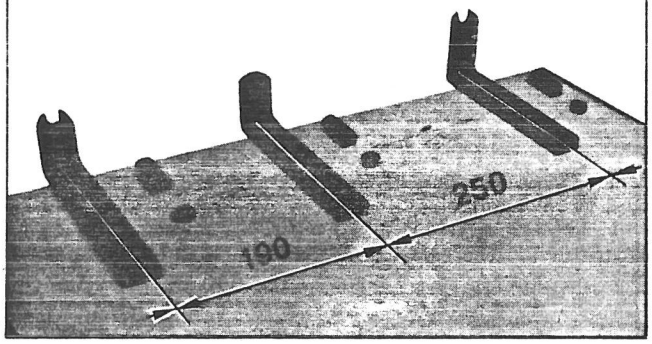

76-960

MR.630-43/4

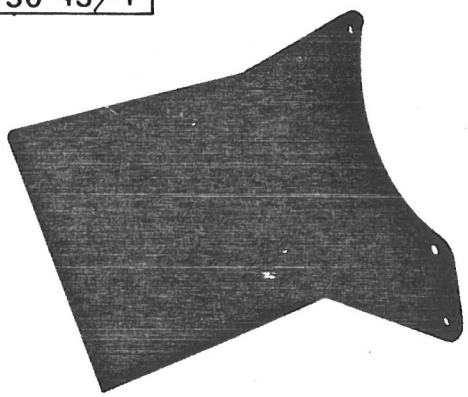

78-44

MR.630-11/18

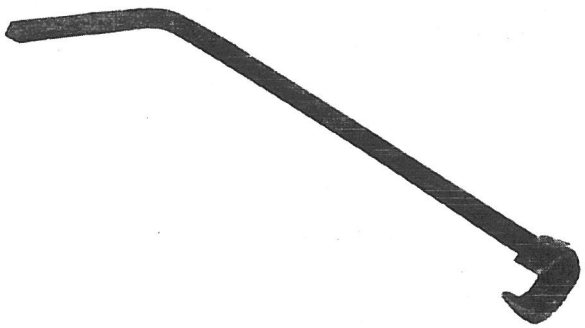

76-962

MR.630-43/15

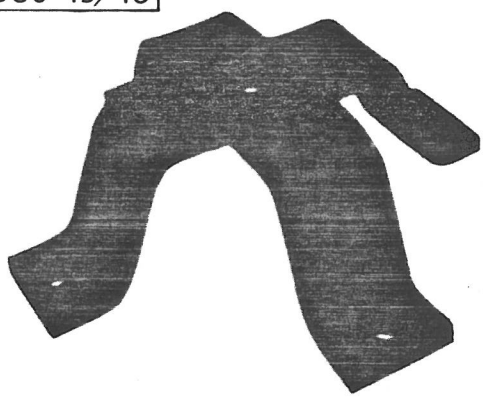

SPECIAL TOOLING

TOOLS NOT SOLD

MR. 630-31/69 : Mandrel for centering the clutch disc

MR. 630-43/4 : Engine bracket on workbench

MR. 630-43/15 : Stand for bracket MR. 630-43/4

MR. 630-43/40 : Engine bracket, simplified mounting

MR. 630-11/18 : Spanner for removing and fitting the oil cooler

TIGHTENING TORQUES

Recommended tightening torques :

- Engine front bearing bolt *(face and threads oiled)* : ..... 1.6 to 1.8 m.daN
- Engine bearing bolt, except for front bearing *(face and threads oiled)* : ..... 3.5 to 4 m.daN
- Engine flywheel bolt *(face and threads oiled)* : ..... 8 m.daN
- Relief valve *(face and threads oiled)* : ..... 4.5 m.daN
- Cylinder-head nuts *(oiled and wiped)* : ..... 1.9 m.daN
- Cylinder-head studs on crankcase and cylinder-head cover : ..... 0.4 to 0.6 m.daN
- Oil pipe union bolts *(copper gaskets)* : ..... 1 to 1.3 m.daN
- Oil circuit end-pieces (cooler mounting) *(copper gasket)* : ..... 4.5 m.daN
- Oil cooler union bolt *(seal packing)* : ..... 1.6 to 1.8 m.daN
- Rocker shaft bolts : ..... 2.8 m.daN
- Oil pump cover bolts : ..... 1.3 to 1.5 m.daN
- Pressure switch *(copper gasket)* : ..... 2 to 2.5 m.daN
- Oil circuit plug (flywheel end) *(copper gasket)* : ..... 4 m.daN
- Crankcase bolt, rocker nuts : ..... 1.4 to 1.9 m.daN
- Fan mounting bolt *(lugged contact washer)* : ..... 5 to 6 m.daN
- Cylinder-head cover nut : ..... 0.5 to 0.7 m.daN
- Clutch mechanism bolts : ..... 1 to 1.3 m.daN
- Drain plug *(copper gasket)* : ..... 3.5 to 4.5 m.daN

RECONDITIONING AN ENGINE

REMOVAL

1. Set the engine on the workbench on bracket MR. 630-43/40 or MR. 630-43/4

Remove :
- the fan (4) (use extractor 4038-T),
- the air filter (1) and its support (2),
- the piping (5) with its equipment,
- the clutch (8) and the flywheel (7),
- the oil filter (6), spanner 6002-T
- the cooler panels (9),
- the air intake (3).

2. Remove :
- the breather (11),
- the gauge tube (10),
- the oil cooler (12), spanner MR. 630-11/18
- the petrol pump (13),
- the oil pressure switch and cylinder-head oil pipe (14),
- the rocker covers (15).

3. Remove :
- the cylinder-heads (17),
- the linings (16),
- the tappets.

If the linings and pistons are to be reused, mark the respective piston linings and gudgeon pins.

4. Remove the pistons :
Remove the pin lock ring.
Remove the pin (18).

5. Remove :

On the left hand side :
- bolts (19).

On the right hand side :
- bolts (20) and (21),
- the oil filter support (22).

Lean the engine over at 90° on the right crankcase.

Remove :
- the oil pump plate (23),
- the plug (24), *in order to facilitate cleaning (if necessary),*
- the crankcase mounting bolts.

Remove the LH half-crankcase.

77-644

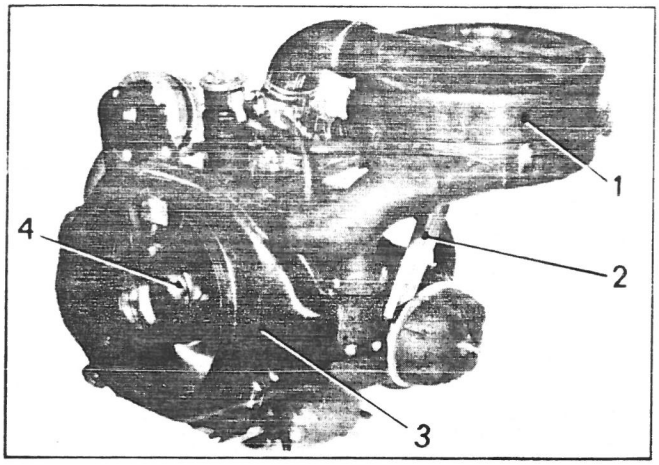

77-645

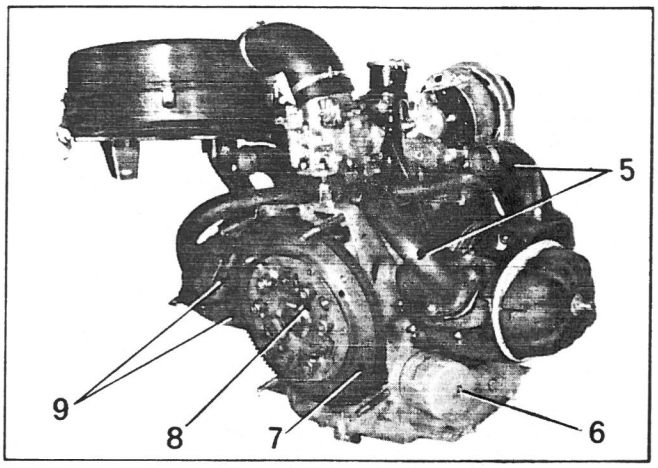

77-648

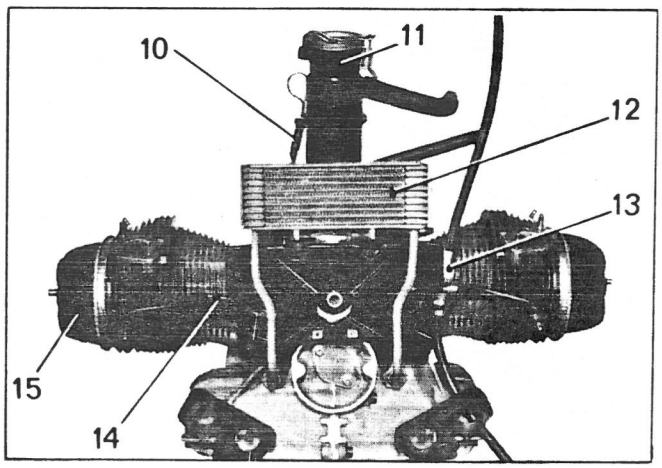

77-647

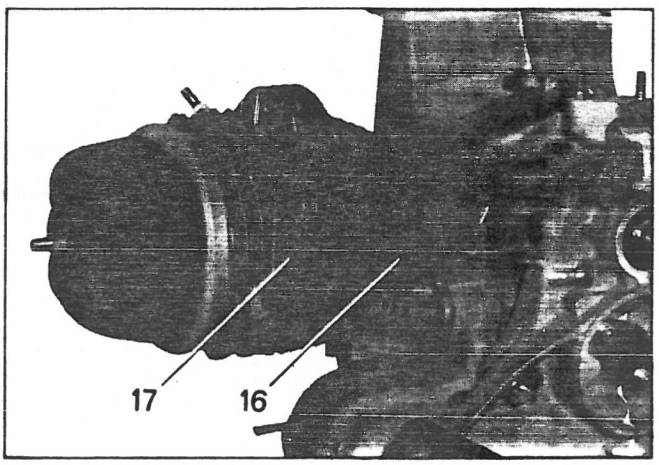

77-649

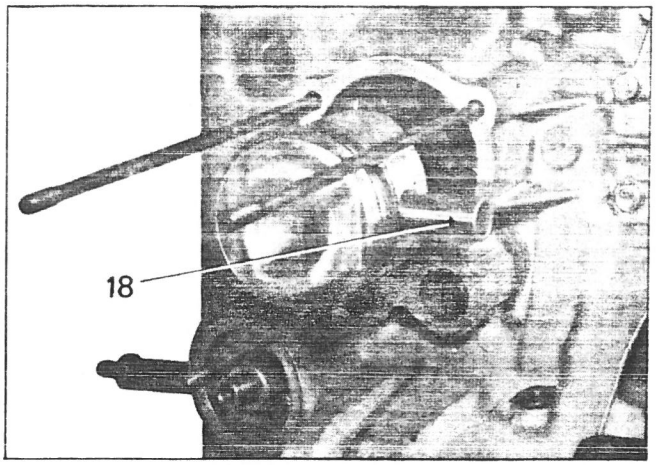

77-650

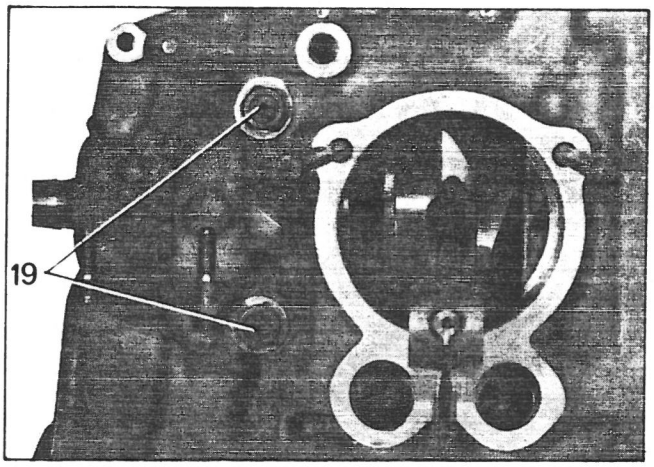

77-651

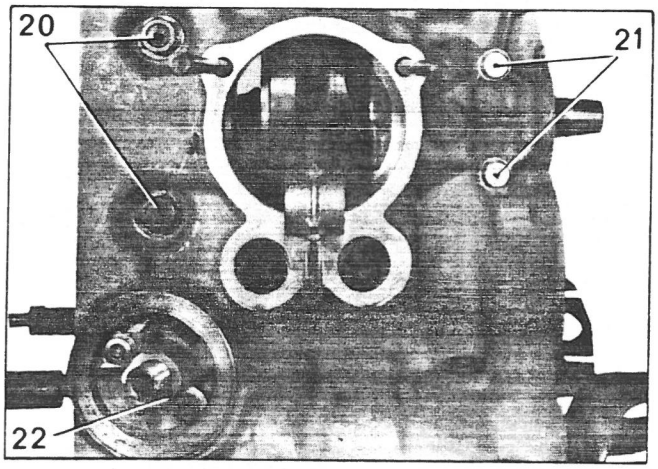

77-671

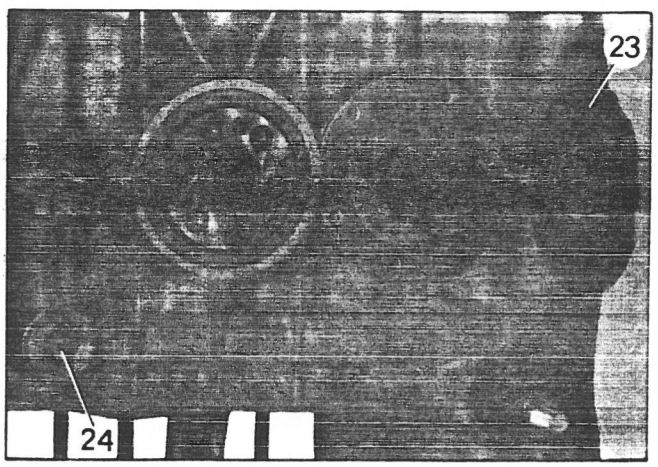

77-670

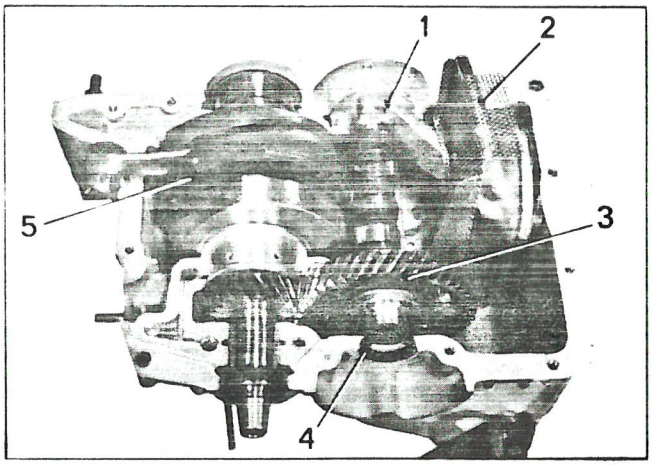

77-778

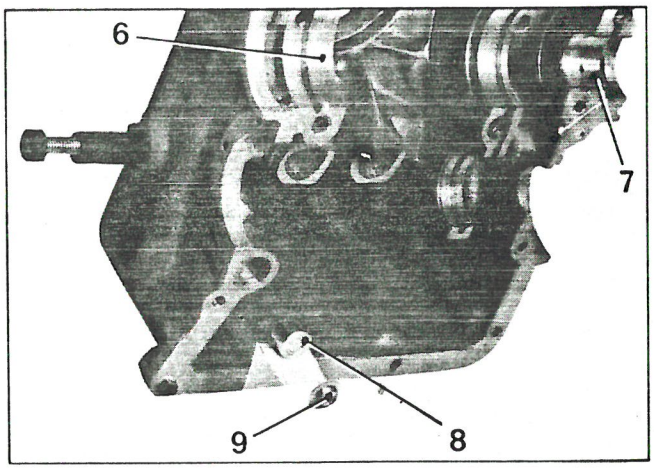

77-779

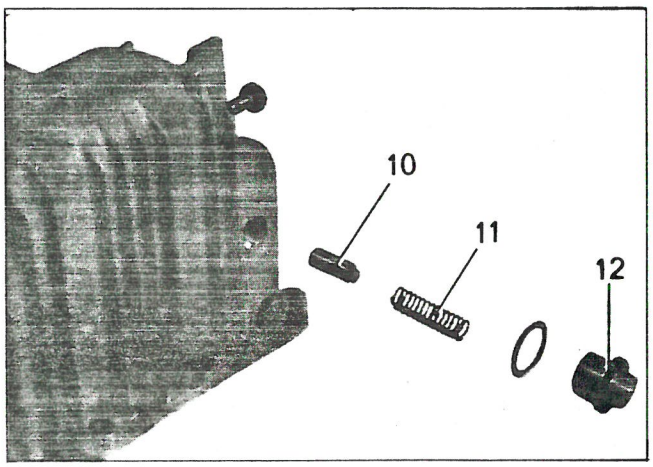

78-01

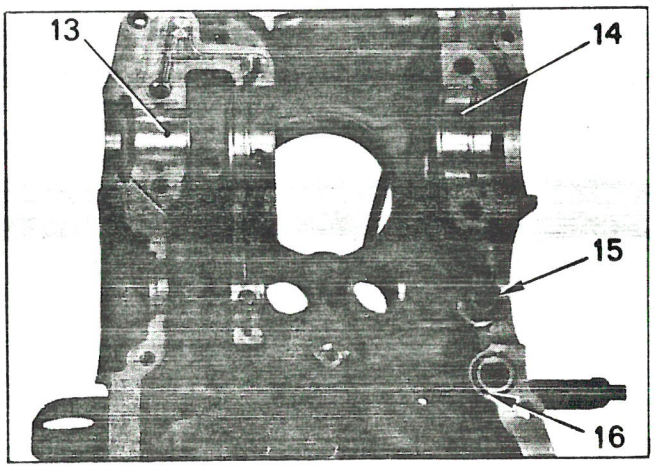

A 12-50 a

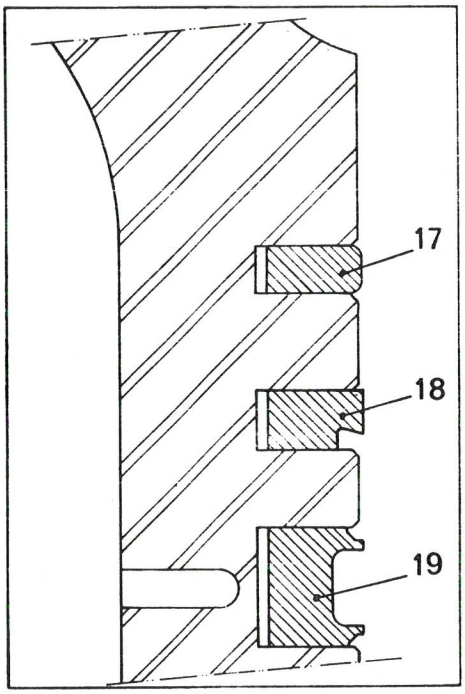

78-05

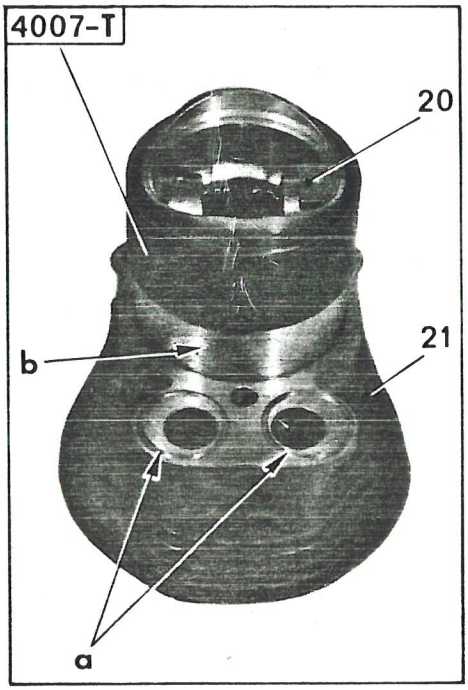

78-01

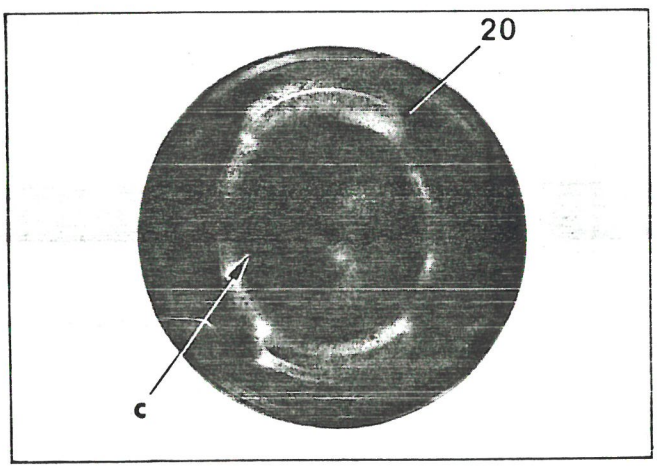

6. Remove :
- the anti-emulsion guard (2),
- the camshaft (3) with the oil pump (1),
- the connecting rod assembly (5).

7. To dismantle the crankcase halves :

LH half-crankcase :
Extract the retaining washer (9) and release the by-pass valve.
Remove :
- the relief valve plug (12), the spring (11) and the valve (10),
- the half-shells (6) and (7).

The RH half-crankcase :
- the seals (4) and (15),
- the O-ring seal (16),
- the half-shells (13) and (14).

8. Clean the parts :

To ensure sealing of the front and rear bearings, the crankshaft has a micro-turbine machined in each seal area. Never use emery cloth on this area, otherwise a leak may be caused.

PREPARATION

9. Prepare the cylinders and pistons :

The cylinders are supplied with matched pistons, pins and rings. Never interchange them.

Fit the piston rings :

The manufacturer's markings should face the top of the piston.

Fit in the following order :
- the collector ring (19),
- the scraper ring (18),
- the top ring (17).

Certain pistons are fitted with « U-FLEX » collector rings.
Prior to fitting, the ring diameters are greater than those of the pistons.

10. Fit a lock ring to the piston.
Oil the cylinder, piston and rings.
Orientate the piston ring gaps at 120°.

Fit assembly tool 4007-T to the bottom of the cylinder (21).
Position the piston (20) in the cylinder (only put the part of the piston fitted with the rings into the cylinder).

The arrow « c » on the piston shows the assembly direction. The mark should be on the timing end.

Fit grooves « a » with new O-rings.
If the cylinder has a groove at « b », fit a new O-ring seal.

11. Prepare the cylinder heads :

a) Remove bolts (7), spanner 1677-T and remove the rocker shafts.

b) **To remove the valves :**
Compress the springs with tool 4024-T
Remove the split collets (8).
Remove the valves and the seals.

c) **To grind in the valves :**
Use the valve grinder 1615-T

Clean carefully. Remove any traces of emery.

d) **To fit the valves :**
Grease the stem and the valve surface (13) and engage it in its guide.
Fit the plastic assembly cap to the end of the stem.
Fit the seal (12) (use clamp A , VISIT 2 reference FLOQUET to complete fitting).
On the end of the valve stem, fit :
- the centering cap (11),
- the spring (10),
- the cup (9),

Compress the spring, using tool 4024-T
Fit the split collets (8).

e) **To fit the rockers :**
Onto each shaft (1) fit :
- the thrust washer (5),
- the spring washer (4),
- the complete rocker (3),
- the spacer (2).

Fit bolt (7) with its *brass* washer (6)
Torque : 2.8 m.daN, spanner 1677-T

f) Fit the O-ring seals (14), *(new)*.

12. Prepare the oil pump :
Check the gear side play.
Use rule 1651-T and comparator 2437-T
or a set of shims.
Free-play : 0.10 mm maximum

13. Prepare the crankcase halves :

RH half-crankcase :
a) Check that the :
- crankshaft ring centering stud (20) is fitted,
- that the camshaft front ring centering stud (18) is fitted,
- that the half-crankcase centering studs (17) are fitted.

b) Fit :
- a *new* seal (15),
- a *new* O-ring seal (16),
- the half-shells (19) and (21).

LH half-crankcase :
c) Fit :
- the by-pass valve (23) and its retaining washer (22),
- the relief valve (27) **with shoulder « a » on the outside** and spring (26).

Fit plug (24) and its *copper* seal (25).
Torque : 4.5 m.daN.

76-818

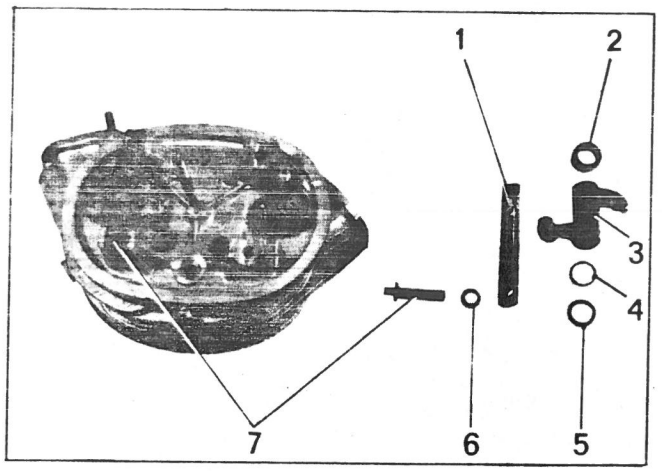

78-36

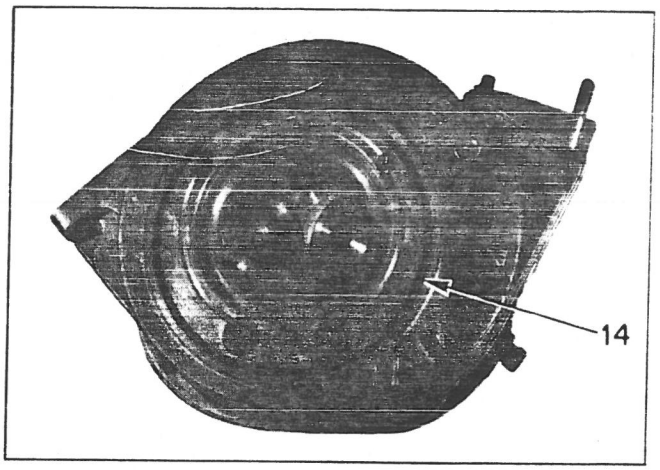

76-817

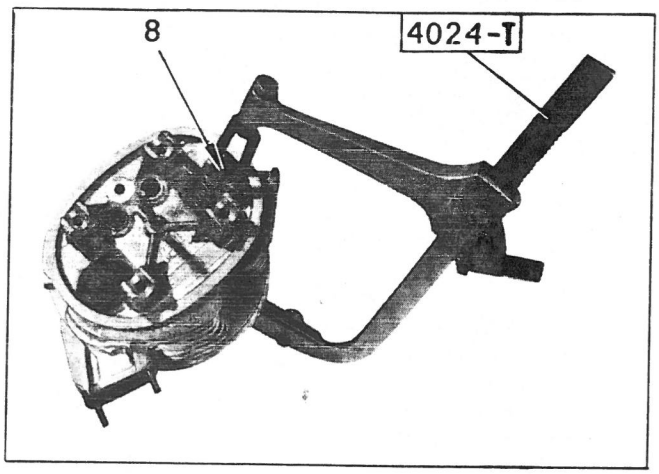

78-20

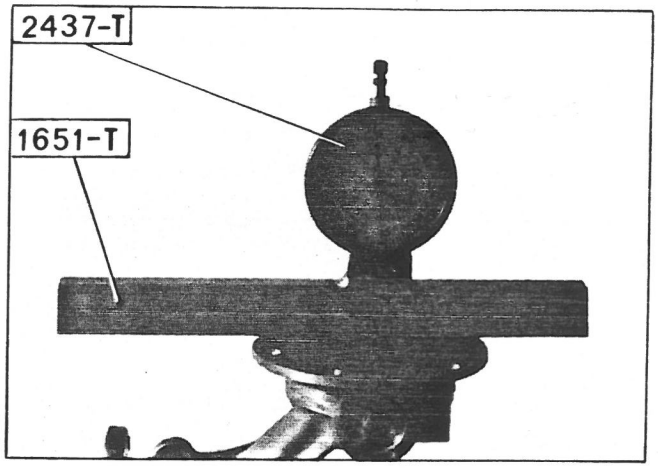

76-805

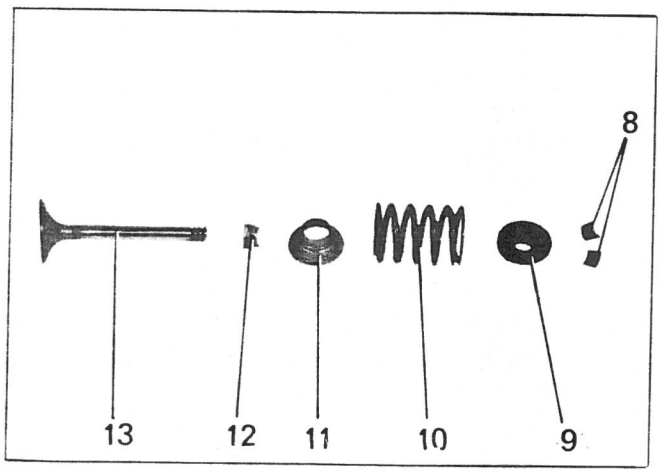

78-04

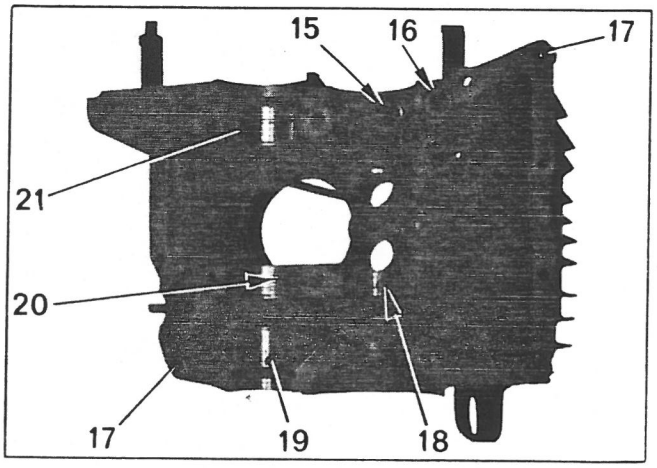

4003

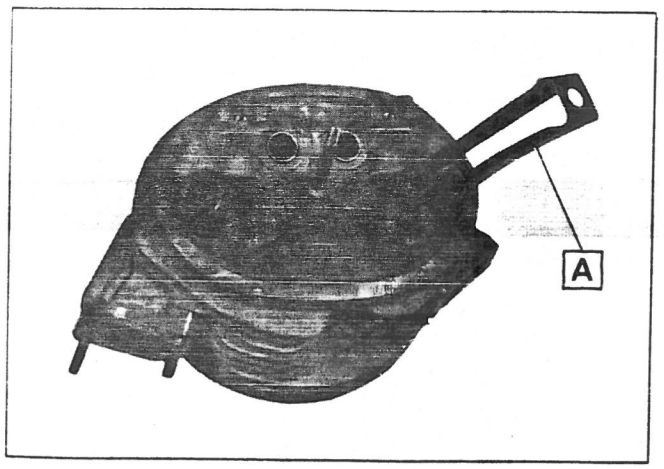

77-778



77-779

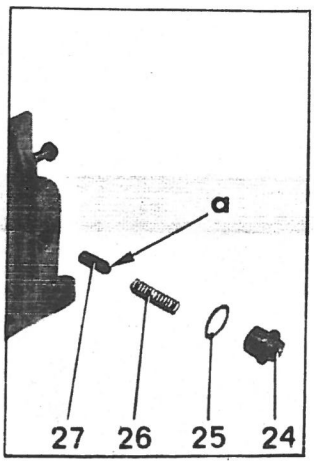

78-02

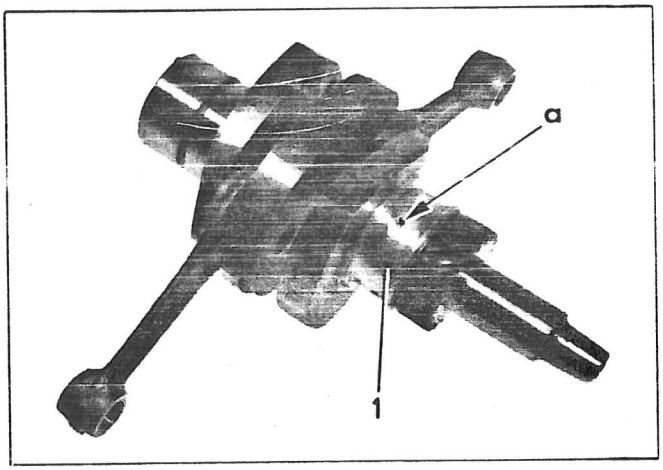

78-21

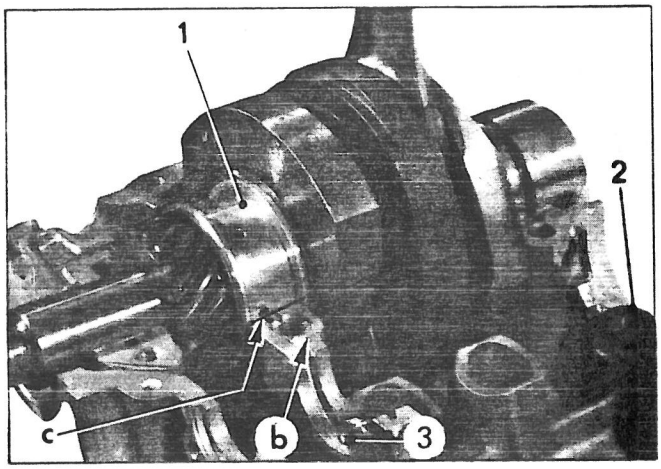

78-23

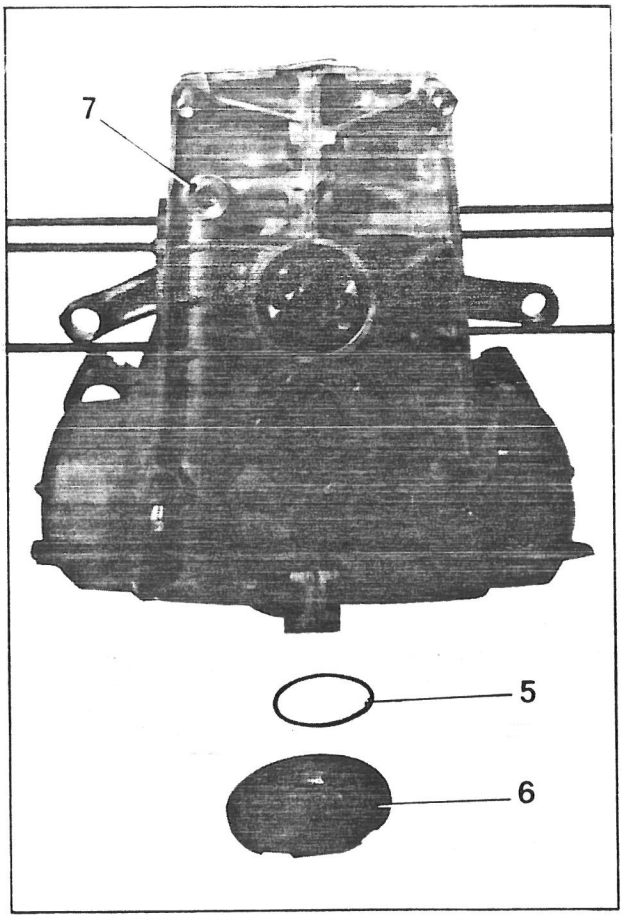

78-03

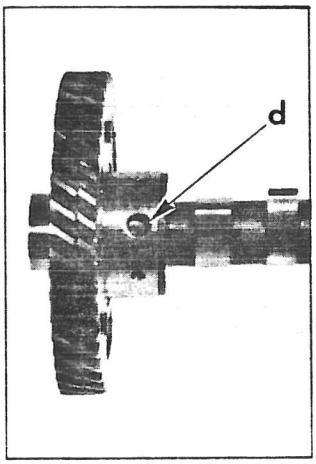

77-670

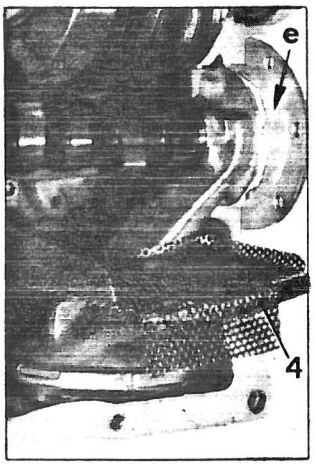

77-650

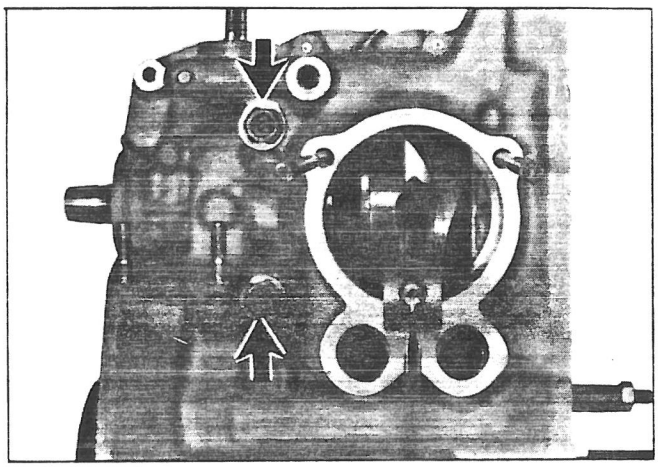

78-22

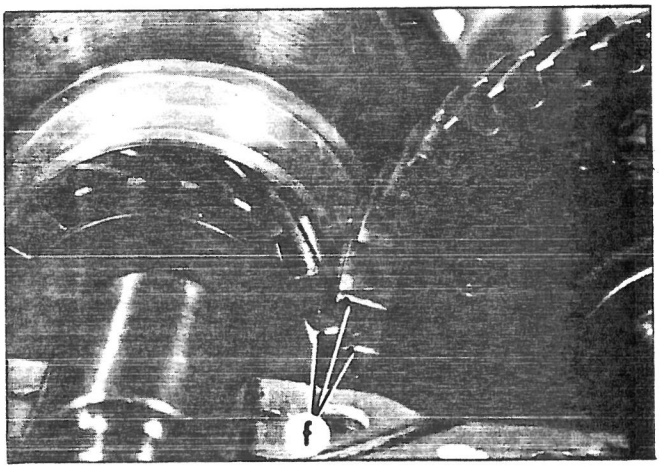

77-651

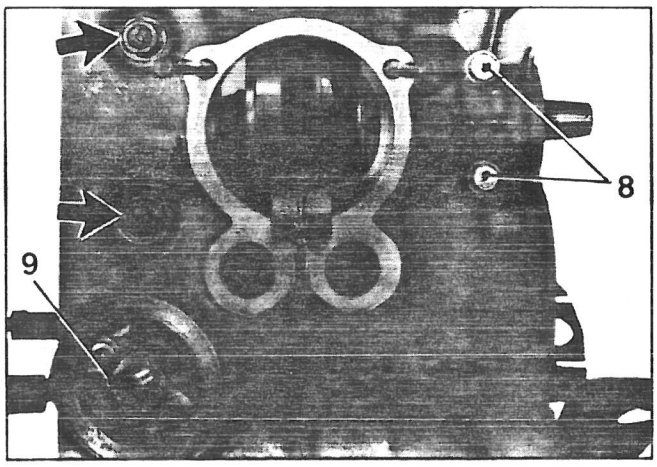

ASSEMBLY

14. To fit the connecting rod assembly :

Oil the crankshaft bearing surfaces.
With the right hand half-crankcase on its support, fit the connecting rod assembly (check that the centering stud is properly located in hole « a » in the ring (1), **that groove « c » in the ring (1) is flush with seal face « b ».**

15. To fit the camshaft :

Coat the oil pump casing face « e » with LOCTITE FORMETANCH.
Oil the camshaft bearing surfaces.

a) Position the camshaft and oil pump assembly in the half-crankcase, lining up points « f » of the timing pinions (ensure that centering stud (3) is properly located in hole « d » in the front bearing of the camshaft).

b) Check that the oil pump casing sits properly on the seal (2).

16. Fit the anti-emulsion shield (4).

17. To assemble the left-hand half-crankcase :
Smear the right half-crankcase joint surface with LOCTITE FORMETANCH.

> Only smear the outside half of the joint surface. The LOCTITE should not penetrate between the bearings and the cases.

To fit the left-hand half-crankcase.

Assemble :
- the crankcase half assembly bolts (flat washer),
- the oil pump cover (6) with its gasket (5). (Change the gasket each time it is removed).

Fit the bearing mounting bolts (➡) (flat washer).
Torque : 3.5 to 4 m.daN.

Assemble and tighten bolts (8).
Torque : 1.6 to 1.8 m.daN.

Tighten the crankcase bolts.
Torque : 1.4 to 1.9 m.daN.

Tighten the oil pump cover bolts.
Torque : 1.3 to 1.5 m.daN.

18. Fit the filter cartridge support (9).
Bolt torque : 1.8 m.daN.
If removed, refit plug (7).
Torque : 4 m.daN *(copper gasket).*

19. To assemble the sealing rings :

The rings must be renewed each time they are removed.

a) To fit the rear ring (1) :
Grease the bore and the outside of the ring.
Use tool 4037-T

b) To fit the front ring (2) :
Grease the bore and the outside of the ring.
Insert the ring using a tube with an outside diameter of 45 mm, an inside diameter of 31 mm, length 100 mm.
The distance between the ring and the casing should be 0.5 mm max.

c) Fit a *new* seal (3) into housing « a » and fit the closing plate (4).
Torque = 1.1 m.daN.

20. To fit the cylinder-piston assemblies :
Oil tappets and fit them at « b ».
Fit *new* O-ring seals (6).
Oil the connecting rod small end and the gudgeon pin.
Offer up the cylinder-piston assembly to the connecting rod.

The arrow on the head of the piston shows the assembly direction. It should be facing the timing end.

Fit the gudgeon pin (5).
Fit the second gudgeon pin lock ring.
Fully engage the cylinder.

21. To assemble the cylinder-heads :
Locate the push rods in the cylinders.
(round end at rocker side).
Fit the cylinder-heads *(check that the O-ring seal (7) is correctly positioned).*
Fit the three nuts (8) *(brass washer under top nuts, steel washer under bottom nut).*
Provisionally tighten the nuts to 1 m.daN.

22. To fit the cylinder-head lubrication pipe (11) :
Position the cylinder head lubrication pipe (11).
Fit the oil pressure switch (10) :
Torque = 2 to 2.5 m.daN.
Fit the bolt-unions (12) (copper seal on each side of the union eye).
Torque = 1 to 1.3 m.daN.

23. To fit the oil cooler :
Fit the protective plate (13).

Change the pipe seals each time they are removed.

Fit the seals to the pipes, offer up the oil cooler (9), start union tightening by hand, spanner
MR. 63011/18
Torque = 1.6 to 1.8 m.daN.
Fit the upper mounting bolt, fit the two spacers between the cooler lugs and the crankcase.
Torque = 1.4 to 1.9 m.daN.

24. To fit the fuel pump :
Oil the control rod (15) and assemble. Turn the engine by hand to bring the control rod to its lowest point.
Fit the spacer (14).
Check control rod protrusion : 0.8 minimum.
(measure with gauge).
If it is not 0.8, use a thinner spacer to obtain this dimension.
Fill the lever housing with grease and fit the fuel pump.
Nut torque = 1.2 to 1.5 m.daN.

78-43

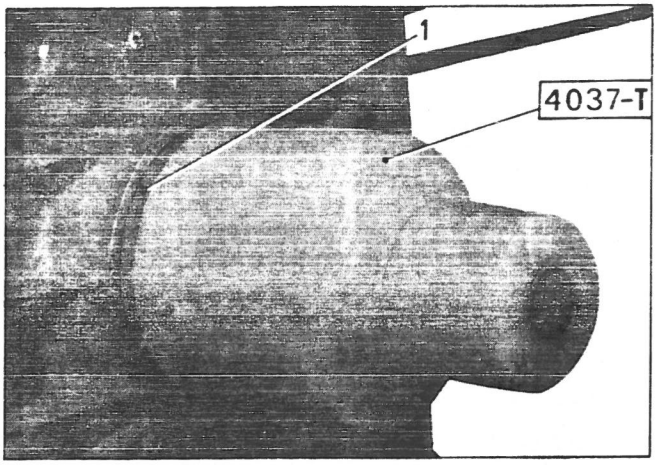

78-36

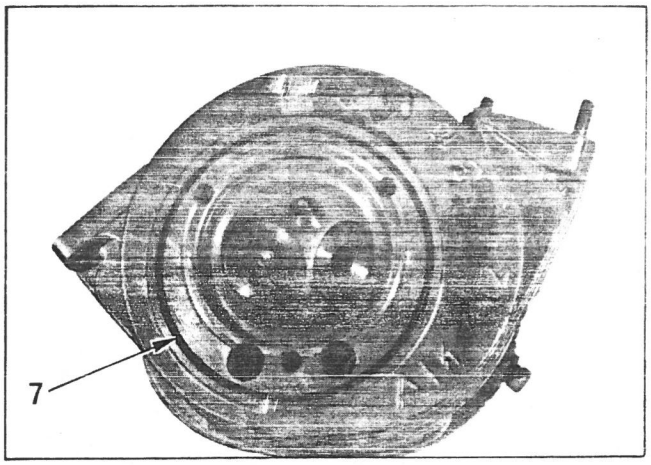

78-18

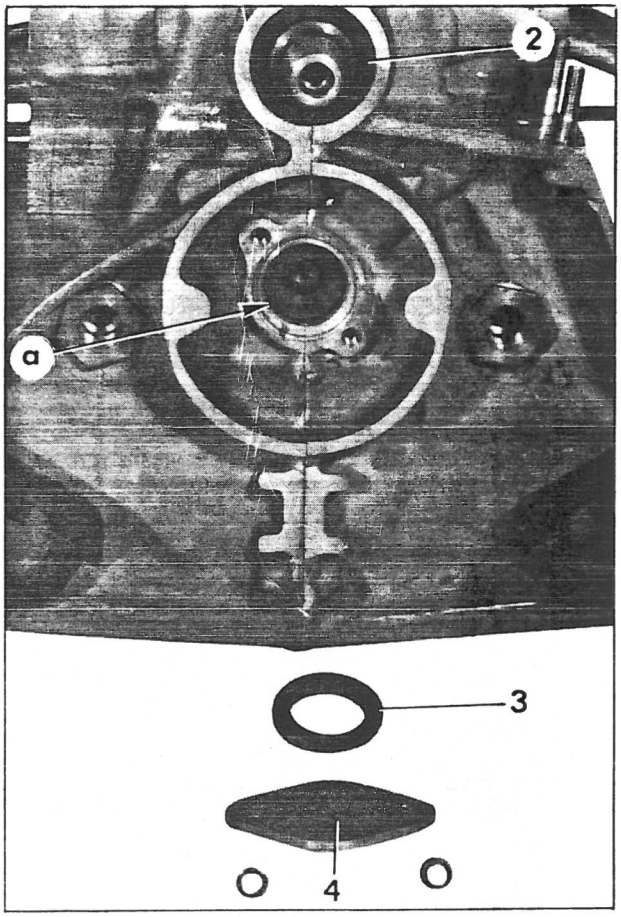

78-39

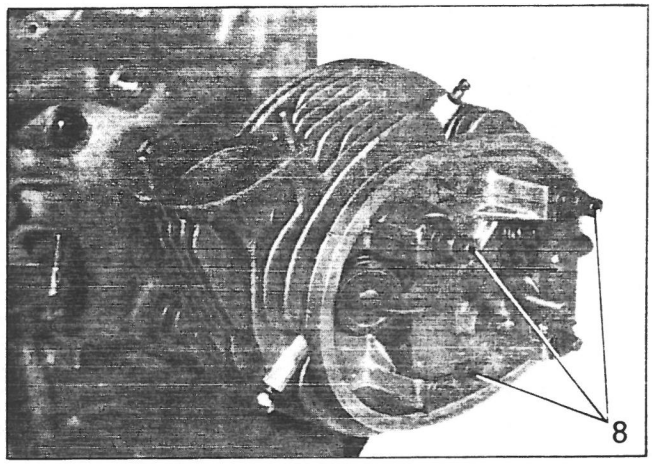

78-38

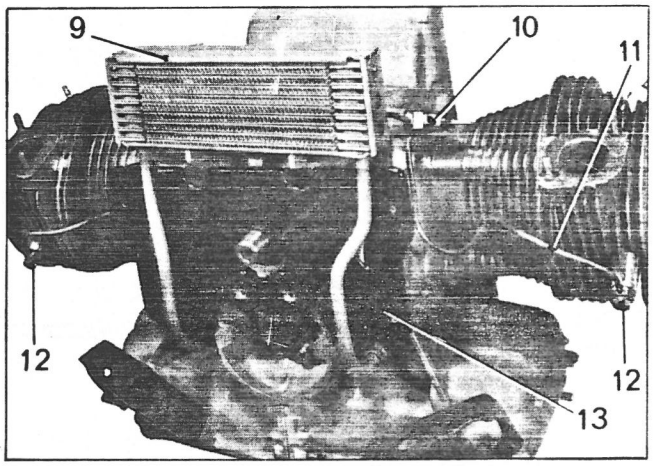

78-37

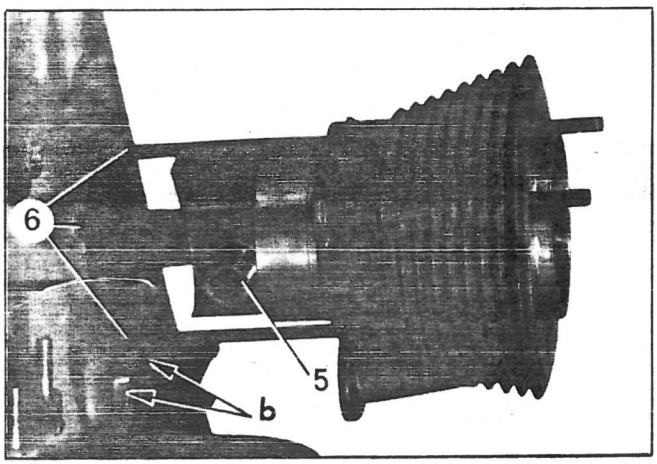

78-41

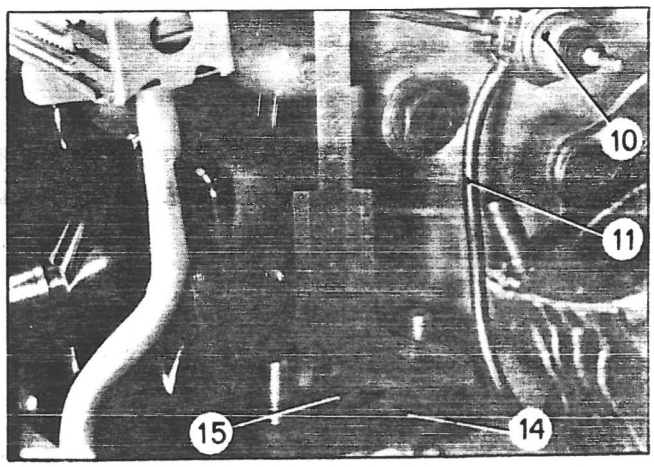

78-40

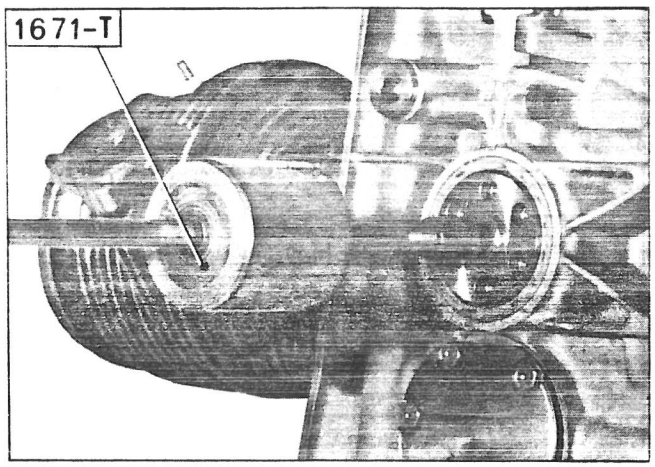

A. 11-1

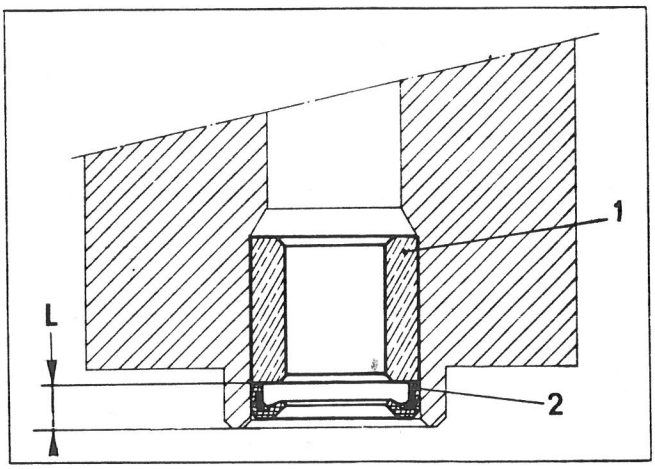

78-42

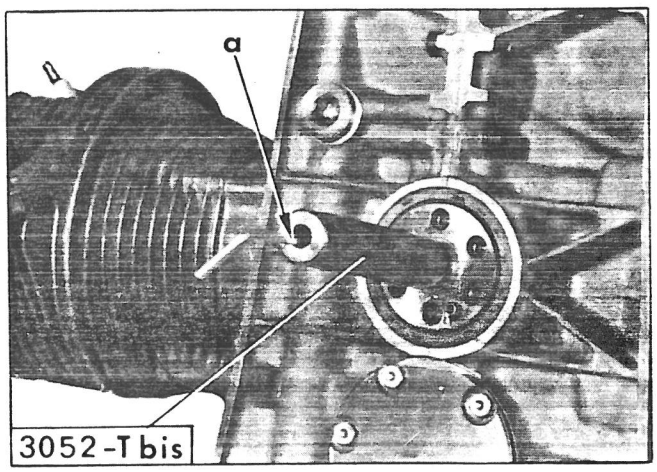

78-48

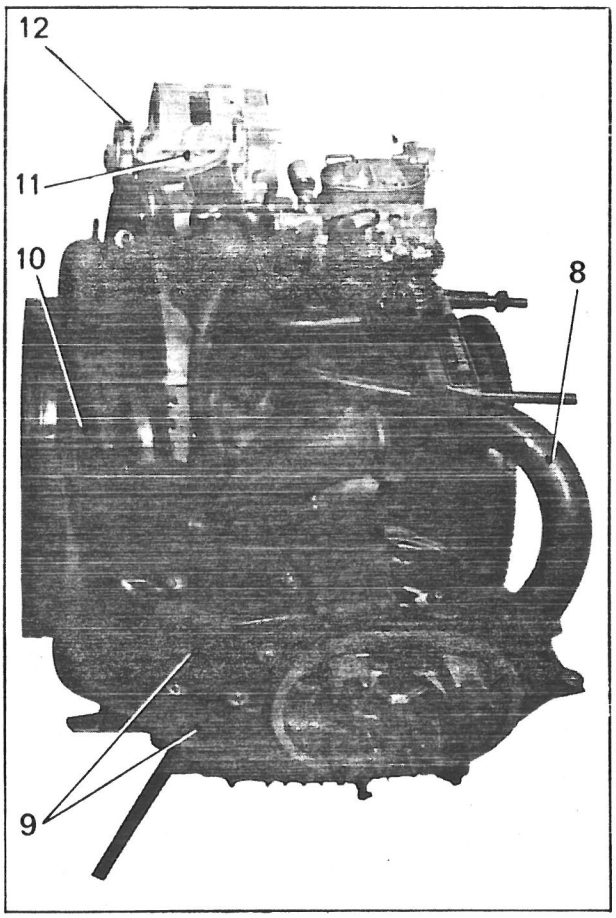

78-47



78-49

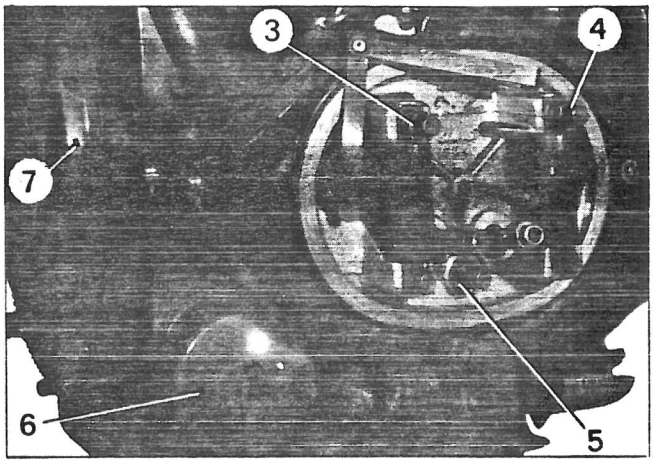

77-644

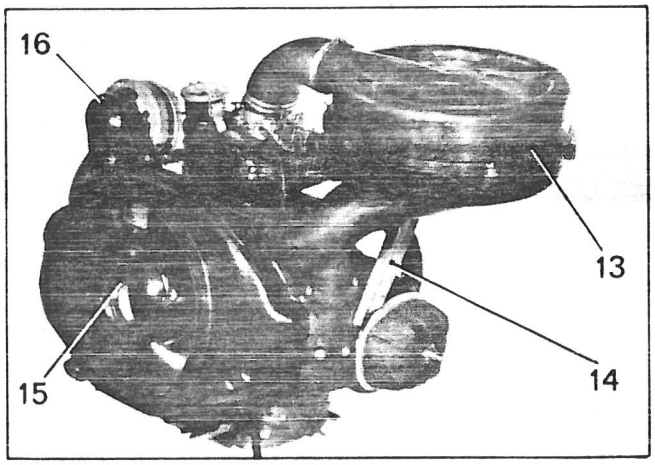

25. To change the self-lubricating bush :

a) Remove the sealing-ring (2) and the self-lubricating bush (1) from the crankshaft bore.

Use extractor 1671-T

b) Soak the self-lubricating bush for one hour in engine oil. Leave to drain.

c) Fit the self-lubricating bush (1) which should be set back by 5 mm (L) into the crankshaft.

Use mandrel 3052-T bis

After fitting the bush, remove the mandrel with centering bolt « a ».

d) Fit oil-seal (2) *(manufacturer's name and reference facing the outside of the engine).*

26. To reassemble the engine :

Fix the breather (11) (gasket between the flange and the crankcase).

Fix the dipstick guide tube and the alternator tensioner lug.

Fix the air intake (10) and the cylinder head cooling panels (9).

Fit the flywheel (7) *(change bolts each time it is removed).*

Torque = 8 m.daN.

Fit the intake-exhaust piping assembly (8) and its equipment (change the seals each time they are removed).

Torque = 1.5 m.daN *(serrated washers).*

Fit cartridge (6) and oil the seal.

27. To tighten down the cylinder heads :

The tightening of the cylinder heads should be carrried out after fitting and tightening the pipes.

Use the following tightening sequence :

- front upper nut (4),
- rear upper nut (3),
- lower nut (5).

Torque = 1.9 m.daN.

28. To set the rockers :

Setting should be carried out with the engine cold.

Set one cylinder valve when the corresponding valve of the opposite cylinder is fully opened.

Intake and exhaust = 0.20 mm.

Torque = 1.4 to 1.9 m.daN.

29. To fit the cylinder head covers :

Stick the gasket on the cylinder head cover only (BOSTIK 1400 or MINNESOTA F 19 glue)

Incorrect assembly of the rubber gasket or incorrect tightening of the nut may result in total loss of the engine oil.

Torque = 0.5 to 0.7 m.daN.

30. Fit :

- the alternator belt (12),
- the fan (15) (check that the belt does not touch the oil cooler).

Torque = 5 to 6 m.daN.

- the belt protective casing (16),
- the air filter support (14) and the filter (13).

31. To fit the clutch :

Check that the disc runs freely on the gearbox drive-shaft. Couple up the clutch mechanism to the engine flywheel.

Center the disc using mandrel MR. 630-31/69

or 1713-T

When tightening the bolts check that the mandrel slides freely.

Torque = 1 to 1.3 m.daN.

OPERATION
VD1. 330-3

RECONDITIONING A GEARBOX

SPECIAL TOOLING

TOOLS SOLD

2437-T : Comparator

3253-T : Pinchers for lock rings

Kit 3184-T bis : comprising :

A : Comparator support
B : Comparator support rule
C : Cap
D : Mandrel
E : Mandrel *(not used in this operation)*
F : Bracket
G : Mandrel
H : Pad

4039-T : Mandrel for fitting gearbox output seals.

TOOLS NOT SOLD

MR. 630-27/18 : Pinchers for retarding dowels
MR. 630-31/84 : Mandrels for removal and fitting control lever ball-joint Mecanindus pin.

TIGHTENING TORQUES

Compulsory tightening torques *(torque wrench)* :

Tightening point	Torque in m.daN
Bevel pinion nut-bolt (lock by peening metal)	10 to 12
Primary shaft nut (lock by peening metal)	7 to 8.5
Reduction wheel bolt (face and threads greased)	8 to 9

Recommended tightening torques :

Reverse pinion pin	2.7 to 3.3
Casing half assembly nuts (flat washers)	1.4 to 1.5
Rear cover bolts (flat washers)	2.5 to 3
Clutch housing mounting bolts	1.4 to 1.5
Gearbox output shaft mounting bolts (copper washers)	1.1
Drain and level plugs (copper gaskets)	3.5 to 4.5
Support bracket mounting bolts	2.1 to 2.8

12827

2437-T

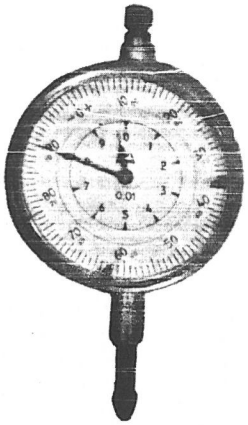

12763

3253-T

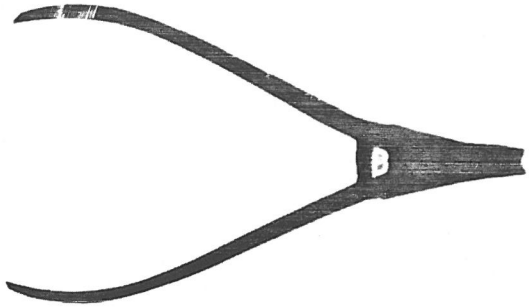

14722

3184-T.bis

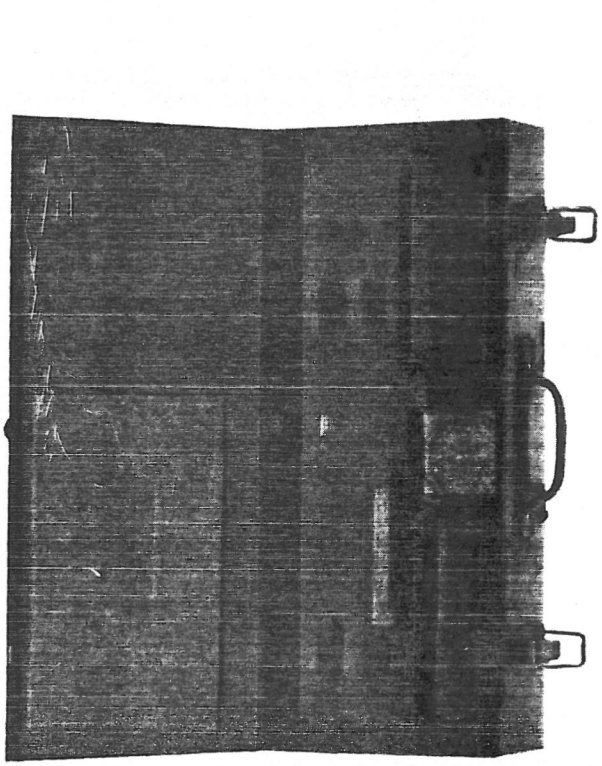

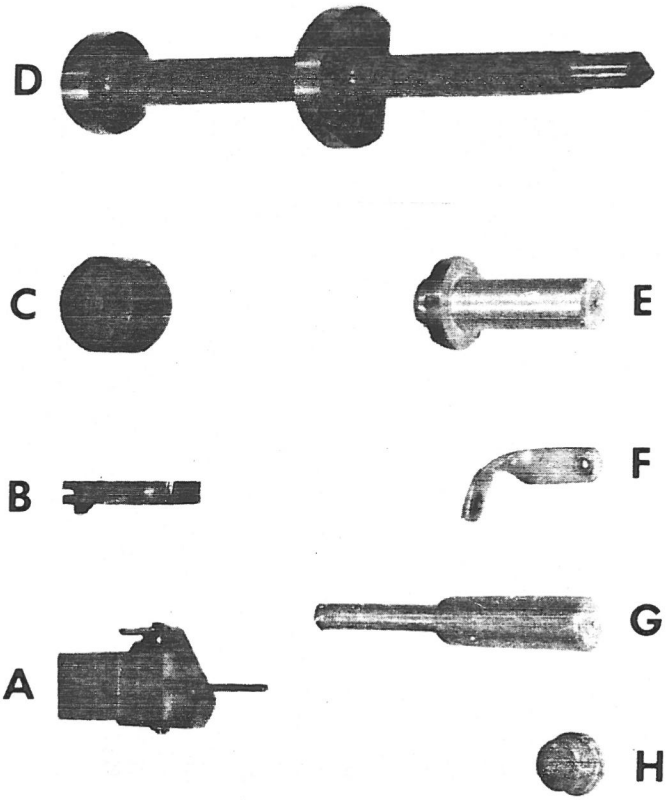

78-129

4039-T

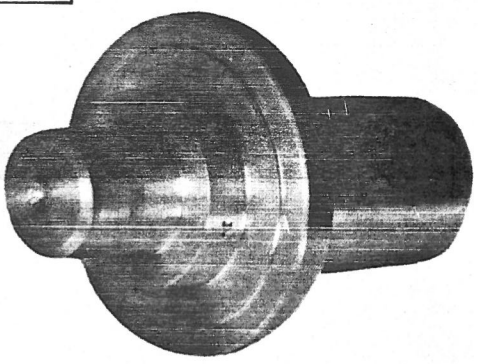

76-955

MR.630-27/18

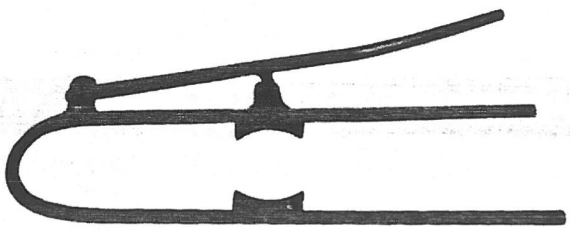

78-663

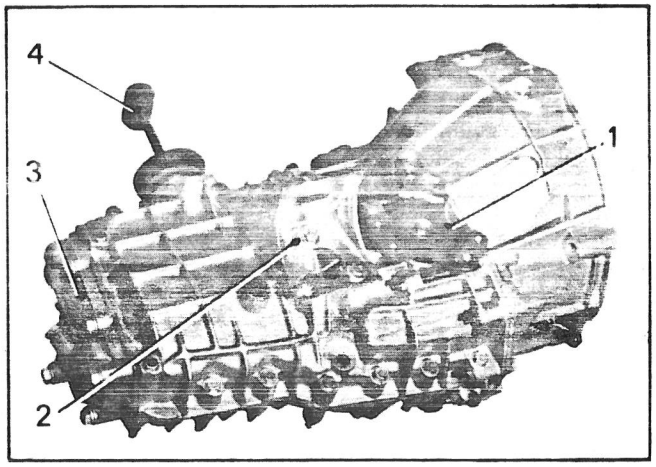

78-661

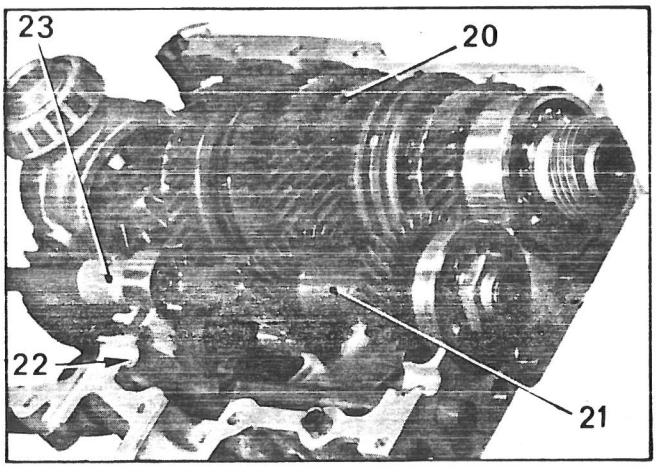

78-755

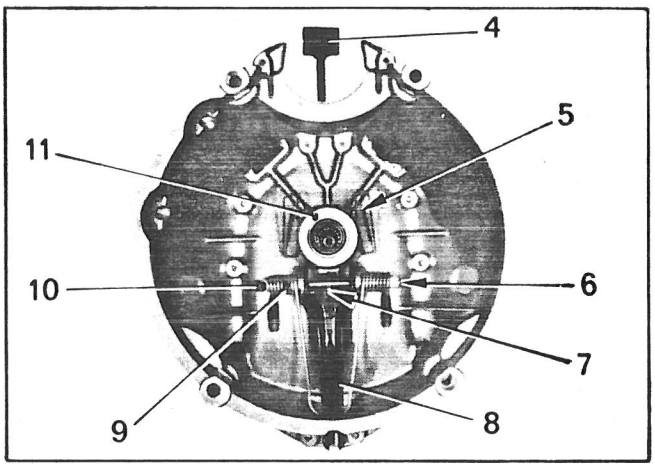

78-664

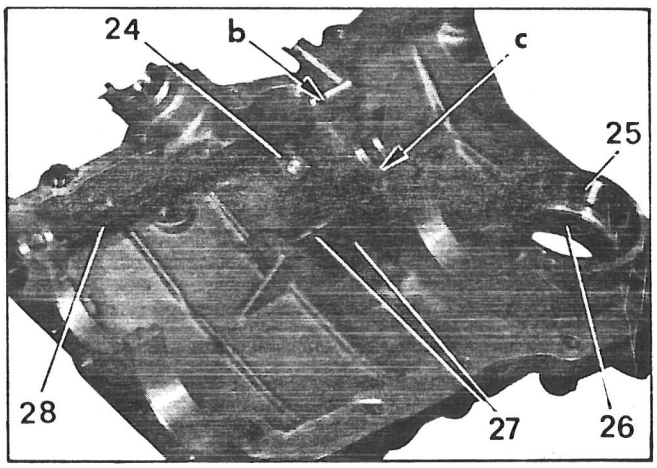

78-660

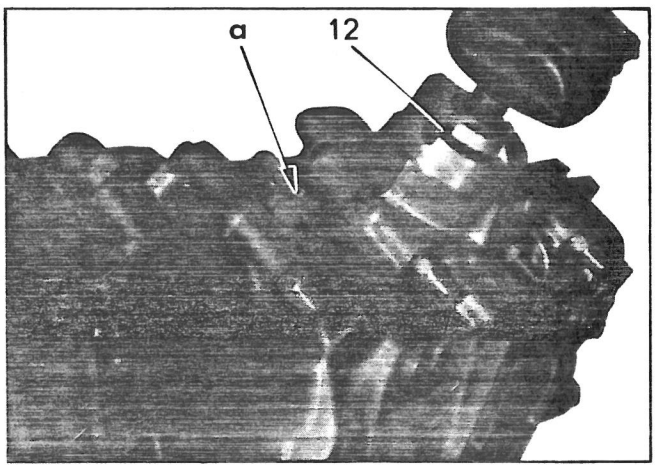

78-662

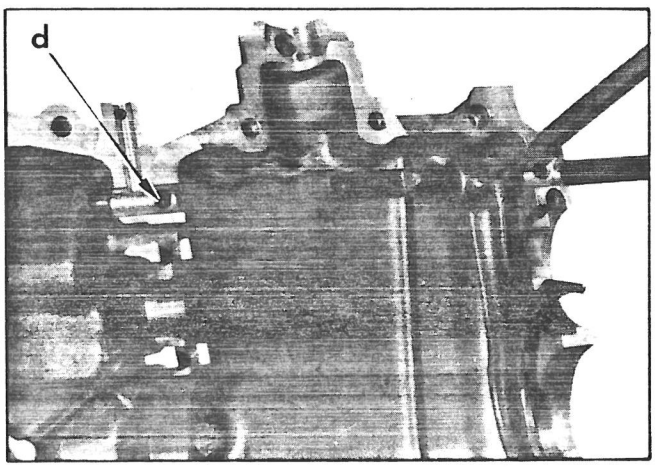

78-659

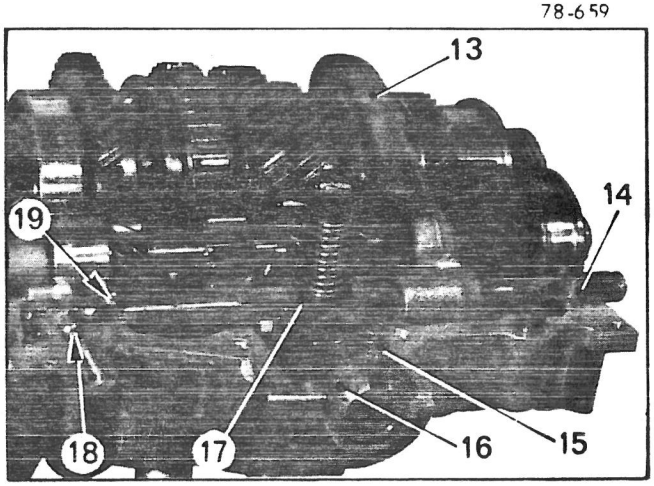

78-662

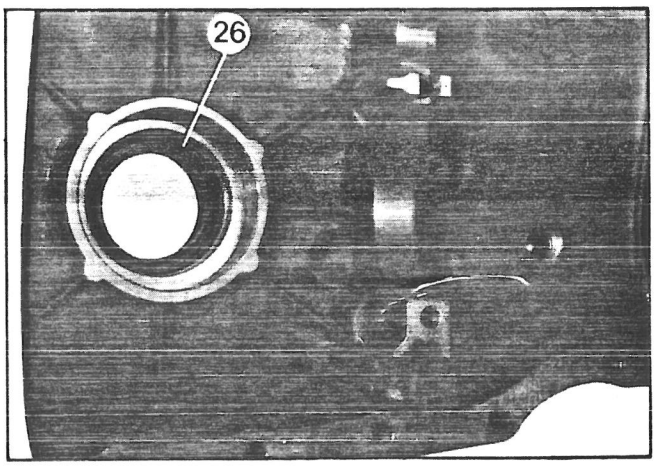

RECONDITIONING A GEARBOX

I. REMOVAL

1. Drain the gearbox.

2. Remove :
- the gearbox output shafts (1),
- the support-angles (2),
- the rear cover (3),
- the selector lever (4) *(if necessary)*, the fork gudgeons, by removing the Mecanindus pin (12) MR. 630-31/84 A *(the pin remains on the ball-joint).*

3. Remove :
- the clip (5),
- the stop (11),
- the pin locking bolt (2),
- the pin (6),
- the fork (8), the spring (9) and the anti-rattle rings (10).

4. Remove the clutch housing, *and stand the gearbox on its left half-casing.*

5. Blank off orifice « a » with a finger.
Remove the pin (12).
Release the blanking disc from orifice « a » and the spring.

6. Remove the right hand half-casing :

CAUTION : Care must be taken that the locking ball (18), the ball-joint guide (15) and the guide thrust spring do not drop out *(recover these three parts).*

Remove :
- the return spring support plate (17),
- the selector lever ball-joint (16),
- the plunger (14) and the locking ball (19).

7. Remove :
- the third and fourth gear fork and pin (13),
- the locking ball (22),
- the drive-shaft (23) and primary shaft (21) assembly,
- the pinions and secondary shaft assembly (20),
- the differential,
- the half-casing bearing outer races (25). *Mark them with the corresponding bearings.*

NOTE : If overhauling does not entail changing the following :
- the gearbox casing,
- the crown wheel and pinion,
- the differential bearings,
- the differential casing,

lock the position of the shims (left or right) to avoid having to reset the backlash.

II. STRIPPING DOWN THE ASSEMBLIES

1.To strip down the left hand half-casing :
Remove :
- the reverse pinion (27) and pin,
  Extract the pin at « c » using a magnet.
- the reverse gear lever (24),
- the reverse gear control pin (28),
  (put one finger over orifice « b » to prevent the ball and locking spring from springing out).
- the seal (26),
- the blanking plug or the reversing lamp switch.

2. To strip down the right hand half-casing :
Remove :
- the first and second gear fork and shaft (place finger over orifice « d » of the locking ball housing to prevent it from springing out).

When removing the pin, place the shaft-fork assembly against the rear shaft bearing to avoid damaging it.

Remove the drain plug and the oil level plug.
Remove the seal (26).

3. To strip down the primary shaft :

Remove :
- the circlips (1),
- the needle bearing (2),
- the nut (4),
- the bearing (3).

NOTE : The needle bearing inner race (2) is not interchangeable.

4. To strip down the bevel pinion :

There should be no scratches or dents on the wheel bearing surfaces. Take care when removing the parts.

a) Remove :
- the nut-bolt (10),
- the bearing (9),
- the washer (8). *If the gearbox is to be overhauled without changing the gearbox casing and the crownwheel and pinion, retain washer (8) to avoid having to reset the conic distance.*
- the fourth gear idling pinion (7),
- the fourth gear synchro ring (6),
- the stop ring (5), pinchers 3253-T
- the third and fourth gear synchro hub/sliding gear assembly (11),
- the third gear synchro ring (12),
- the third gear idling pinion (13).

NOTE : The third and fourth gear synchro rings are identical.
However, if these parts are not renewed, they must be left matched with the corresponding pinions.
Before removing the second and first gear idling pinions, wrap the shaft and pinion assembly in a cloth to prevent losing the locking pins and the spring.

b) Remove :
- the washer (14) and the two half-washers (15) and (16),
- the second gear pinion (17),
- the retarding dowels (20) and their spring (19),
- the second gear synchro ring (18),
- the locking ring (21) - Pinchers 3253-T
- the first and second gear synchro hub-sliding gear assembly (22),
- the first gear synchro ring (23),
- the first gear idling pinion (24),
- the retarding dowels (26) and their spring (25).

c) If necessary, remove the front bearing of the bevel pinion.

5. To dismantle the differential :

Remove :
- circlip (28) and drift out the pin,
- the satellite and planetary gears,
- the crown (27),
- the taper bearings - universal extractor and pad 3184-T bis H

6. Strip down the clutch housing :

To remove the drive shaft seal (29) insert the end of a screwdriver under the metal lip « a » of the seal and use as a lever to remove the seal from its housing.

7. Clean the parts :

The bearing surfaces « b » of the different gears on the bevel pinion shaft should be free of any defect.
Any machining of the surfaces is strictly prohibited particularly on the bearing surfaces since the gear wheels have undergone a special surface treatment.

III. PREPARATION OF THE ASSEMBLIES.

Oil all components before assembly.

1. Prepare the differential casing :

Press fit the taper roller bearings (30), using a tube (internal diameter = 36 mm, external diameter = 45 mm, length = 40 mm).

76-888

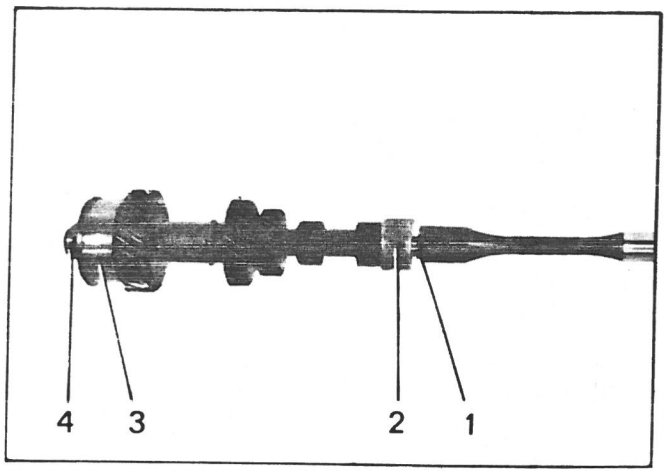

76-884

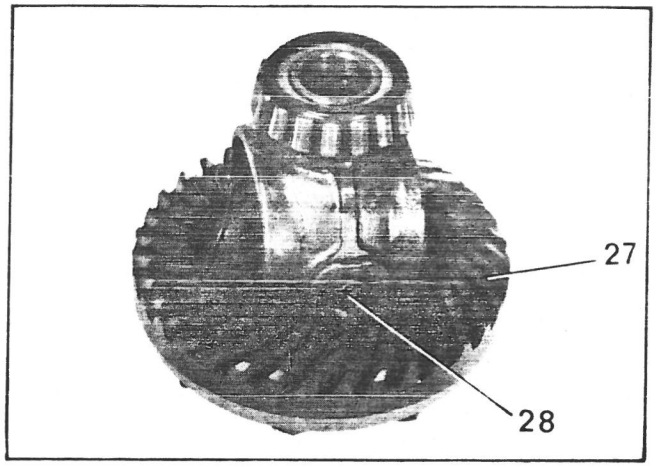

78-673

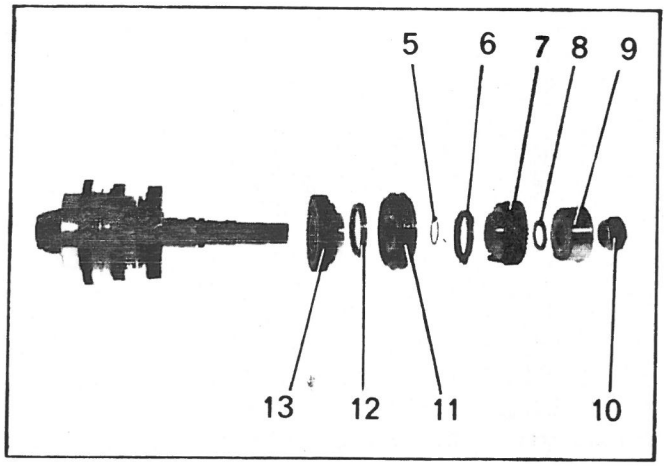

76-925

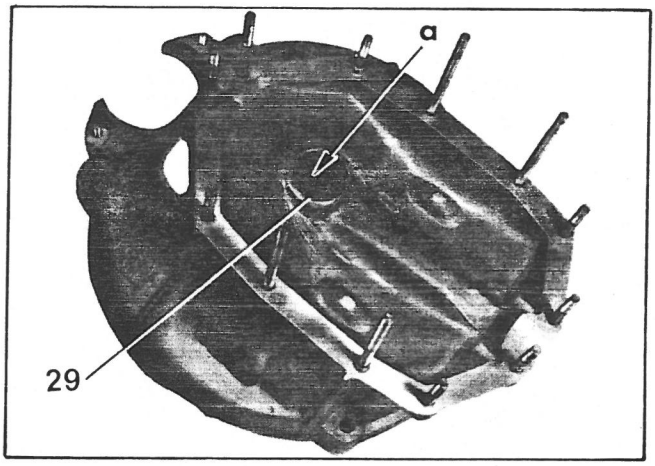

78-672

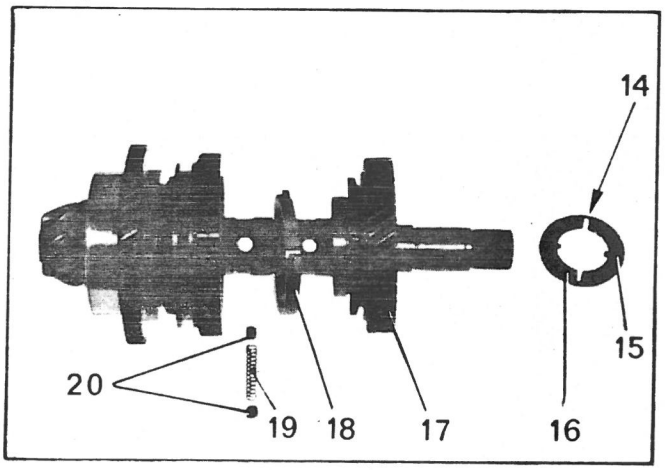

11-241

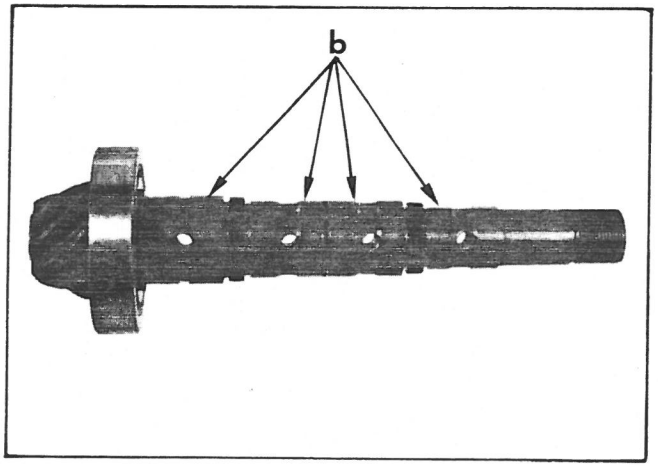

78-671

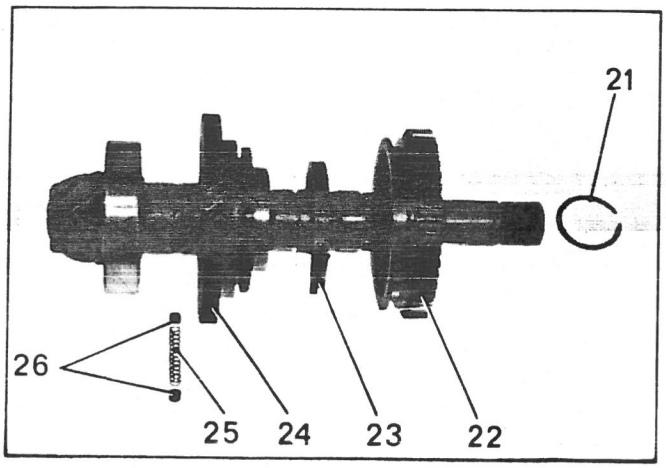

7904

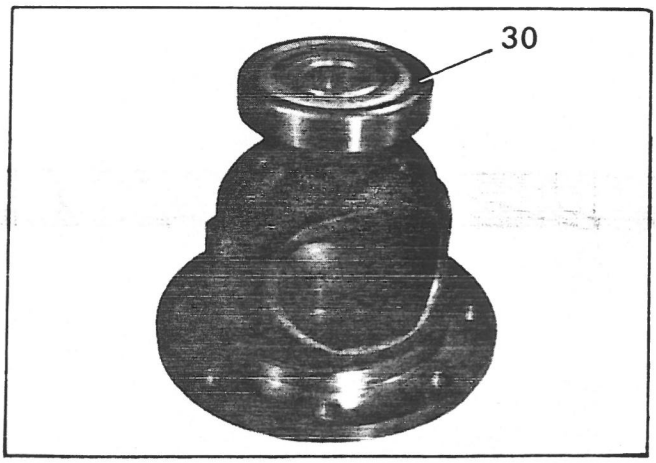

77-262

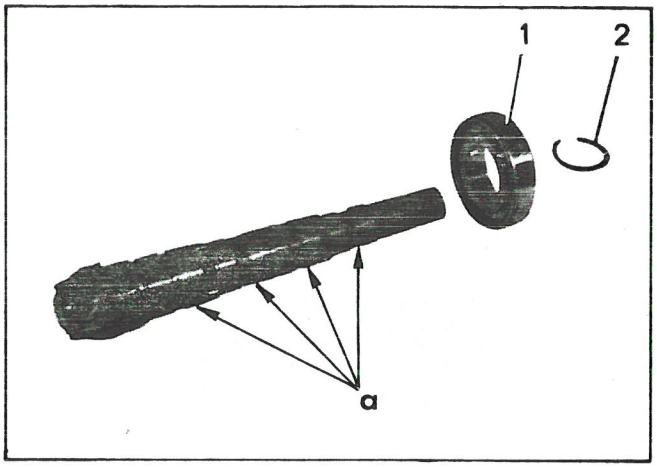

78-672

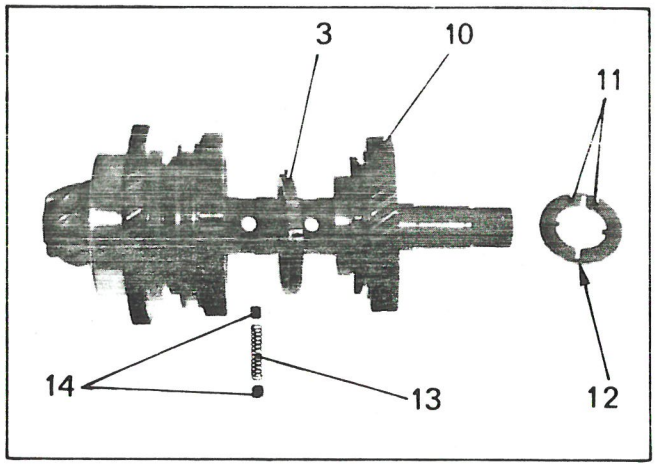

78-669

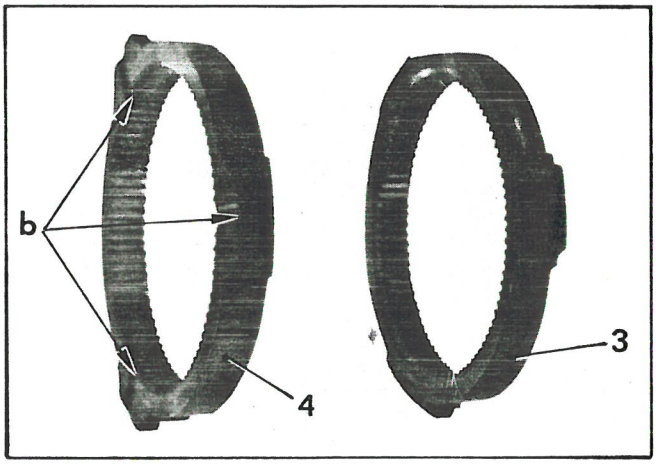

G 33-21

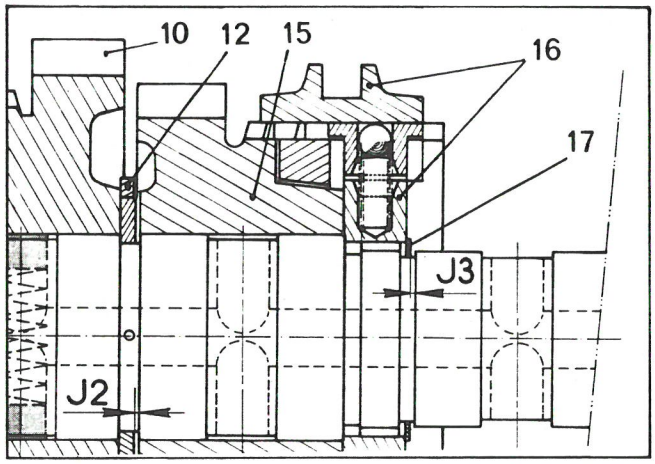

78-671

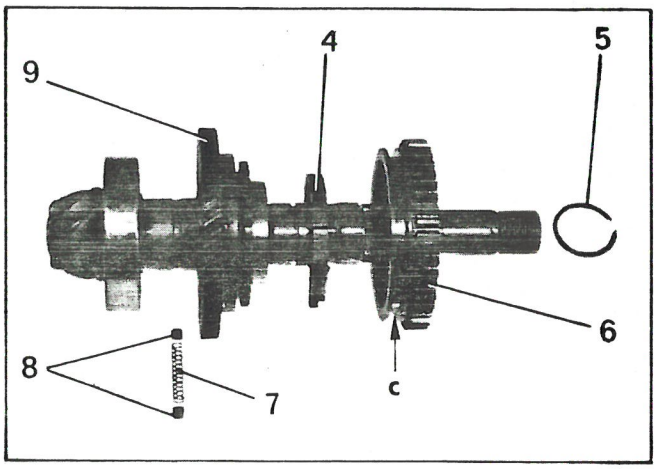

7293

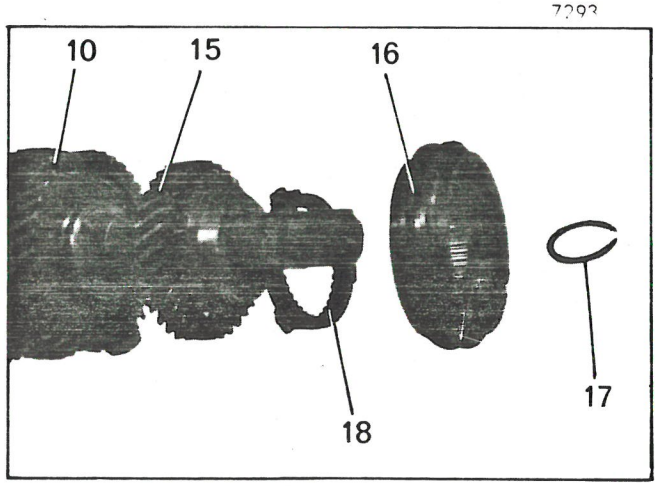

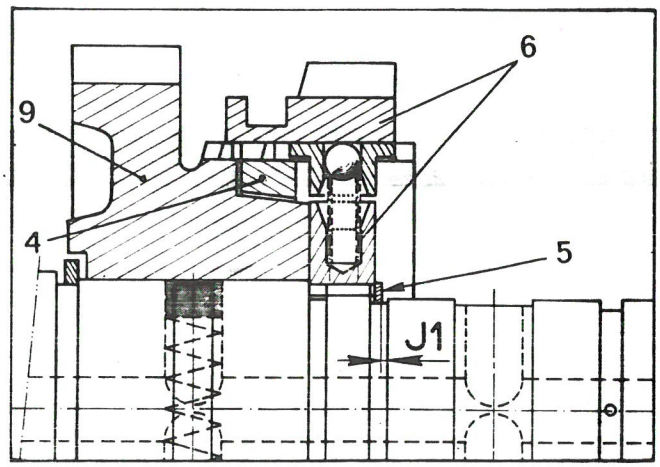

77-445

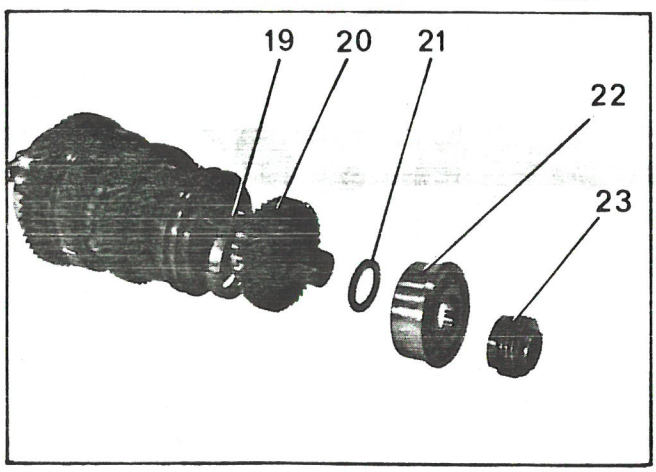

2. Prepare the bevel pinion assembly :

a) Fit the roller bearing (1) if necessary.
- fit using a press and a tube (internal diameter = 45 mm, length = 220 mm).
- Fit the stop ring (2) using pinchers 3253-T

When refitting the stop rings, take care not to scratch surfaces « a » of the gear wheels.

IMPORTANT : The first and second gear synchro rings are not identical. The first gear ring is identified by three slots at 120° at point « b » at the wider diameter of the taper. Take care not to mix them up on assembly.

b) Fit :
- the retarding dowels (8) and their spring (7)
- the first gear pinion (9) MR. 630-27/18
- the first gear synchro ring (4),
- the first and second gear synchro hub-sliding gear assembly (6) *(groove « c » facing first gear pinion).*

c) *Adjust the axial clearance of the first and second gear synchro hub.*
From the locking rings sold by the Replacement Parts Department, select one which will give a maximum clearance of *J1 = 0.05 mm* (0.05 mm shim should not be able to be inserted between the ring (5) and the side of the groove).

d) Fit the lock ring (5).

e) Fit :
- the second gear synchro ring (3),
- the retarding dowels (14) and their spring (13),
- the second gear pinion (10).

f) *Adjust the 2nd and 3rd gear wheel thrust bearing clearance by using the thickness of the adjusting half-washers (11).*
With the half-washers in position, there should be a maximum clearance of *J2 = 0.05 mm* between the half-washer and the side of the groove (a shim of 0.05 mm should not be able to be inserted).

NOTE : The two half-washers must be of the same thickness.
Fit the two half-washers (11).
Fit the retaining washer (12).

g) Fit :
- the third gear pinion (15),
- the third gear synchro ring (18),
- the third and fourth gear synchro hub-sliding gear assembly (16).

NOTE : Assembly (16) is symmetrical.

h) *Adjust the axial clearance of third and fourth gear synchro hub :*
Proceed ,in the same way as for the first and second gear synchro hub (see paragraph c) to obtain a clearance of :

J3 = 0.05 maximum

i) Fit the lock ring (17).

j) Fit :
- the fourth gear synchro ring (19),
- the fourth gear pinion (20),
- a spacer washer of a known thickness (21),
- the bearing (22),
- the nut-bolt (23).

k) Tighten the nut-bolt (1) to a torque of **10 to 12 m.daN,** (torque wrench) *but do not peen the metal for locking.*

To adjust the pinion conic distance, a spacer washer of a known thickness must be fitted and the nut (1) tightened to a torque of 10 to 12 m.daN.

3. Prepare the drive-shaft and primary shaft assembly :

a) Fit the ball bearing (3).
Tighten nut (4) to : **7 to 8.5 m.daN** (torque wrench).
Lock the nut by peening the metal in the groove of the shaft.
b) Fit the needle bearing (6).
c) Couple up the drive-shaft (7) to the primary shaft (5), by slightly separating the ends of the lock ring (2).

4. Prepare the clutch housing :

a) Fit the clutch fork and stop (if these parts have been removed).
Fit the two anti-rattle rings (9) into the spring coils (10) with the shoulders face to face.
Hold the fork (11) in position by abutting the free ends of the spring in housings « a ».
Engage and position the pin, tighten the nut (12) (LOCTITE FRENETANCH).
Fit the stop (13) and the clip (8).
IMPORTANT : For correct assembly, the clip should be abutted behind the two slots « b ». Under no circumstances should the clip be in contact with the rear face « c » of the stop.
b) Fit the drive-shaft seal.
Grease the housing bore and the outer edge of the joint surface.
Fit the seal (metal collar « d » visible on the gudgeon side) using a mandrel 3184-T bis G
Check that the two centering rings are located at « e » and « f ».

5. Prepare the right hand half-casing :

Engage the first and second gear fork (15) control spindle into the rear bearing *(slots « g » on the differential end).*
Engage fork (15) on the spindle (16). Fit the Mecanindus pin.
Fit the spring (14) and the locking ball (21) into their housing *(grease beforehand).*

NOTE : Five balls and three locking springs are identical.

Compress the ball and spring (5 mm diameter rod) and engage the spindle (16) in the front bearing.

6. Prepare the left hand half-casing :

a) Fit the reverse gear intermediate wheel and pin.
Fit the spindle locking cylindrical pin (22).
NOTE : This pin is used for locking the primary shaft needle bearing and should protrude slightly beyond the thrust surface of this bearing.
b) Fit the reverse gear lever control spindle.
Fit spring (19) and locking ball (20) into their housing *(grease beforehand).*
Engage the spindle (17) *(locking slots « h » on the differential end)* in the rear bearing.
Compress the ball and locking spring (5 mm diameter rod) and engage the spindle (17) in the front bearing.
c) Engage the reverse gear lever (18) under the spindle (24) and fit it in a groove of the pinion (23) and in the groove of the spindle (17). Fit and tighten the lever spindle to a torque of **2.7 to 3.3 m.daN.**

77-261

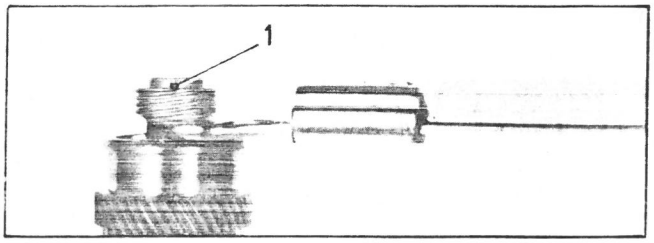

74-888

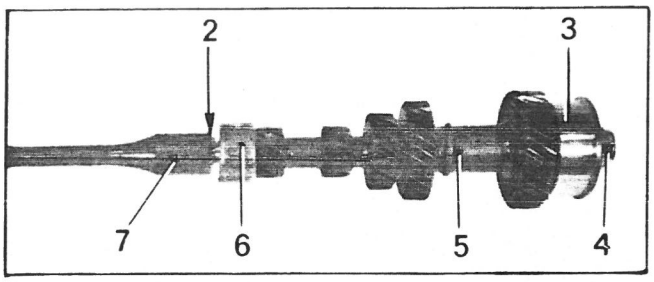

78-755

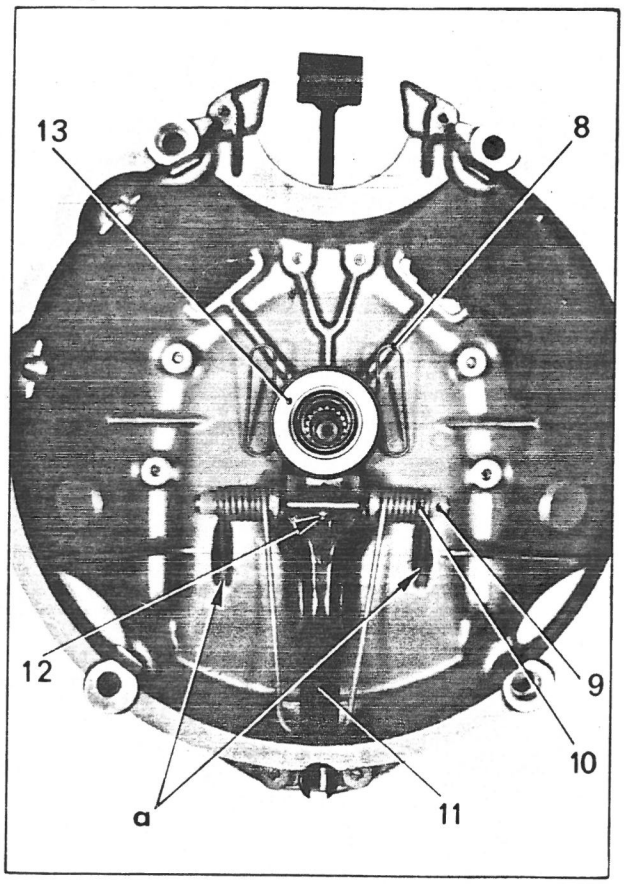

78-343

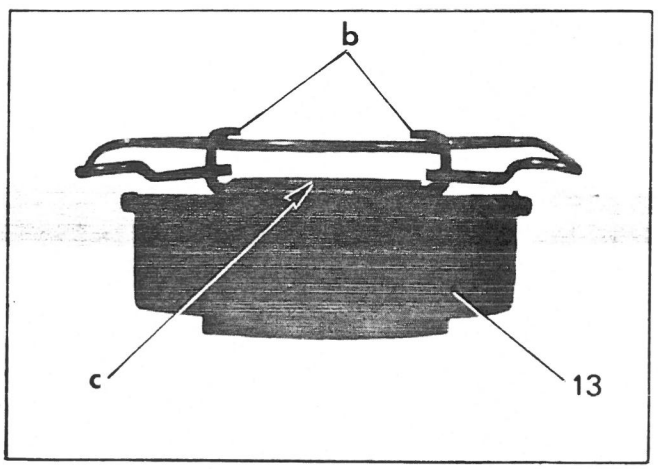

76-925

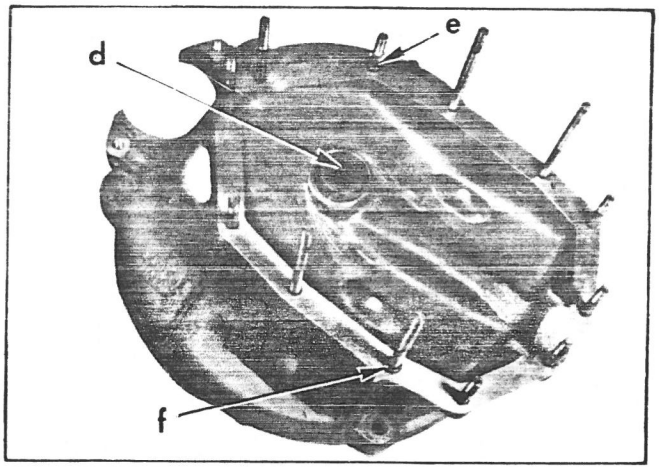

7401

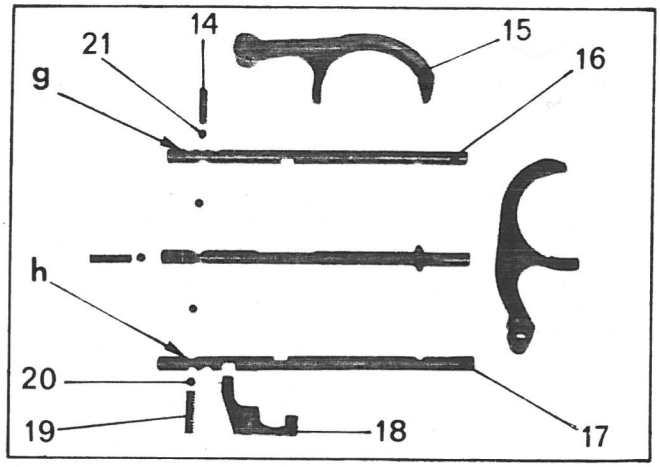

G 33-11

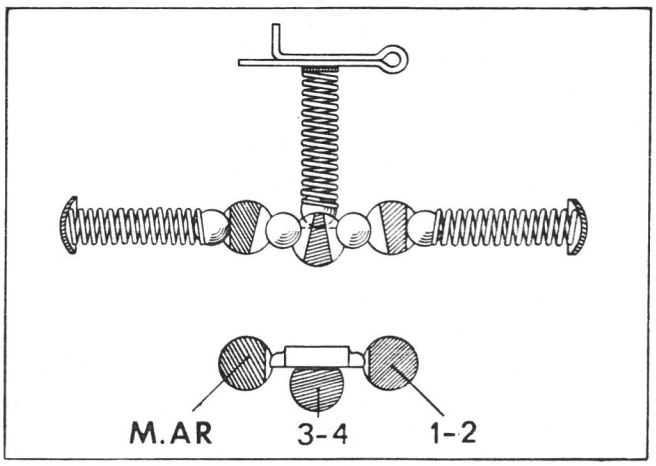

78-664

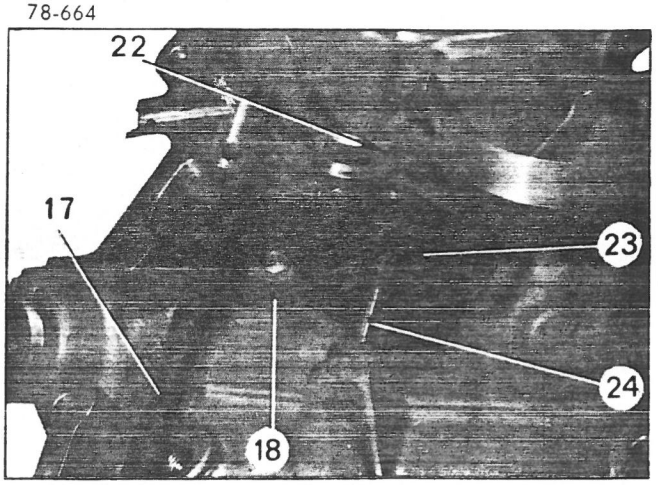

G. 33-13

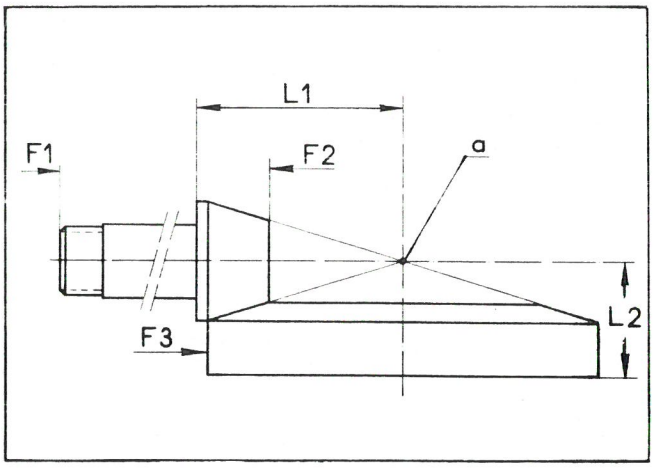

AL. 33-11 a

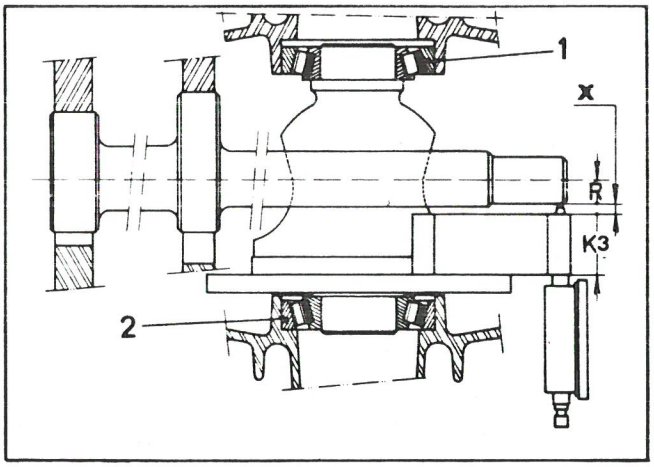

7704

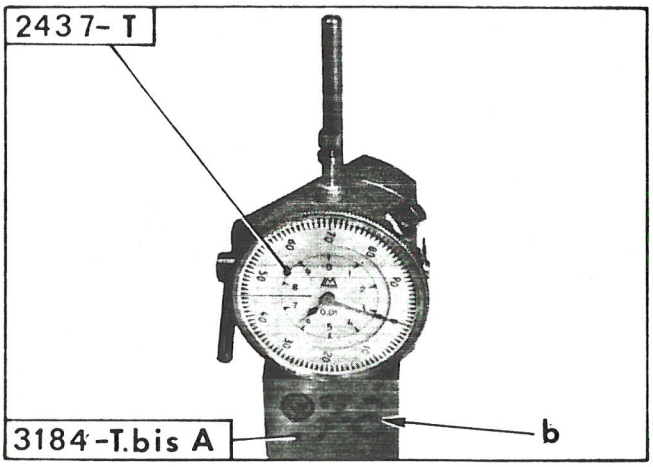

7705

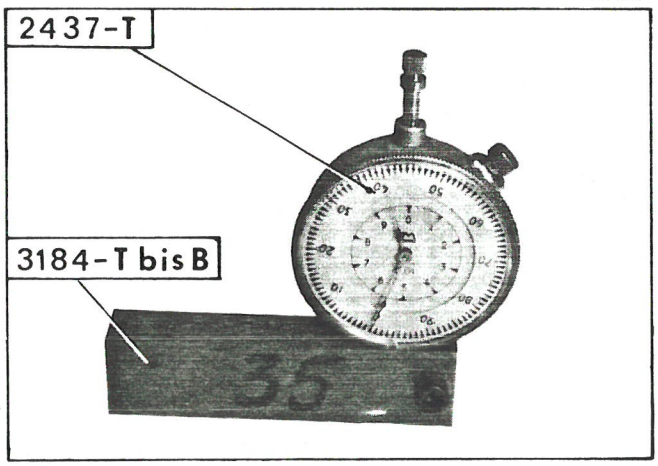

AL. 33-10

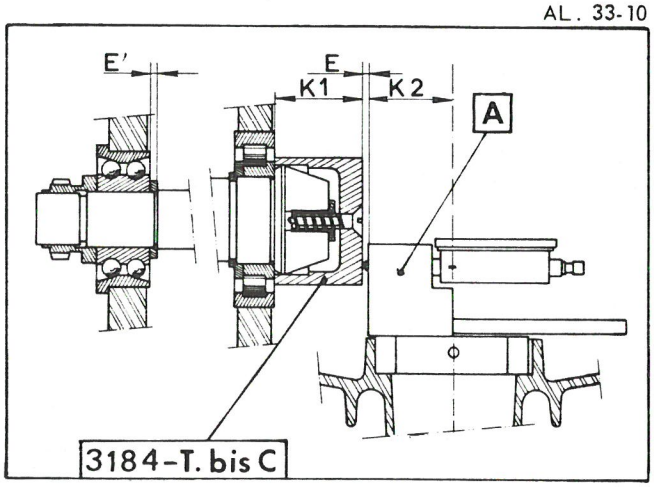

78-666

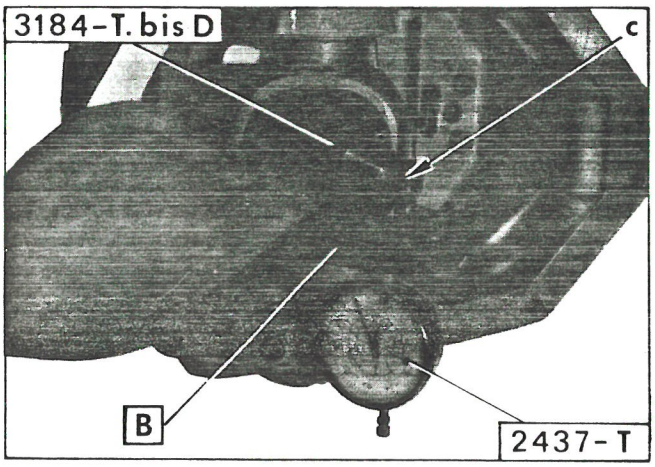

7689

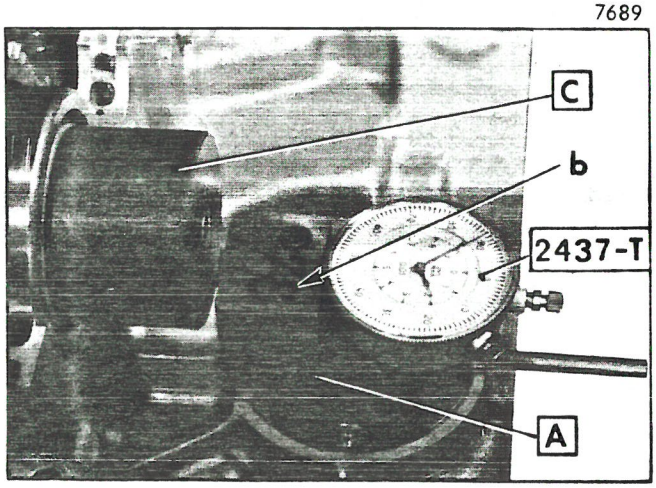

78-667

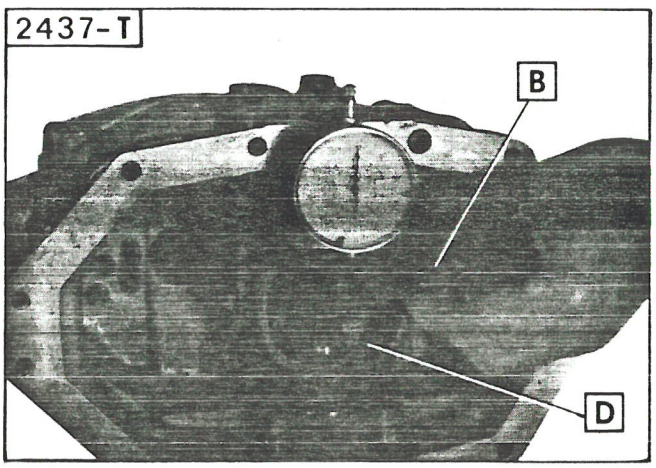

IV. ADJUSTING THE CROWN WHEEL AND PINION

The crown wheel and the bevel pinion are paired and marked with identical inscriptions engraved with an electric scriber on face F1 and F2 of the bevel pinion and on side F3 of the crown wheel (never separate a pair).
Two dimensions are also engraved on side F3 of the crown wheel.
L1 : the distance from the rear of the pinion to intersection point « a » of the crown wheel axes.
L2 : distance between the crown wheel thrust face to intersection point « a » of the crown wheel axes.

1. Adjustment principle :

The bevel pinion must be positioned in relation to the differential axis, and the crown wheel in relation to the bevel pinion axis to give correct meshing of the pinion and the crown.

2. Adjusting the bevel pinion distance L1 :

a) Fit dial gauge 2437-T to support A from kit 3184-T bis
Calibrate the assembly on a surface plate with the large needle opposite the 0 on the dial.
Note the position of the total reading hand.

b) Fit the bevel pinion assembly into the left half-casing. *(Check that the bearing is correctly located on the rear face of the bevel pinion),* and fit the rear cover.

c) Fit cap C and support A fitted with the calibrated dial gauge.

The cap C and support A with the dial gauge in the calibration position corresponds to a distance of K1 + K2 = 78 mm, this dimension is engraved on the support at « b ».

d)Pivot support A and immobilize it at the point at which the large hand changes rotation direction.

e) Return the gauge hands to their calibration position, and then slowly release and count the number of revolutions and fractions of a revolution.

Distance measured E + dimension engraved on the support equals the conical distance.

f) **Take the difference between the dimension engraved on the pinion and the conical. distance found,** and reduce or increase the distance with a thicker or thinner spacer washer E'.

g) The existing washer must be replaced by one of the thickness calculated. Tighten the bevel pinion nut to : **10 to 12 m.daN** (torque wrench), and lock by peening.

3. Adjusting the crown wheel position :

a) Place the left bearing ring (2) into its housing, **without shim.**
Fit the differential casing, the end of mandrel D in « c » engaged in the casing.
Fit the right hand half-casing and the rear cover.
Check that the differential casing is in place and **that race (1) is in contact with the bearing rollers.**

b) Fit the dial gauge 2437-T to rule B , set the position **so that it will operate between 8 and 9 mm.**

The mandrel D and rule B assembly in the calibrated position corresponds to a distance of K3 + R = 35 mm, the dimension engraved on rule B

c) Fit rule B on the casing , pivot the assembly and immobilize at the point at which the big hand changes direction of rotation. Bring the needles to the calibrated position, and then release slowly counting the number of turns and fractions of turns.

The dimension engraved on the rule + dimension measured X = distance from the bearing face to the center line. The difference between the dimension engraved on the crown wheel and the distance found gives the theoretical thickness of the shims.

d) Proceed in the same way for the right hand side. Check that the differential is in place and that the right hand bearing race **is home in the casing,** and that the left hand bearing race **is touching the rollers.**

4. Add the bearing tolerance :

The tolerance is **0.05 mm** for the two bearings.
or : **0.025 mm** per bearing.

a) *The tickness of the left hand side shim :*
Theoretical thickness of the left shim : 0.025 mm.
= **thickness of shim to be fitted to left side.**

b) *Thickness of the right hand side shim :*
Theoretical left hand + theoretical right hand shim thickness + 0.05 mm = **total thickness of shims to be fitted.**
Take the difference between the total thickness of the shims and the left shim already selected :
The total thickness of the shims to be fitted - the left hand shim to be fitted = **thickness of the right hand shim to be fitted.**

V. FITTING

1. Fit the differential :

a) Fit the crown wheel, tighten the bolts (1) **with the face and threads greased, to a torque of 8 to 9 m.daN.**

b) Fit :

- the two planetary gears and hold them in place with the aid of the two gearbox drive outlet shafts,
- the two satellite gears, and line up using the satellite shaft, then withdraw the shaft,

Hold the satellite gears in place by rotating the planetary gears.

Engage the satellite shaft and fit the locking circlips (2) and (3).

2. Fit the gear assembly :

In the left hand half-casing, fit :

- the differential,
- the bevel pinion assembly,
- the primary shaft assembly, turn the needle bearing so that the pin fits into the bearing locking notch.

3. Check the crown wheel and pinion backlash :

NOTE : If the adjustment of the crownwheel and pinion has been carefully carried out, the backlash should be correct.

However, it is preferable to check it.

- Fit the right hand casing and the rear cover.
- Using support 3184-T bis F and dial gauge 2437-T , measure the backlash. It should be between **0.13 and 0.27 mm.**
- Remove the dial gauge, the rear cover and the right hand half-casing.

4. To fit the right hand half-casing :

a) Fit :

- the locking ball (grease beforehand) and the third and fourth gear shaft (6) and fork (8) assembly,
- the spring support plate (7),

> The plate springs (7) are different, the thicker spring should be placed towards the reverse pinion (in the left hand casing).

- the ball-joint (10) *(the guide groove (11) should be in the right hand casing side),*
- the interlock plunger (9).

b) In the right hand casing, use grease to fit the locking ball, the spring and the ball-joint guide.

c) Coat the joint surfaces with LOCTITE FORM-ETANCH.

d) Assemble the casing halves.

e) Fit the bolts (round washer under the head); the bolts heads (j and p) should be fitted on the left hand casing side *(fit normal nuts (16) onto these bolts).*

Screw up without tightening.

f) Fit the rear cover, the gasket seating surface smeared with LOCTITE FORMETANCH, do up the contact bolts (flat washer under heads) without tightening.

g) Carry out final tightening of the half-casing assembly bolts.

> **Comply with the tightening sequence shown on the diagram.**

Torque : 1.4 to 1.5 m.daN.

h) Tighten the rear cover bolts.

Torque : 2.5 to 3 m.daN.

5. Fit the clutch housing :

With LOCTITE FORMETANCH on the joint surfaces,

Torque : 1.4 to 1.5 m.daN (flat washer).

6. Fit :

- the locking ball (4) and spring (5),
- the blanking disc,
- the pin (13),
- the selector lever (15) and pin it (MR. 630-31/84 B), fit the rubber sheath (14).

7. Fit the gearbox output seals (12) using tool 4039-T

8. Fit :

- the gearbox output drive-shafts (18) *(copper washer under bolt heads)*

Torque : 1.1 m.daN.

> Check that the planetary gears are correctly located and that on assembly the teeth of the gearbox drive outlet shafts are engaged in the teeth of the planetary gears (turn the gearbox drive outlet shafts by hand in the same direction, and the differential crown wheel should turn).

9. Fit :

- the support-brackets (17), tighten to a torque of **2.1 to 2.8 m.daN.**
- the draining, level and blanking plugs. Tighten to a torque of **3.5 to 4.5 m.daN** (copper seal),
- the reversing lamp switch (if fitted)

Tighten to **1.2 to 1.5 m.daN.**

78-668

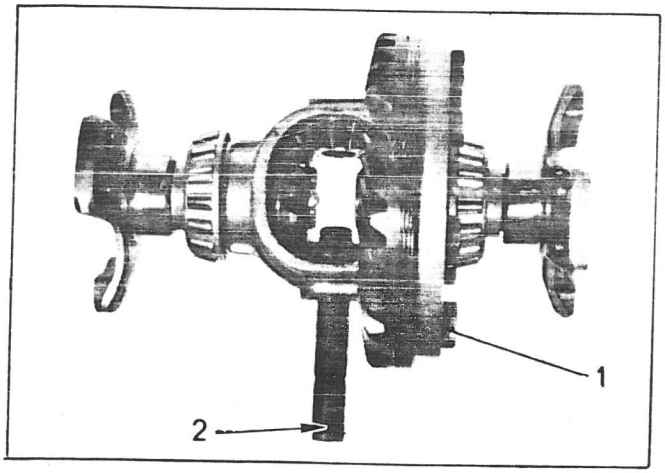

78-720

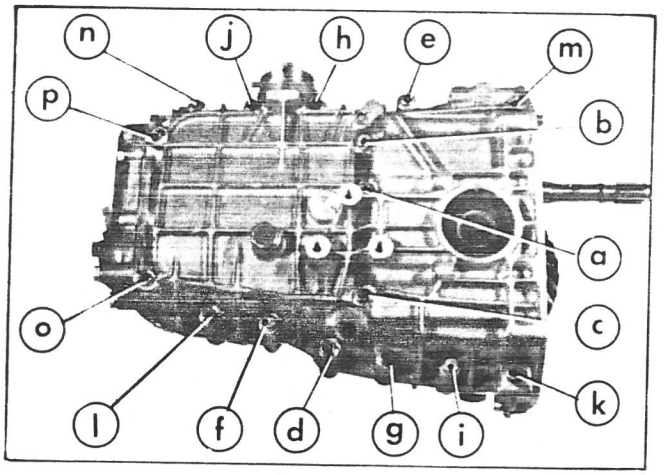

76-884

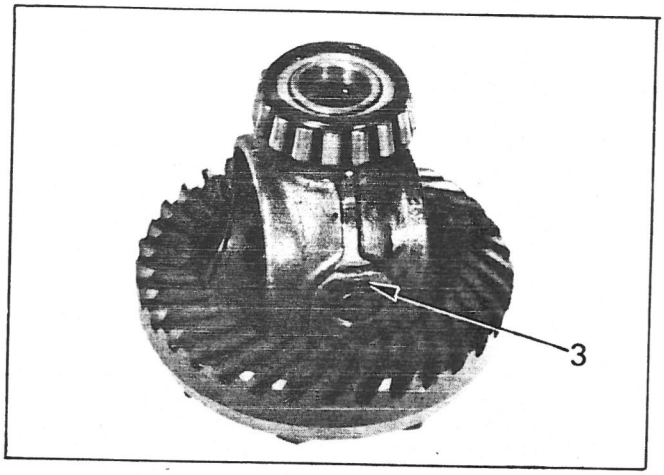

78-720

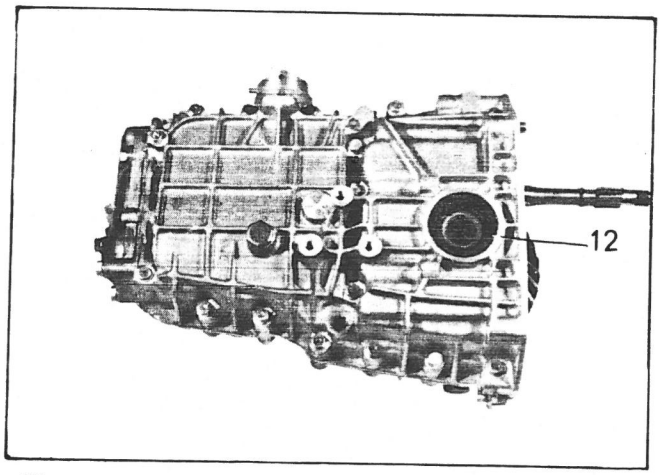

78-665

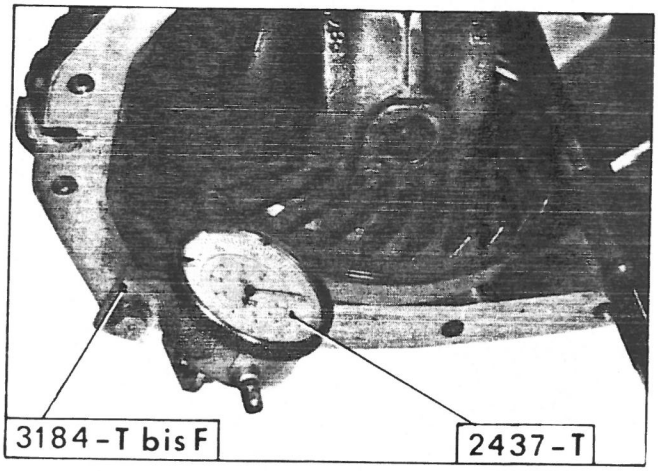

78-660

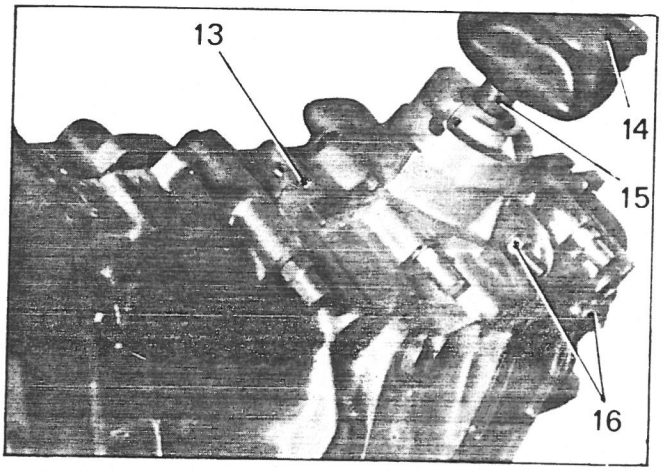

78-719

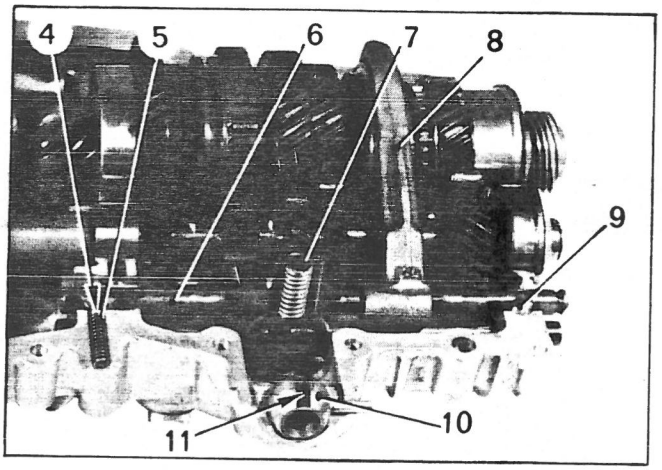

78-663

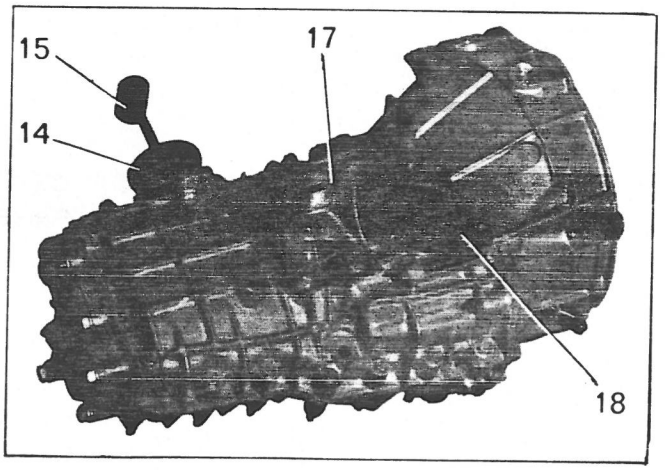

OPERATION
VD1. 434-3 a

RECONDITIONING A FRONT SUSPENSION UNIT

SPECIAL TOOLING

TOOLS SOLD

KIT 8.0908-T

A : Spring compressor

C : Shock absorber support bracket

F : Front shock absorber rod top nut spanner set
(use 22 mm socket)

4045-T : Shock absorber rod clamp

TIGHTENING TORQUES

Recommended tightening torque :

Tightening point	Torque in m.daN
Shock absorber rod nut	4 to 5

76-222

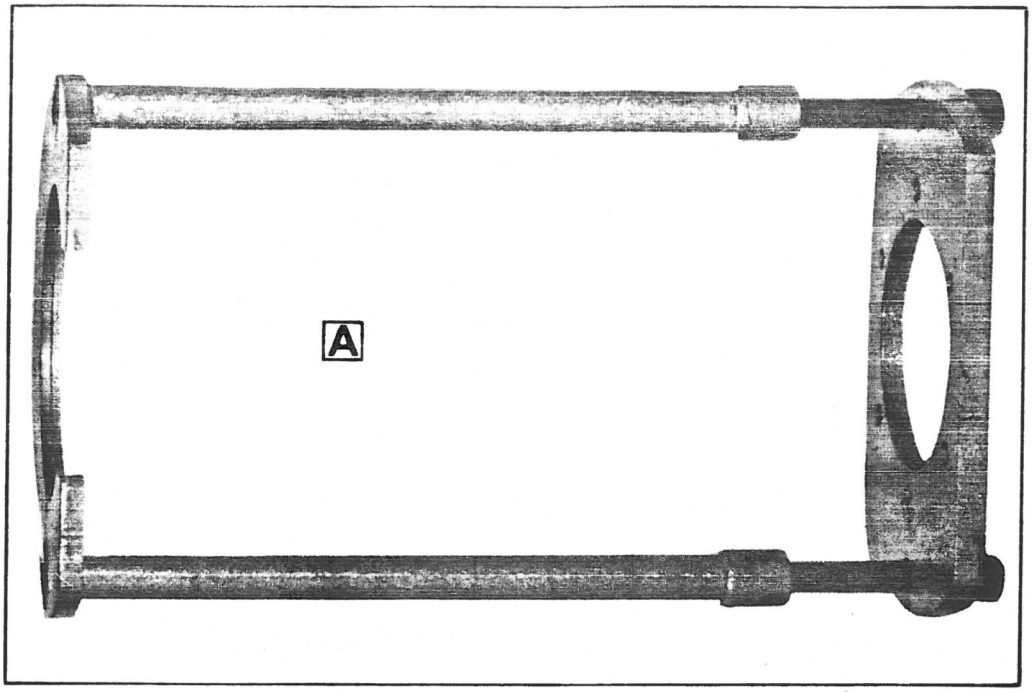

76.222

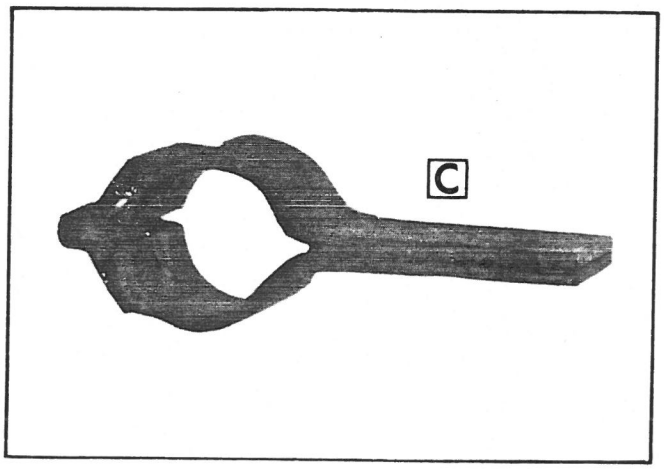

76.217

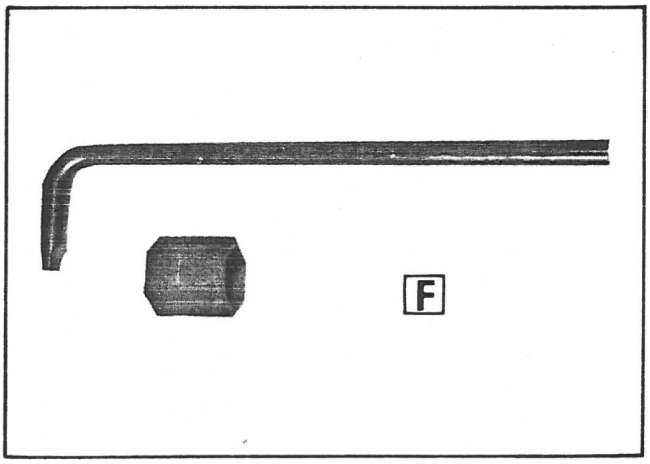

4045-T ♦ 79-118

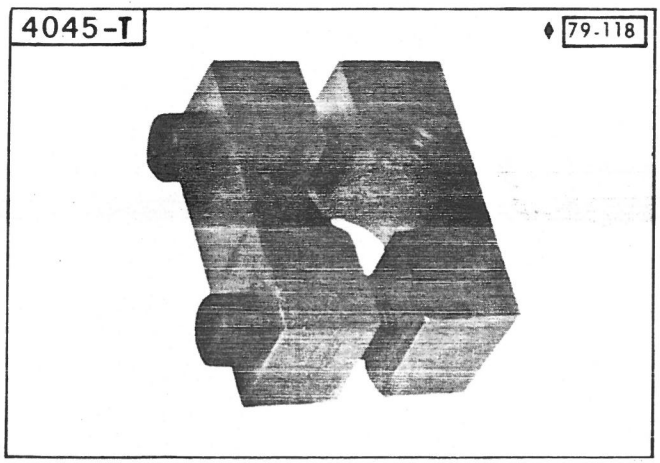

78-556

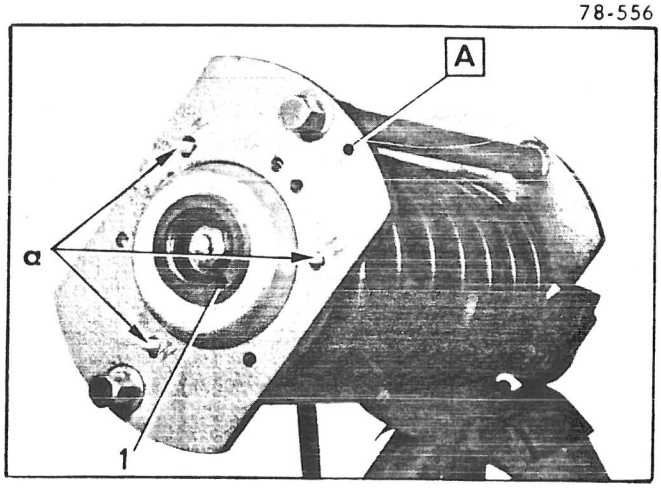

78-571

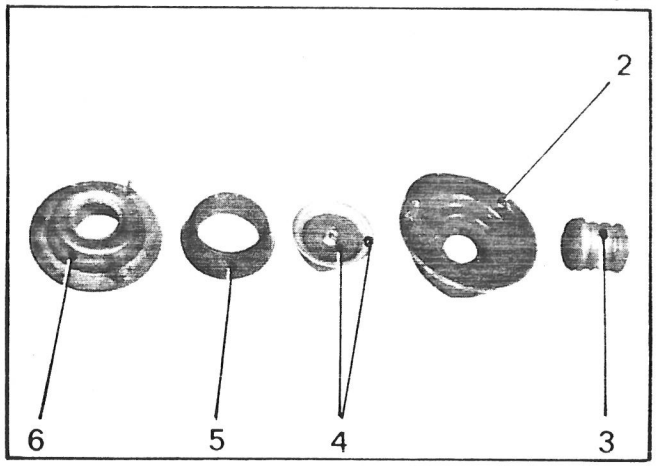

78-554

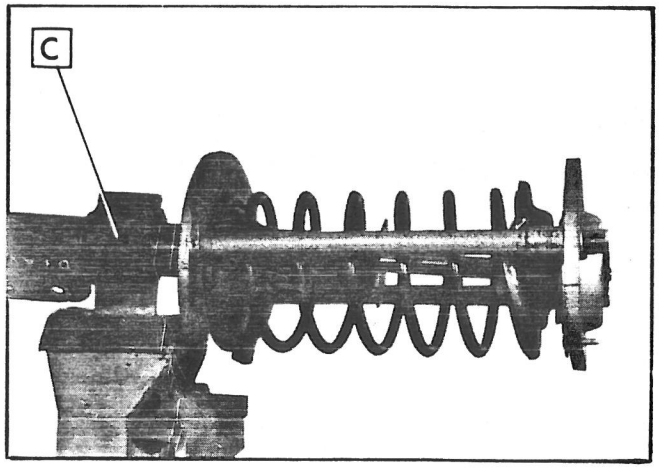

78-568

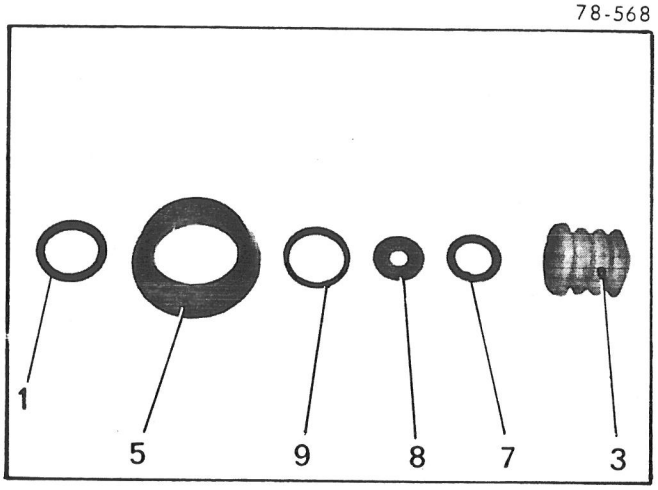

78-779

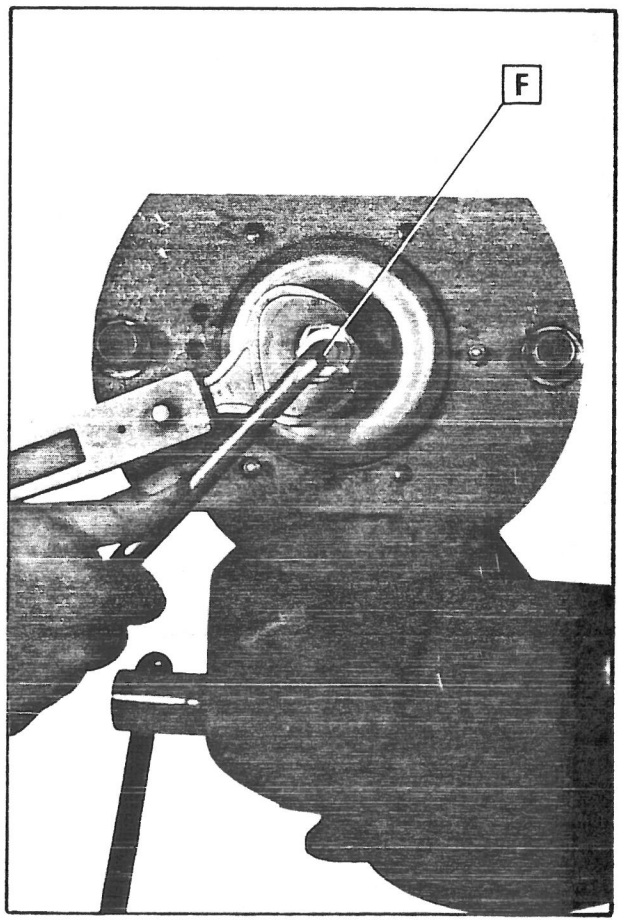

78-561

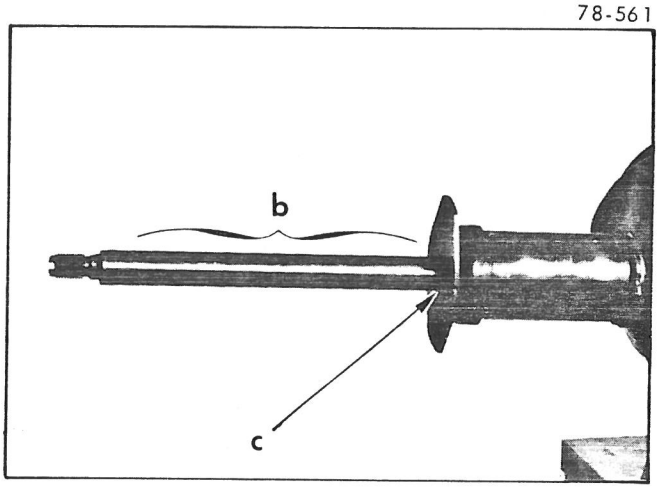

78-564

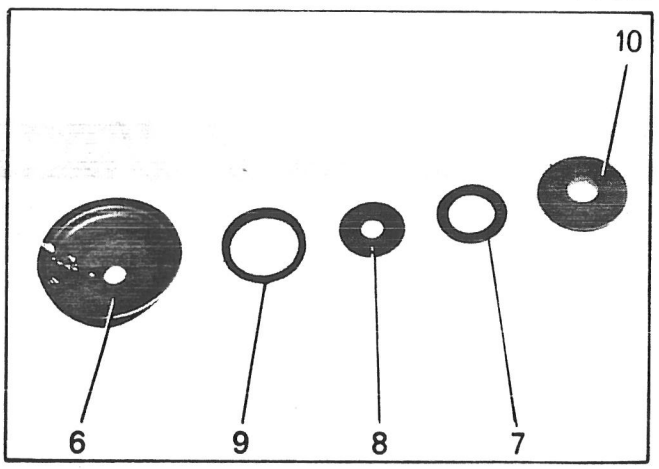

RECONDITIONING A FRONT SUSPENSION UNIT

REMOVAL.

1. Fix the suspension unit in the vice (support [C]).
Fit the compressor [A] : **the three upper support bolts should be engaged in the large holes « a » in the plate** *(only one position is possible).*

2. Fully compress the spring.

3. Remove the shock absorber rod nut, immobilize the shaft with spanner [F] (use a 22 mm socket).

Never remove a shock absorber rod nut without the spring compressor tool [A]
(dangerous decompression of the spring).

4. Remove the cup and its rubber ring (1). Release the spring and remove the compression tool [A]

5. Remove :
- the top cup (6),
- the flexible bush (5),
- the cup (4) and thrust needle bearing assembly,
- the spring mounting upper cup (2),
- the stop (3),
- the spring.

FITTING

6. Systematically renew :
- **the stop (3),**
- **the thrust needle bearing (7) and its washer (8),**
- **the seal (9),**
- **the flexible bush (5),**
- **the rubber ring (1).**

7. If the shock absorber is to be reused, check that the rod is not bent or scratched (maximum permitted out of round 0.5 mm), on the contact surface « b ».
Check the seal at « c ».

8. Prepare the thrust needle bearing assembly :
- Fit the thrust needle bearing (7) to the pre-greased flange (10) (TOTAL MULTIS MS).
- Fit the washer (8) and the seal (9) onto the stop (7).
- Fit this assembly into the cup (6).

9. Prepare the top assembly :

Fit :
- the flexible bush (2),
- the thrust needle bearing assembly (1).

10. Fitting the spring-cup assembly

The two front suspension units should be fitted with identically set springs (same colour reference mark).

Under a load of 237 kg :
Height under 230 mm : blue mark.
Height over 230 mm : blue and red mark.

a) Fit the following components between the plates of the compression tool [A] :
- the spring (5),
- the upper cup (4) and upper shock absorber plate (3) assembly *(the end of the coil in contact with shouldering « a »).*

b) Fit the shock absorber in the vice (support [C])

c) Offer up the assembly to the shock absorber when engaging the compression tool [A] plate behind the lower cup (6) of the shock absorber *(the end of the coil should be in contact with shouldering « b »).*

d) Fit the assembly clamp [4045-T] but do not tighten.
Fit the stop (7).
With the shock absorber rod at its maximum travel length, moderately tighten the assembly clamp bolts [4045-T] .

e) Compress the assembly by tightening bolts (8) on tool [A] and insert the shock absorber rod into the upper cup and endplate assembly.
Compress tool [A] (→) in order to line up the shock absorber rod with the endplate holes.

f) Check that the shock absorber rod is correctly positioned at « c ».

11. Fit :
- the cup (9) and its rubber ring,
- the nut, holding the shock absorber rod in position (spanner [F] ,use a 22 mm socket), **torque : 4 to 5 m.daN.**

12. Fit the stop (7) into the upper plate (4). Remove the compression tool [A] and clamp [4045-T] .

78-570

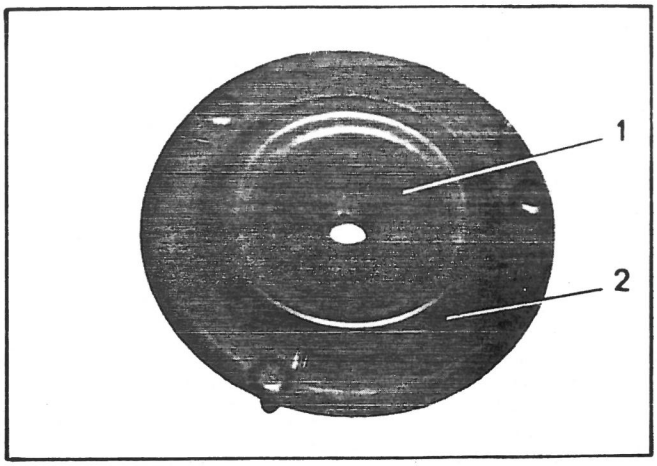

78-560

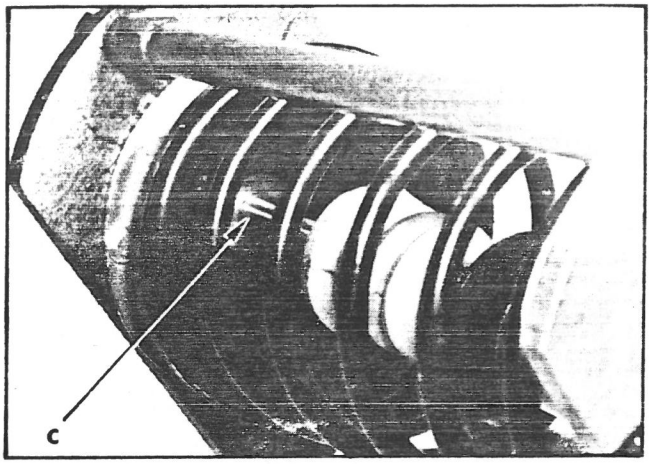

78-552

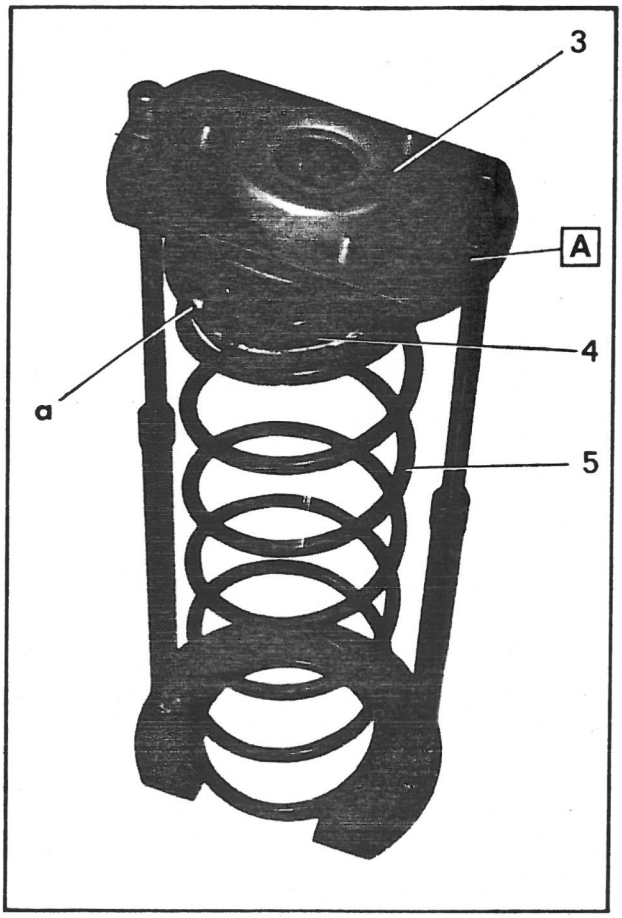

78-556

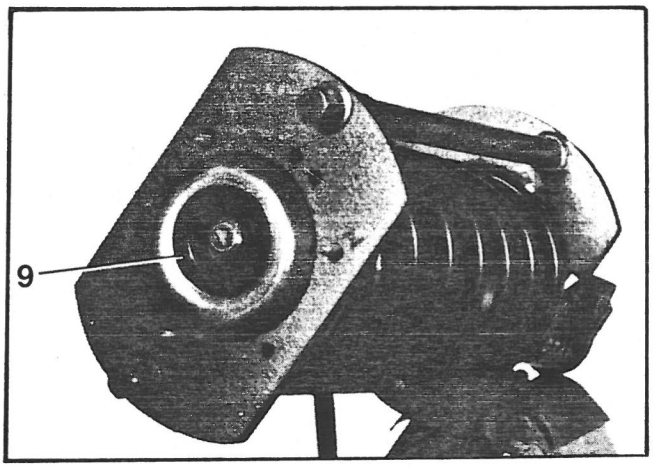

V 43-3

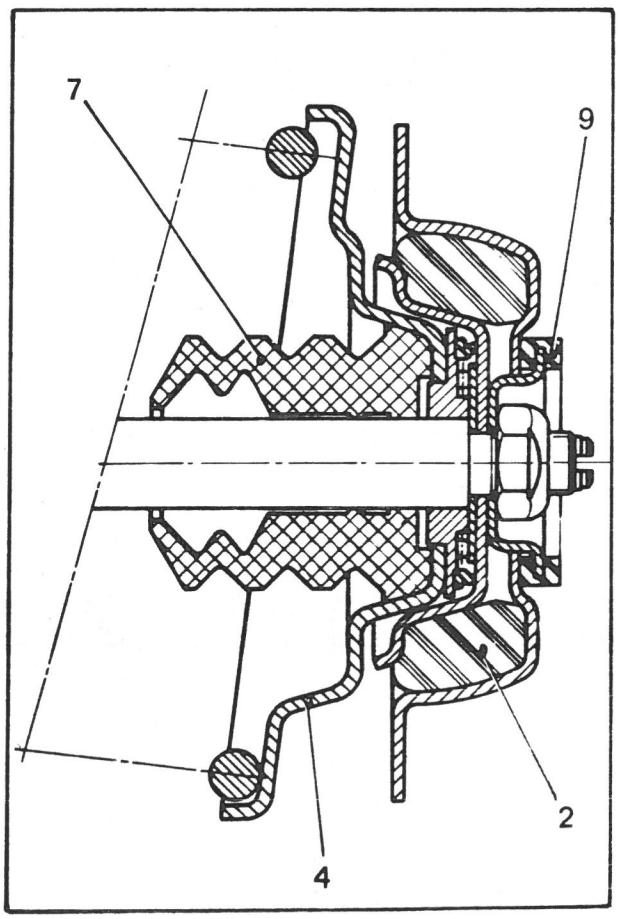

79-113 ♦

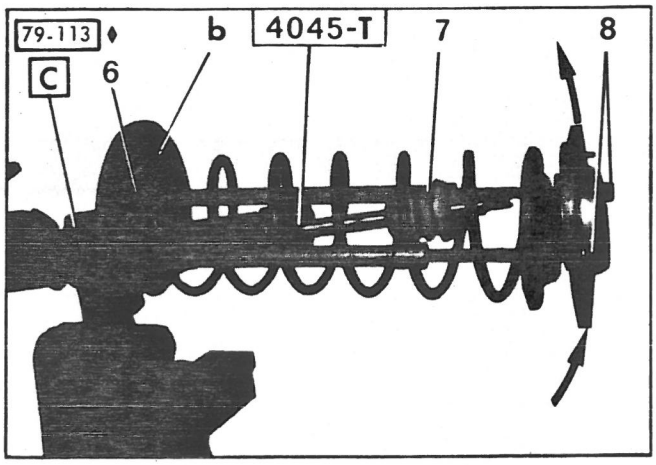

OPERATION
VD1. 434-3 b

RECONDITIONING A REAR SUSPENSION UNIT

SPECIAL TOOLING

TOOLS SOLD

Kit 8.0908-T

A : Spring compressor consisting of :
A1 : Press
A2 : Intermediate plate

C : Shock absorber support consisting of :
C1 : Bracket
C2 : Sleeve

B : Shock absorber rod clamp

J : Rear shock absorber rod locking spanner

TIGHTENING TORQUES

Recommended tightening torques :

Tightening point	Torque in m.daN
Shock absorber rod Nylstop nut	1.5 to 1.8

76-222

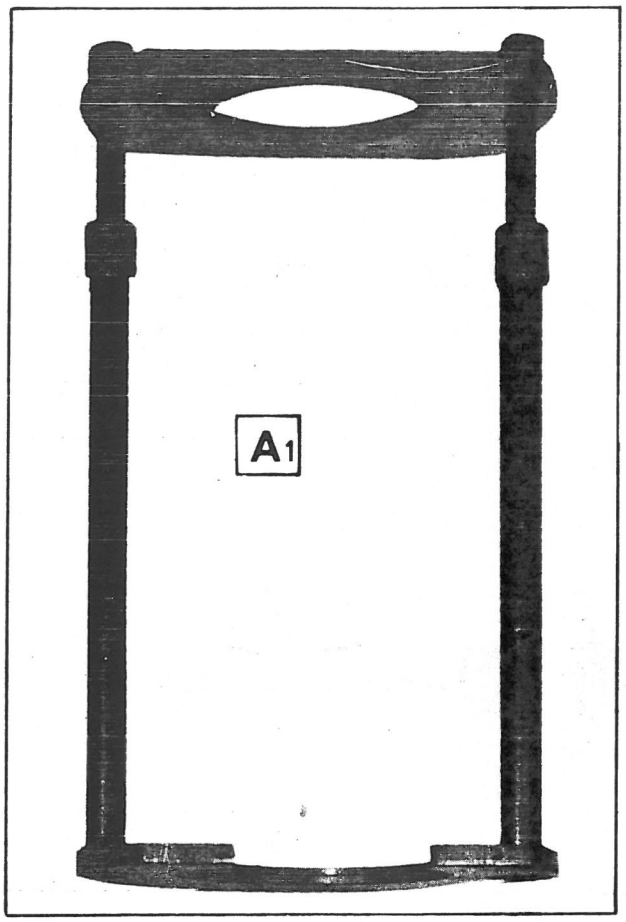

76-222

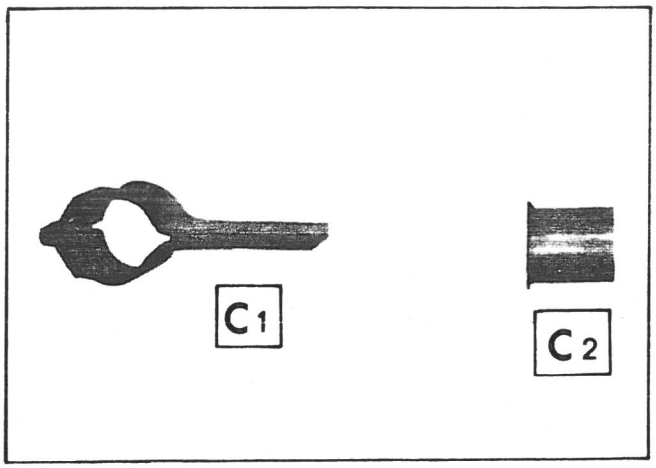

76-211

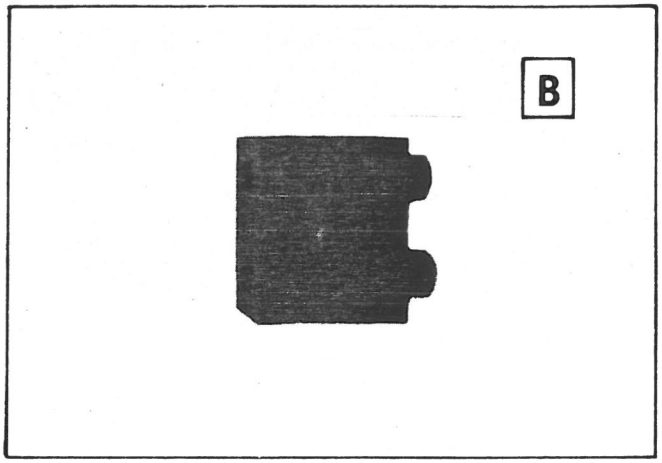

76-211

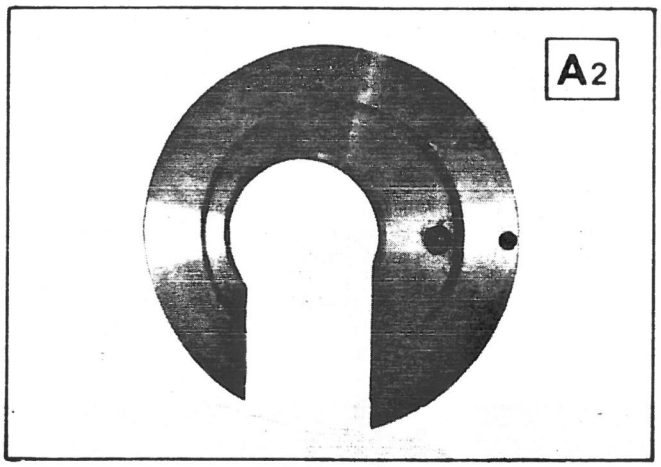

76-211

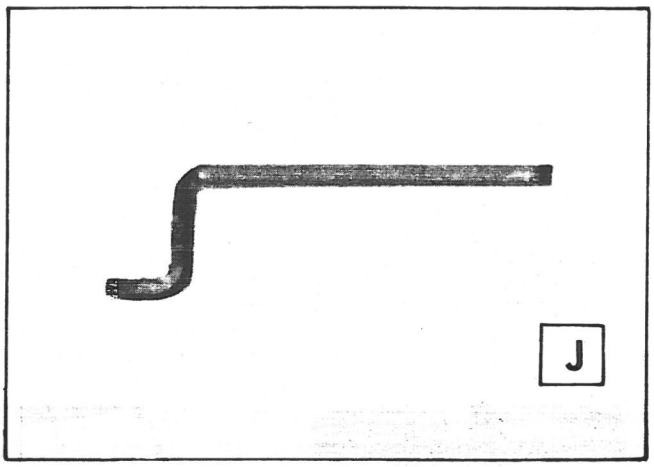

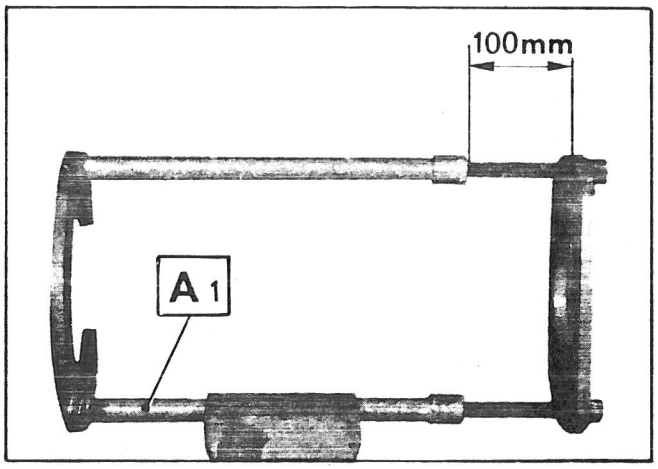
100mm
A1

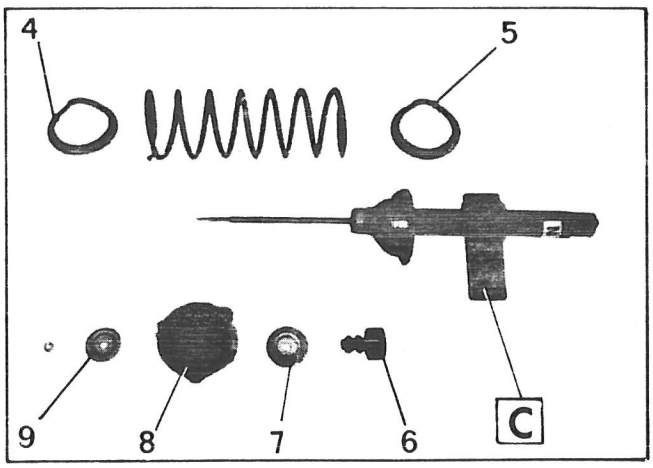
4
5
9
8
7
6
C

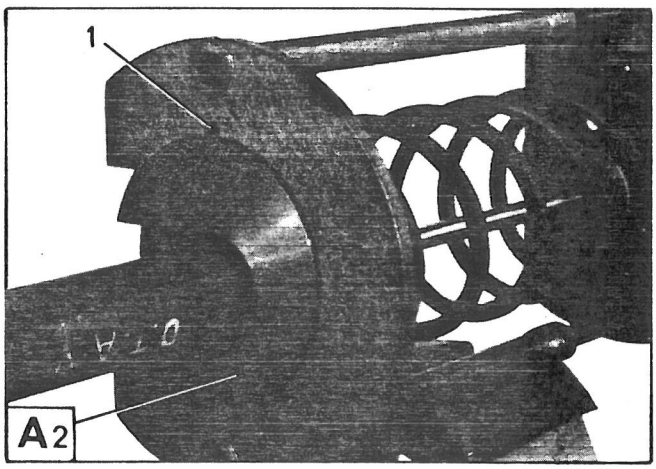
1
A2

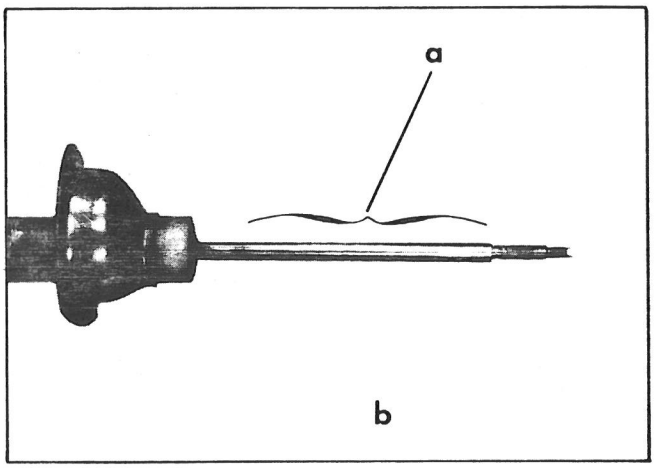
a
b

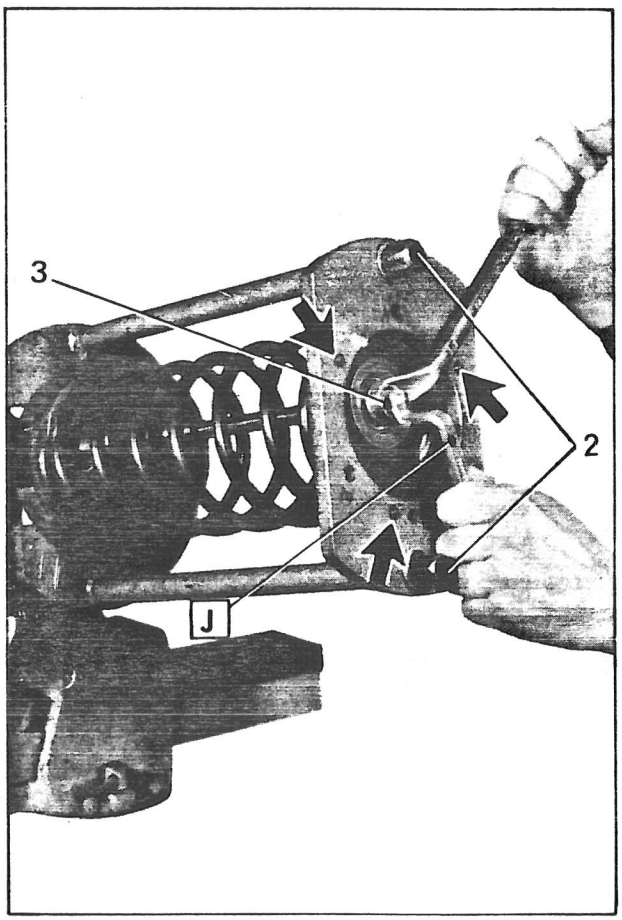
3
2
J

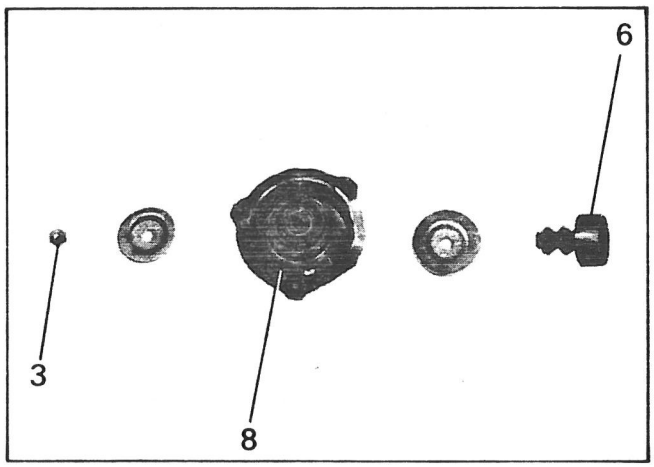
6
3
8

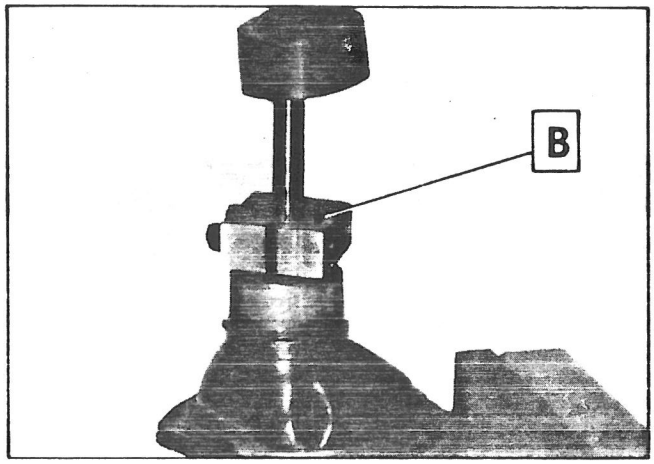
B

RECONDITIONING A REAR SUSPENSION UNIT

REMOVAL

1. Fix the spring compression tool [A1] in the vice and unscrew the rods approximately 100 mm.

2. Center the intermediate plate [A2] as best as possible on the lower cup of the shock absorber and locate the assembly between the plates of tool [A1], with pin (1) in the corresponding slot.
Three upper support bolts should be engaged in the small holes (➔) in the plate *(only one position is possible).*

3. Fit the suspension unit into the vice (assembly [C] support and sleeve).

4. Tighten the rods home (2).

Never remove the shock absorber rod nut (3) without using a compressor (dangerous decompression of the spring).

5. Hold the shock absorber rod using locking spanner [J] and remove the nut (3).

6. Remove :
- the cup (9).

Decompress the spring and remove :
- the upper support (8) and its rubber cup (4),
- cup (7),
- the spring,
- the rubber cup (5),
- the bellows (6).

ASSEMBLY

Only use clean and faultless parts.

7. Extend the shock absorber rod to the maximum.
Visually check :
- the rod seal at « b »,
- the shock absorber rod.

There should be no scratches or dents on friction surface « a ».
There should be no buckling and the thread should be intact.

8. Systematically renew :
- **the protective bellows (6),**
- **the upper support (8),**
- **the spring support rubber cups,**
- **the shock absorber rod nut (3).**

9. Lock the shock absorber rod in the maximum extension position using clamp [B]

10. Place on the shock absorber rod :
- the protective bellows (1),
- the cup (2) (hollow side facing bellows),
- the rubber cup (7),
- the spring, with the end of the coil against the shouldering designed for this purpose.

The two rear suspension units should be fitted with identical set springs (same color reference).

Under a load of 230 kg :
- Height under 220 mm : blue mark
- Height over 220 mm : white mark.

11. Fit the top support (3) fitted with its rubber cup, with the end of the coil against the shouldering designed for this purpose.

12. Locate the compression tool as described for removal and tighten bolts (6) checking that the shock absorber rod is correctly inserted in the upper support (3).

13. Fit :
- the upper cup (4) (hollow side towards the outside),
- the Nylstop nut (5) and tighten to : **1.5 to 1.8 m.daN** while holding the shock absorber rod in position with spanner [J]

14. Remove the tooling.
Fit the rubber bellows (1).

77-547

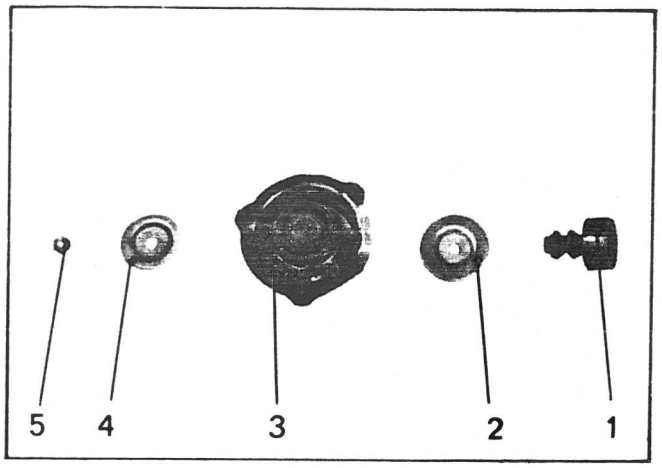

77-546

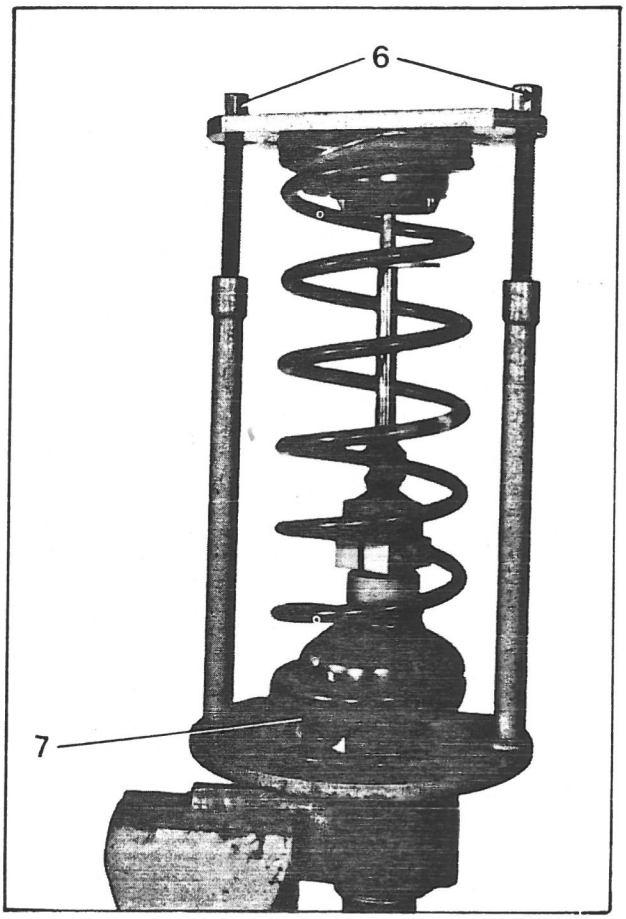

77-549

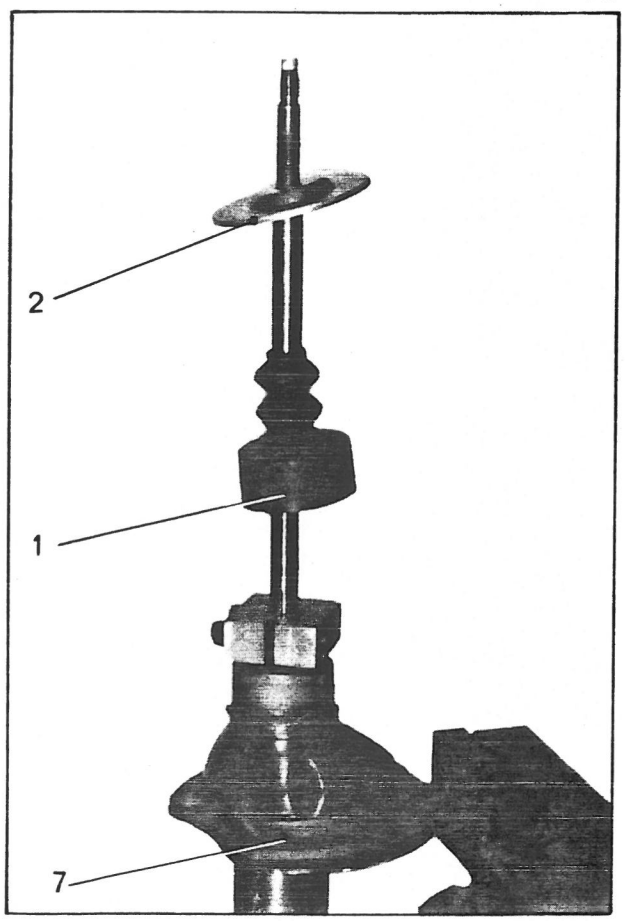

LIST OF VD2 OPERATIONS IN SECTION III

Operation number	DESCRIPTION
	RECONDITIONING
VD2. 100-3	Reconditioning an engine
VD2. 315-3	Working on the transfer gear assembly : I : Renewal of ball bearing or shaft II : Renewal of the intermediate gear needle bearing III : Renewal of the engine drive shaft seal
VD2. 330-3	Reconditioning the gearbox
VD2. 434-3 a	Reconditioning the front suspension unit
VD2. 434-3 b	Reconditioning the rear suspension unit

OPERATION
VD2. 100-3

RECONDITIONING AN ENGINE

SPECIAL TOOLING

TOOLS SOLD

KIT 8.0132-T

A : Cylinder liner fixing clamps comprising :

- A1 : Clamps
- A2 : Bolts

B : Cylinder liner adjusting plate

D : Gudgeon pin assembly tooling comprising :

- D1 : Base
- D2 : Thrust washer
- D3 : Drift with guide

E : Dial gauge mounting comprising :

- E1 : Support rod
- E2 : Dial gauge support
- E3 : Extension

C : Dial gauge support

L : Crankshaft bush fitting mandrel

F : Timing cover centering ring

G : Right hand seal assembly mandrel

H : Left hand seal assembly ring

J : Left hand seal extractor comprising :

- J1 : Plate with set of two bolts
- J2 : Special drill
- J3 : Set of two self-tapping screws

78-329

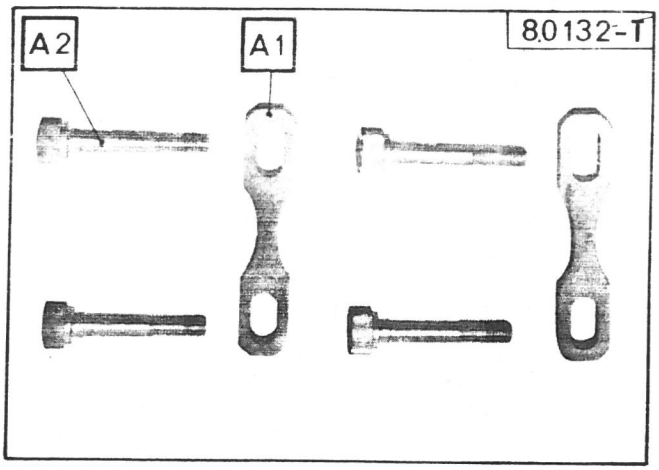

78-332



78-331

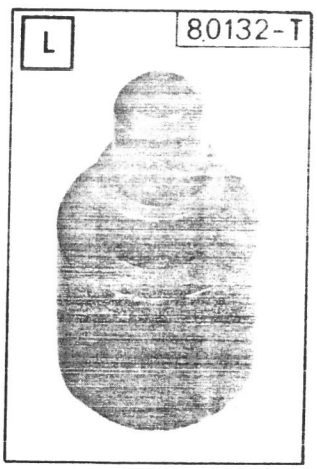

78-324

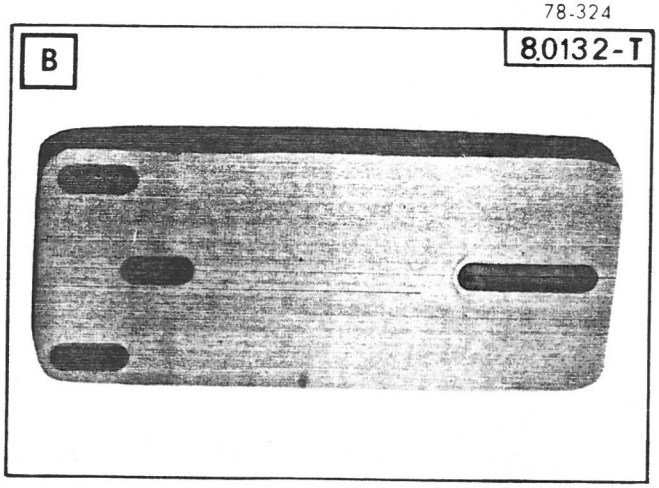

78-326

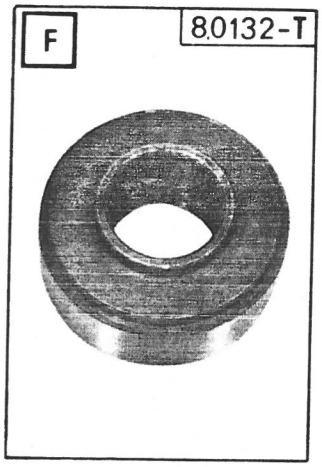

78-333

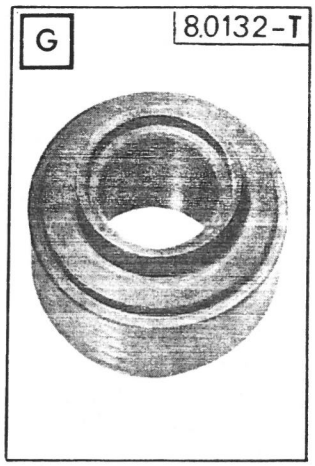

78-320

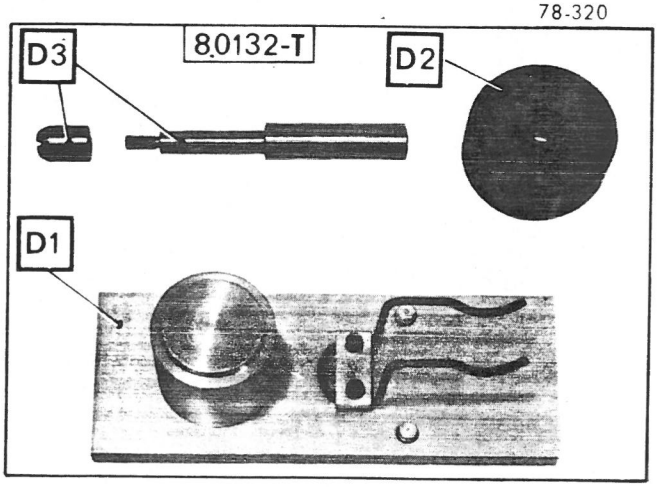

78-330

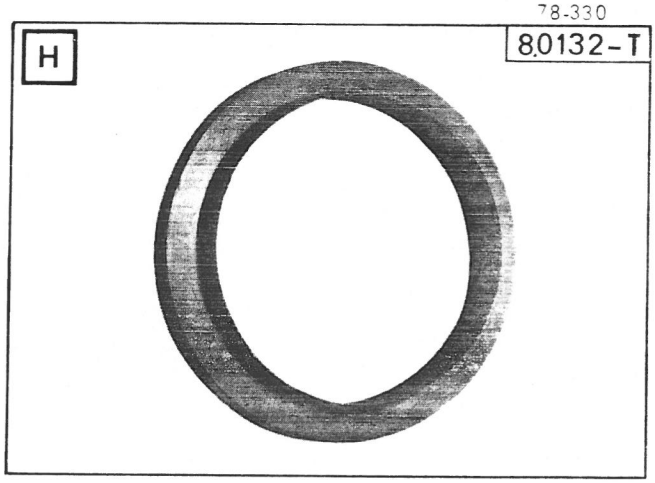

78-328

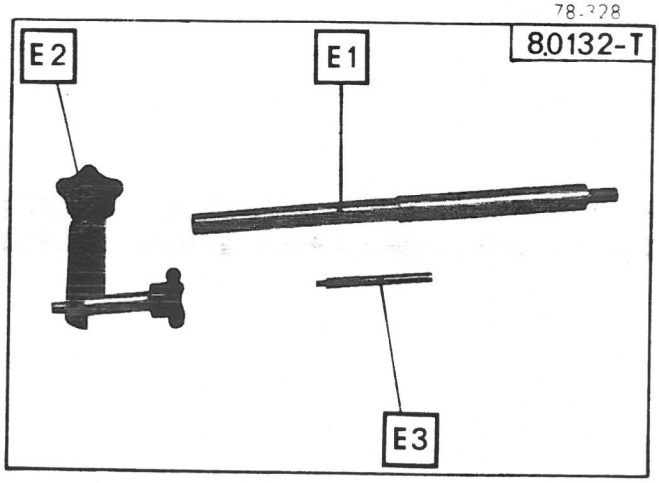

78-331

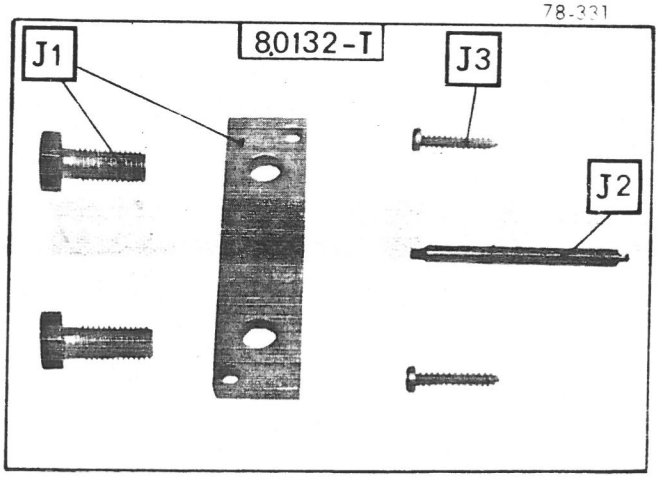

78-323

8.0132-T

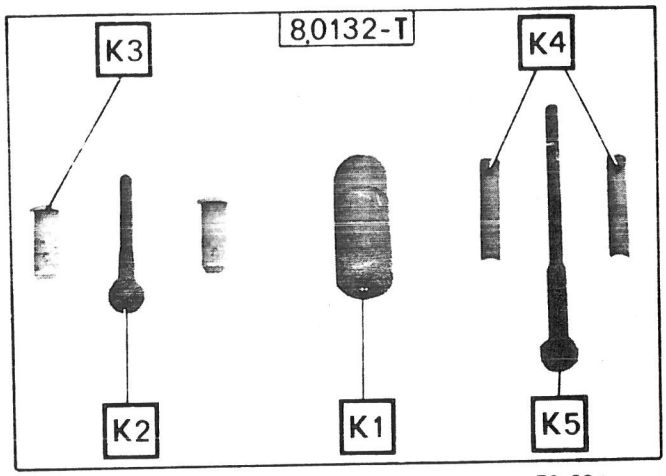

78-322

8.0313-T

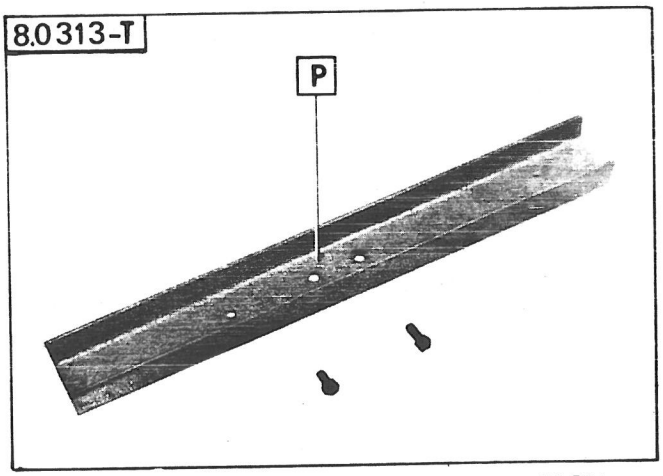

78-524

8.0132-T

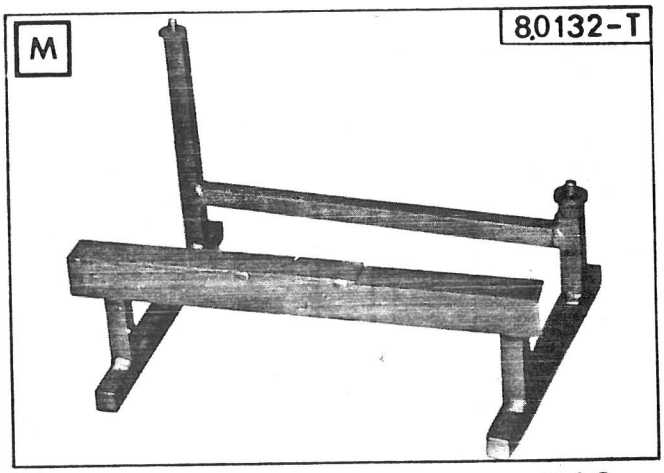

78-754

8.0130-T

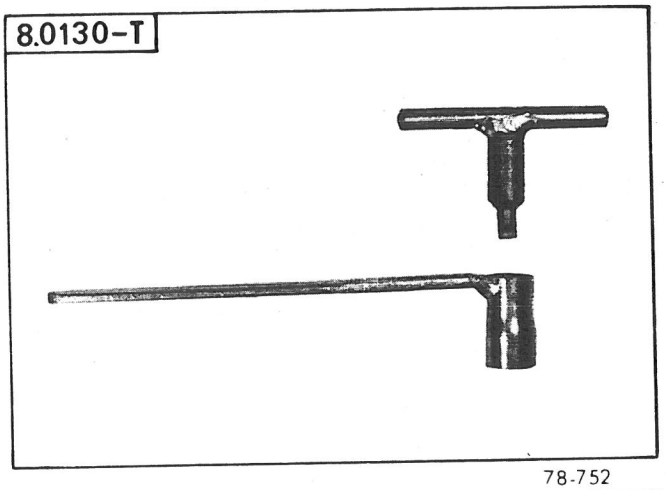

78-367

8.0133-T

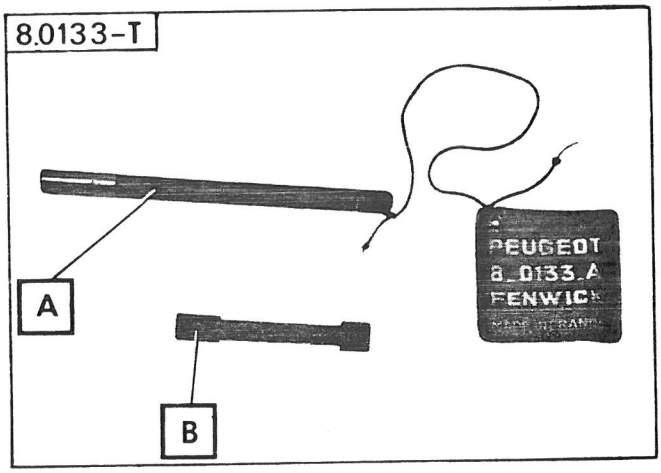

78-752

28.301-T

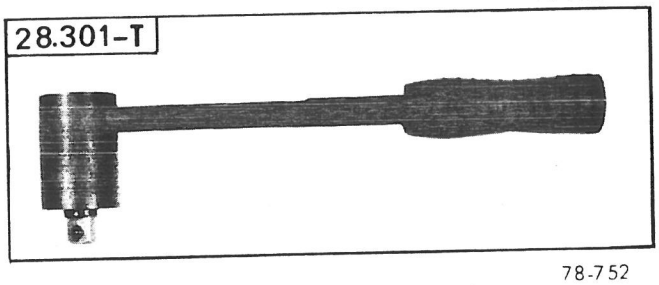

78-752

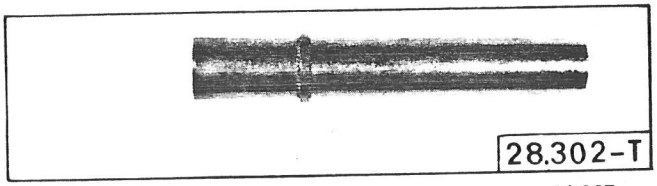

28.302-T

78-365

8.0209-T

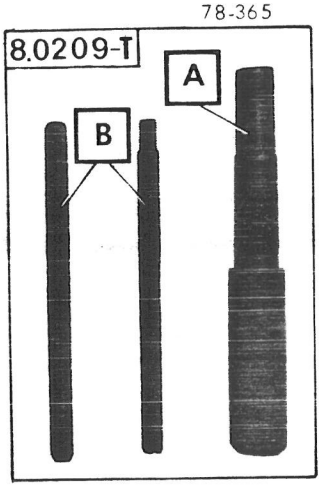

78-325

8.1403-T

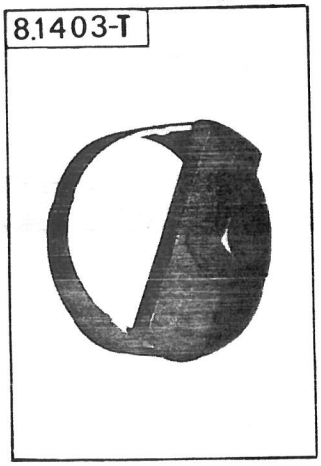

12827

2437-T

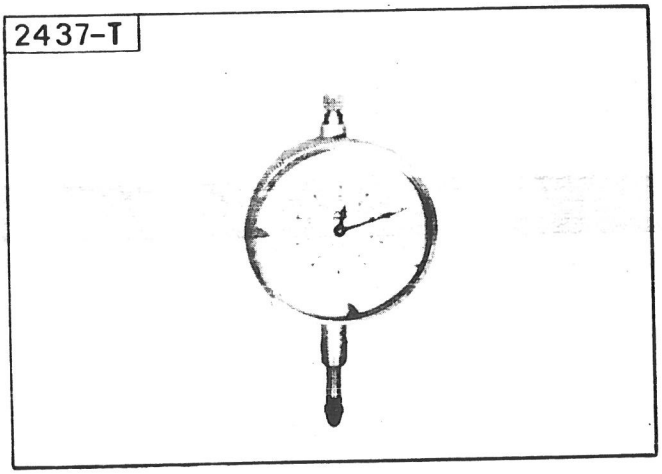

SPECIAL TOOLING

TOOLS SOLD (continued)

KIT 8.0132-T (continued)

[K] : Right hand seal and crankshaft bush extractor comprising :

- [K1] : Body
- [K2] : Short bolt
- [K3] : Grips for seal
- [K4] : Grips for bush
- [K5] : Long bolt

[M] : Engine-gearbox unit stand

8.0133-T [A] : Top dead center pin

8.0133-T [B] : Adapter for removal and fitting of the indicator hole access plug and the drain plug

8.0209-T [A] : Clutch centering mandrel

8.0209-T [B] : Set of guides for fitting the clutch housing

8.1403-T : Cartridge spanner

8.0313-T [P] : Clutch housing or gearbox support

8.0130-T : Key for rocker adjustment

28.301-T : Spark plug torque spanner

28.302-T : Plug spanner

2437-T : Dial gauge

TIGHTENING TORQUES

Compulsory tightening torques (torque wrench)

Tightening point	Torque in m.daN
Cylinder head tightening bolts :	6.5 to 7
Connecting rod cap bolts :	3.5 to 4
Flywheel mounting bolts :	6.5 to 7
Crankshaft pulley nut *(locking tab)* :	13 to 15
Bearing cap casing bolt *(flat washer)* :	5 to 5.5
Camshaft gear and petrol pump eccentric mounting bolts :	7 to 8

Recommended tightening torques :

Tightening point	Torque in m.daN
Drain plug *(copper seal)* :	2.5 to 3
Exhaust manifold attachment nuts :	1.25 to 1.75
Cylinder block water drain plug :	3 to 4.5
Cylinder head temperature switch :	4 to 5
Oil pressure switch :	4 to 5
Rocker adjusting lock nut :	1.5 to 2
Timing cover mounting bolts :	1 to 1.5
Gearbox to cylinder casing assembly bolts :	1.25 to 1.5

RECONDITIONING AN ENGINE

REMOVAL

1. Fix the gearbox to support **8.0313-T.P** and then tilt the engine-gearbox assembly to rest it on the support.

2. Remove :
- the flexible support (2),
- the starter motor (3)
- the oil gauge,
- the belt,
- the alternator (4) and the tension plate (5),
- the cartridge (1) spanner **8.1403-T**
- the water pump (6),
- the fuel pump (7),
- the carburettor-air filter assembly and spacer (11) note the position, with flat « a » facing downwards,
- water temperature switch (9) and oil pressure switch (10),
- the distributor (8) and its harness.

3. Remove :
- the clutch housing attachment bolts (12), *there is one bolt at « b »*,
- the clutch housing (12) (tap gently with a mallet on bosses « c » and « d » to facilitate release),
- the clutch mechanism (13) and its plate,
- the engine flywheel (14).

NOTE : Noting the flywheel position is not necessary since the bolt holes only enable one assembly position.

4. Remove :
- the bolts (15) and nut (16),
- the bolts (➡).

78-237

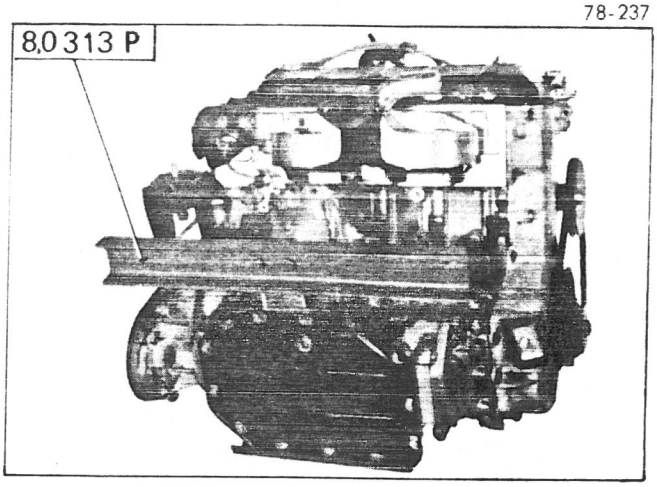

78-231

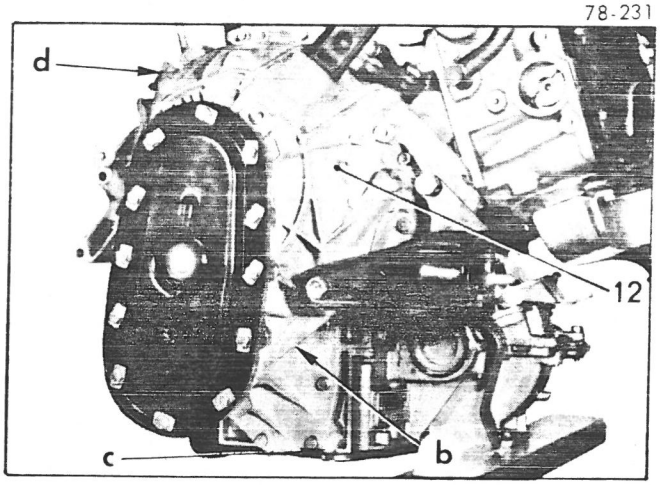

78-235

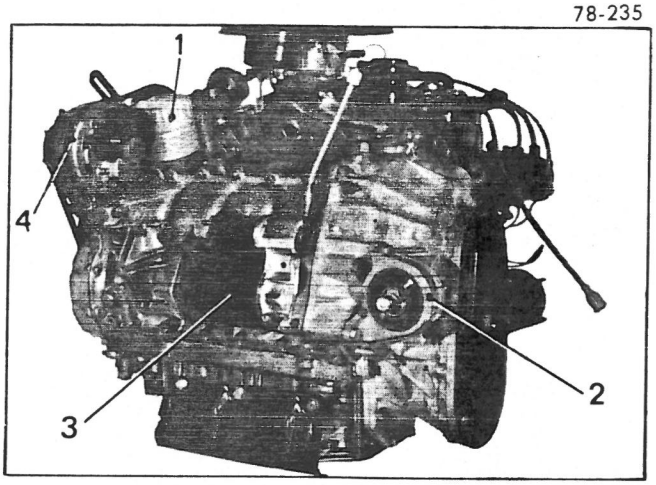

78-272

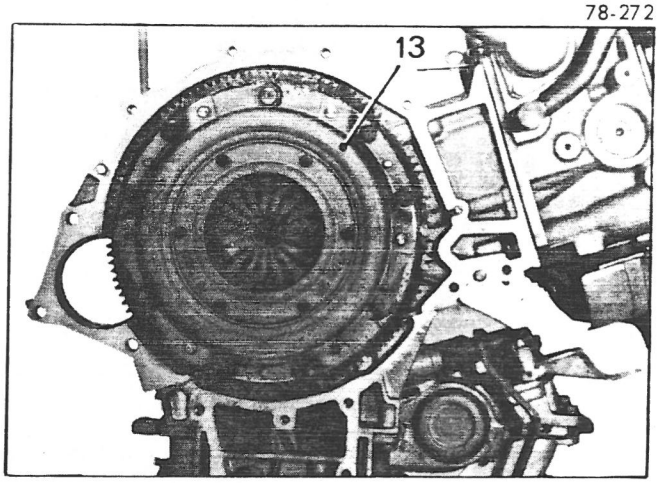

78-233

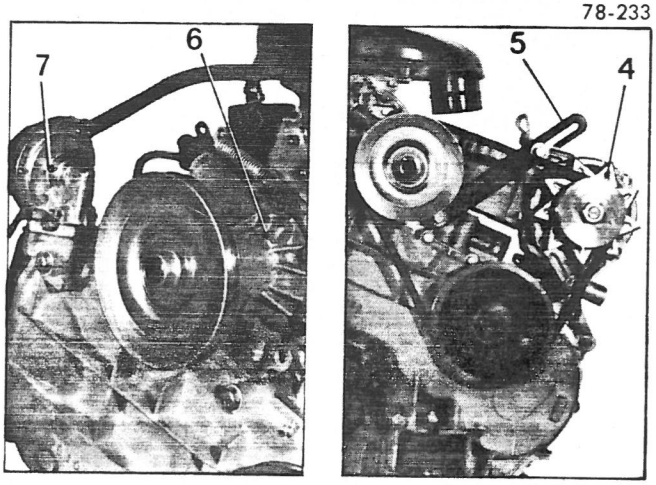

78-271

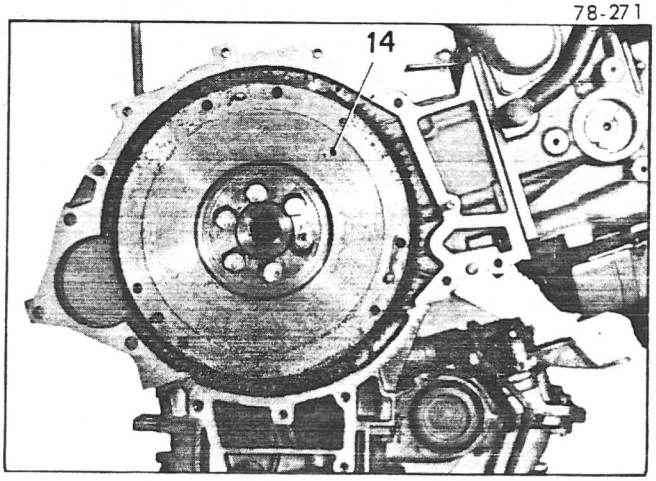

78-234

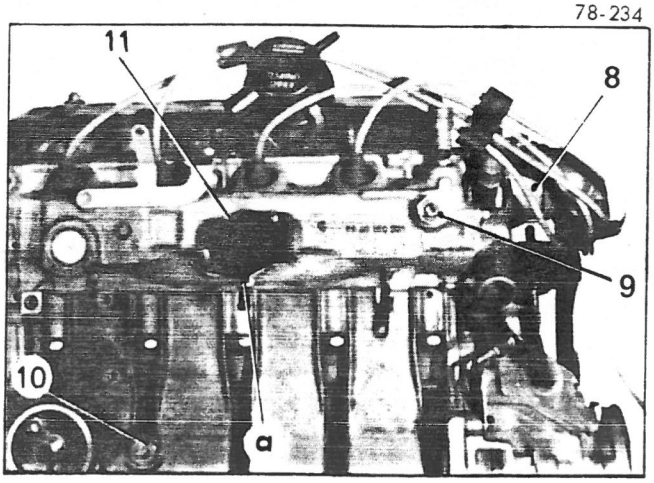

78-268

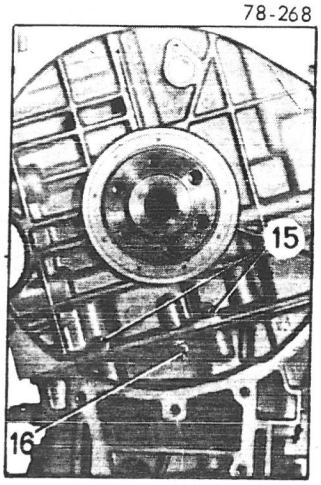

78-269

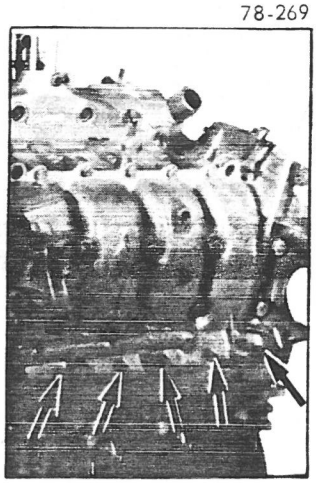

78-267

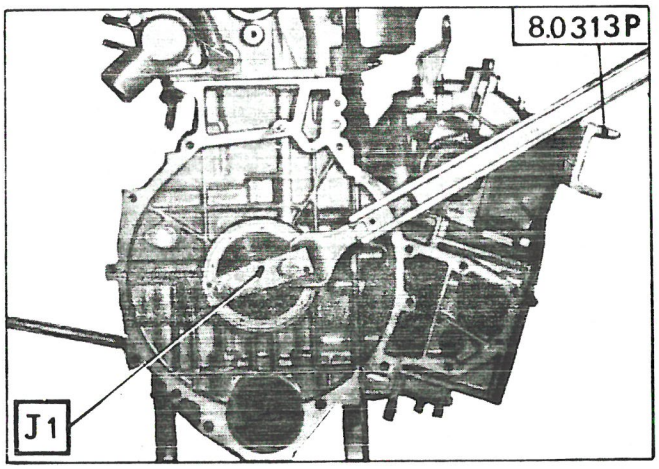

78-270

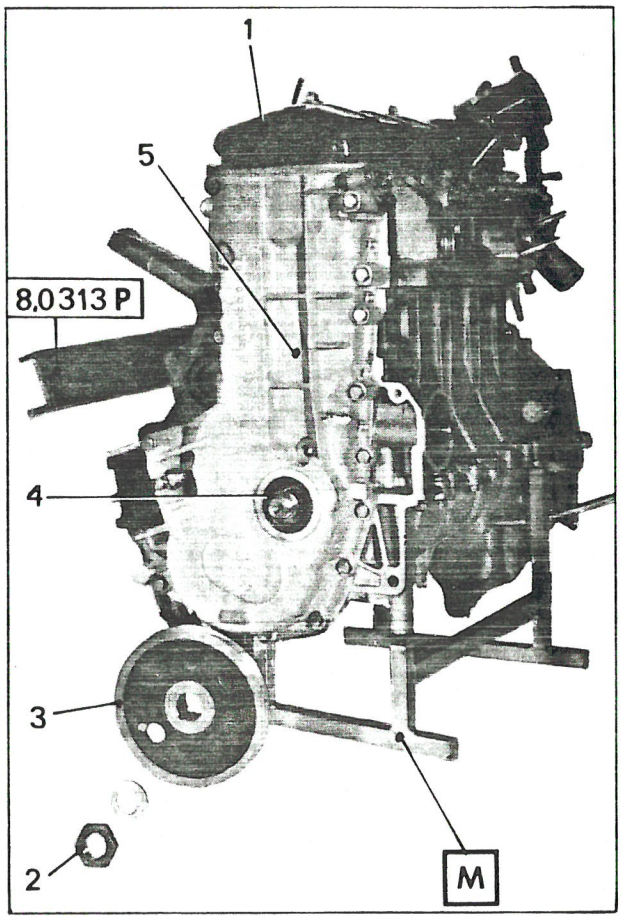

78-285

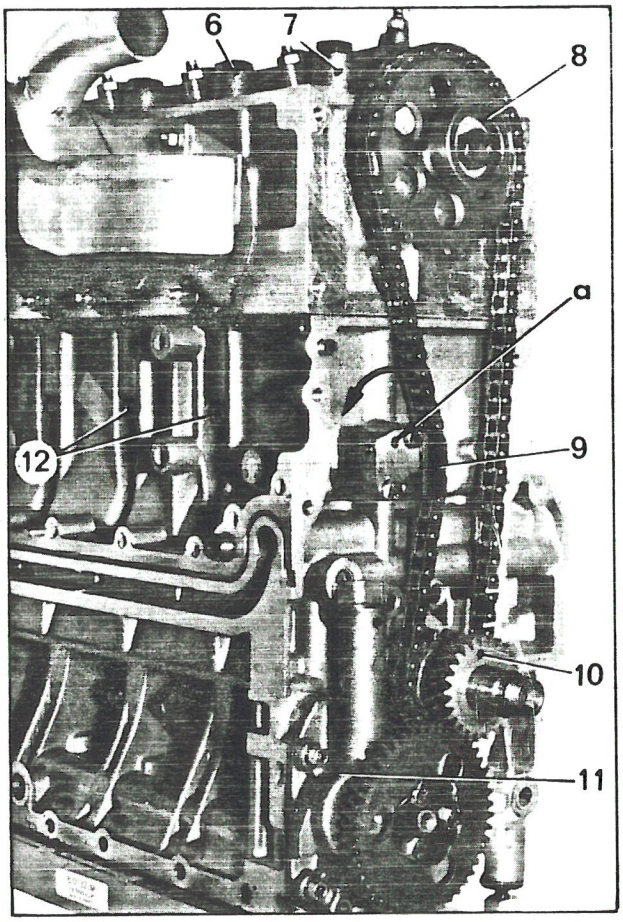

78-891

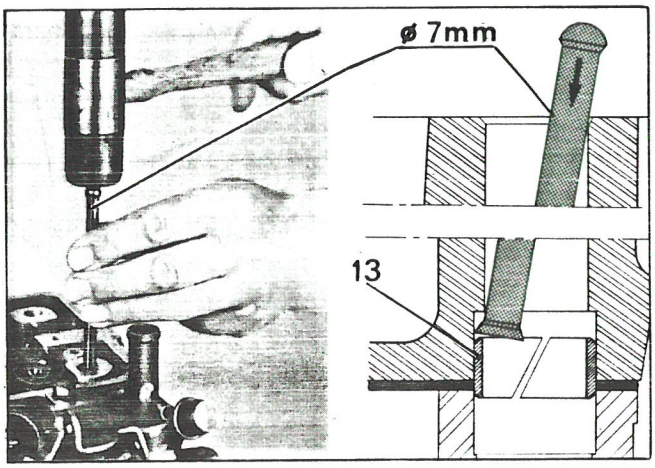

78-283

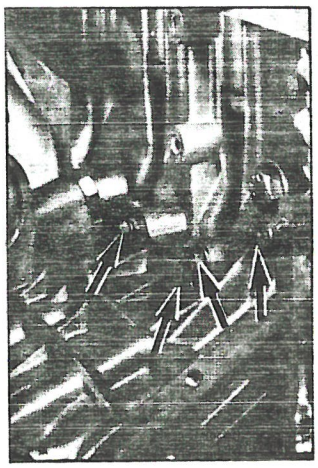

78-281



78-282

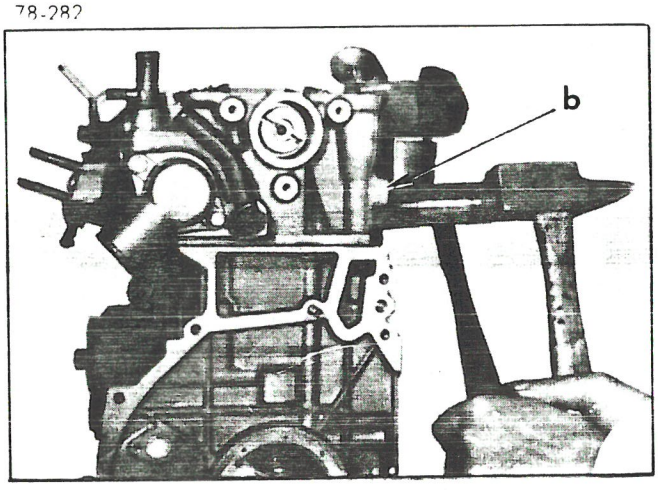

5. Put the engine and gearbox unit on support [M]

Attach plate [J1] and lock the crankshaft.

6. Loosen and remove nut (2).
Remove :
- the rocker cover (3),
- the seal (4) (use extractor [K1] fitted with bolt [K2] and grips [K3]

7. Remove :
- the rocker cover (1),
- the timing cover (5), and catch the fuel pump push-rod.

8. Remove the bolts and nuts (→).
Remove the gearbox and support it using the cross-member support [8.0313-T. P .]

9. Remove :
- pinion (10) and its key,
- the oil pump (11) and the intermediate plate,
- the fuel pump control eccentric (8),
- the chain tensioner (9) and filter.

NOTE : Set and lock the tensioner before removing it : using a screwdriver fitted into « a », turn in the direction of the arrow to abutt the shoe against the casing.

10. Remove :
- the timing chain with its pinions,
- the pinion key on the crankshaft.

11. To remove the cylinder head :
Remove :
- the bolts (6) and the nuts (12),
- the rocker arm and shaft assembly (7).

Drift the centering ring (13) to the end of its housing *(use an old rocker push-rod).*

Release the cylinder head by pivoting it, do not strike it directly, use a nylon mallet. The cylinder head should not be struck outside zone « b ».

11. Lock the liners.
Use clamps A1 , bolts A2 and four cylinder-head nuts.

12. To remove the moving parts :

Mark and set out on a tray all components which are reusable as they are removed : pairing, assembly direction, the relative position of all moving part components including liners, should be respected on reassembly.

a) Set the engine on the support clamp bolts.
b) Remove the bearing cap casing (2).
c) Remove the connecting rod caps (3).
d) Remove the seal (4).

NOTE : If the seal only is to be removed, without dismantling the bearing cap casing, use bit J2 and extractor bolts J3

e) Remove the crankshaft.

f) Remove the bearing half-bearings (6), from the block and from the bearing cap casing

g) Remove the side play adjusting half-shims (5).

h) Remove the liner-piston-connecting-rod assemblies (7), if the liners are stuck, use a wooden drift to release them.

13. Drift out gudgeon pins, using drift D3 and thrust washer D2 , drift out the gudgeon pin with a press.

Removal of the gudgeon pins means that the liner-piston assemblies must be renewed since the pistons are made unserviceable by removal of the pins.

ASSEMBLY

14. Basic requirements :

- **Use parts which are clean and free of defects.**
- Respect pairing and the assembly direction of new assemblies or parts marked on disassembly.
- Systematically renew seals, lock washers and the crankshaft pulley locking tap.
- Clean seal surfaces with a rag soaked in a remover product; **never use abrasive or cutting tool.**
- Oil all friction surfaces with engine oil as they are reassembled.

15. Fit the connecting-rods to the pistons *(new) :*

a) Fit a pin (8) to drift D3 and tighten the cone by hand without forcing. Oil the assembly.

b) Position the piston on base D1 , with the countersink of the pin hole against flange « b » of the thrust washer D2

c) Leave a gap of approximately 1 mm between the connecting rod caps.

78-292

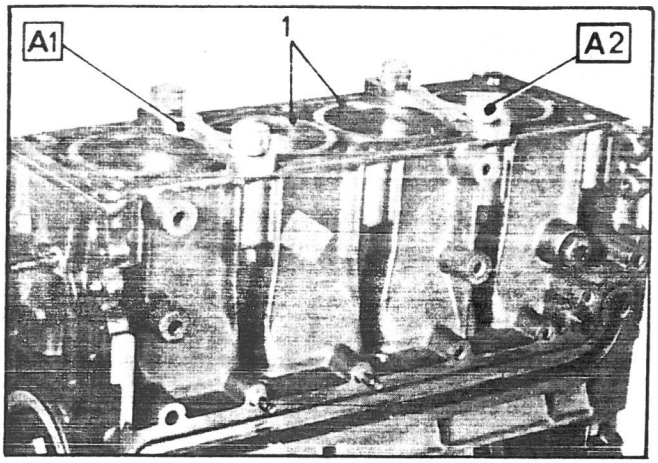

78-294

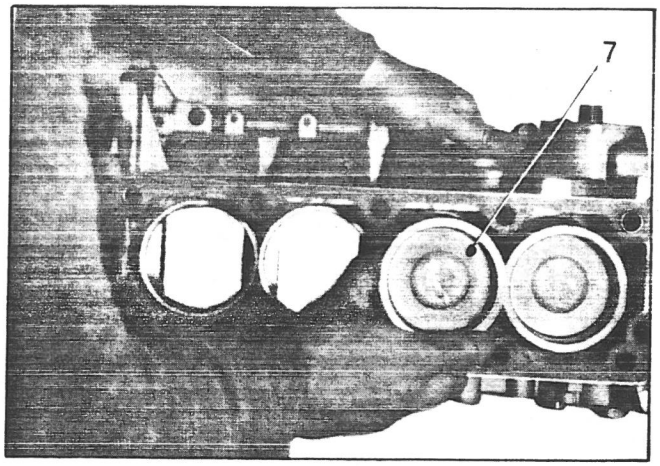

78-293

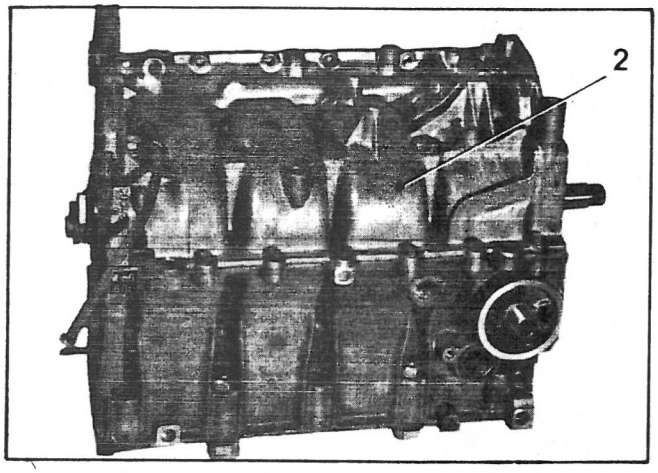

78-883

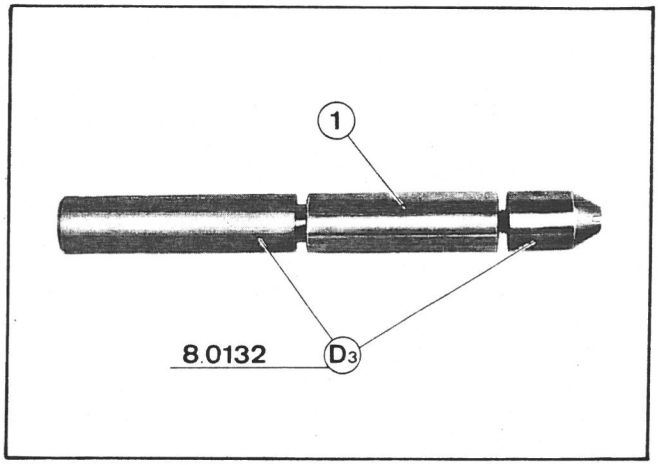

78-296

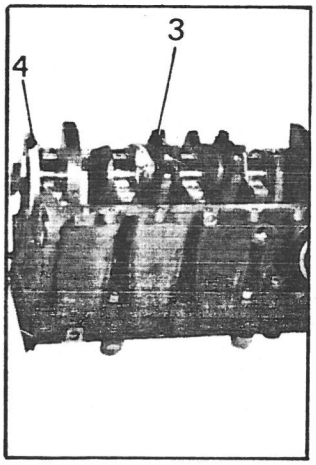

78-1165

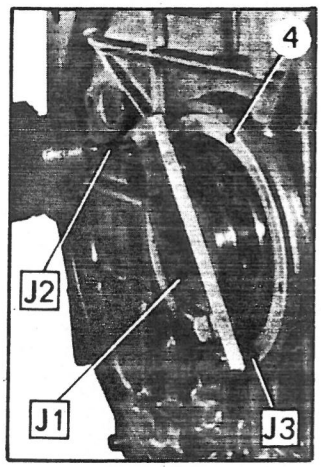

78-885

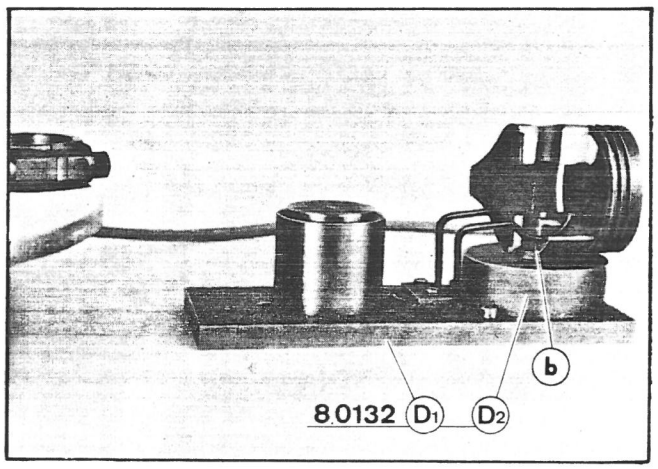

78-295

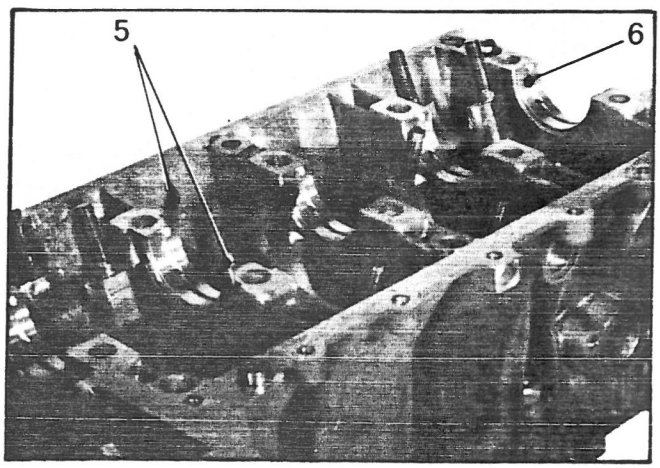

78-881

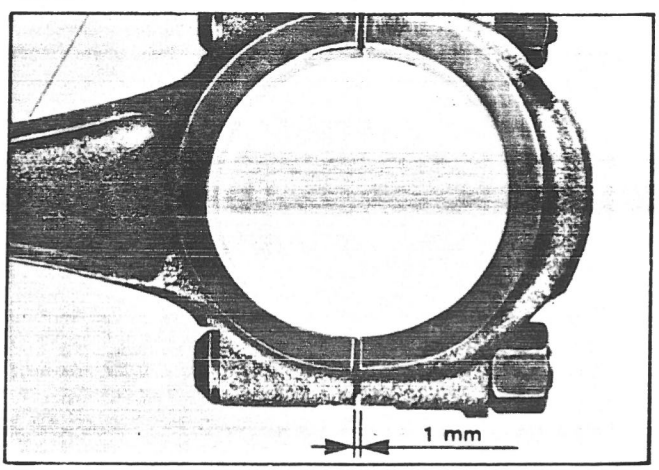

78-884

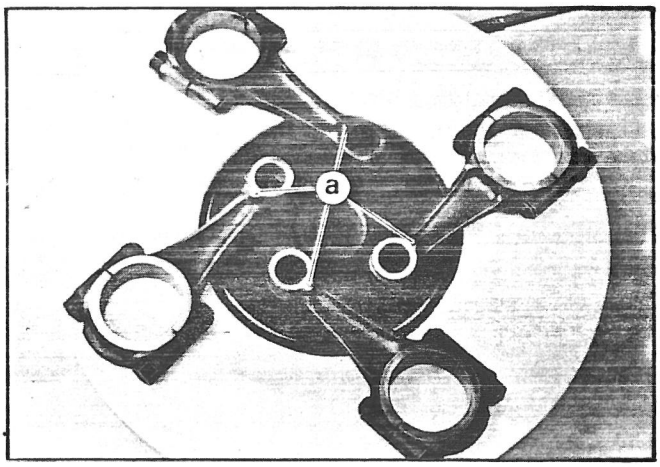

78-888

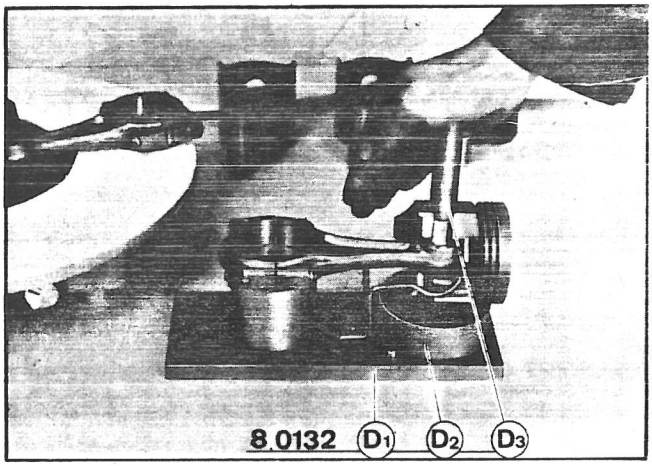

78-886

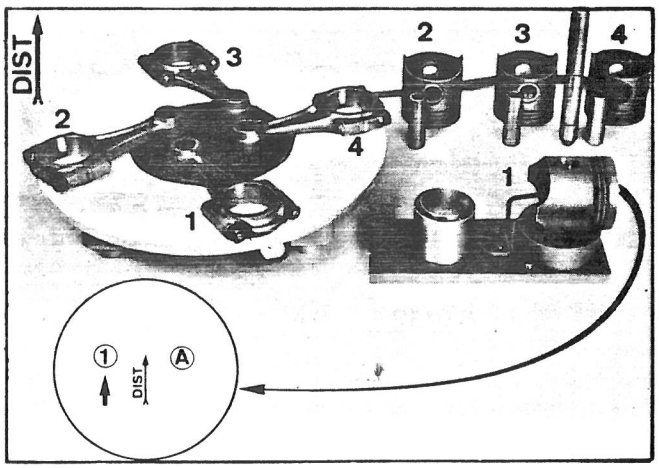

78-889

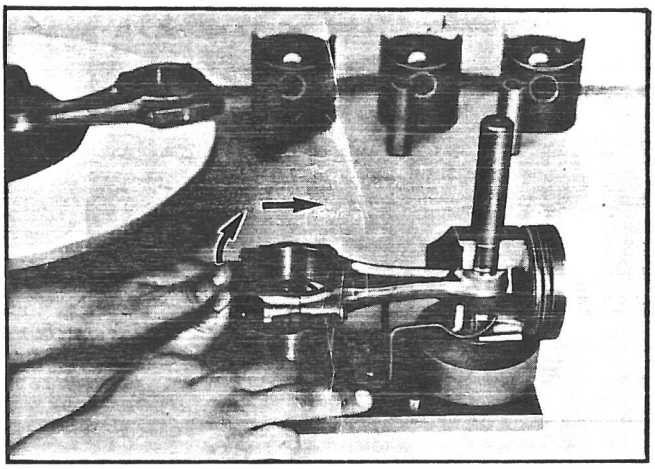

78-887

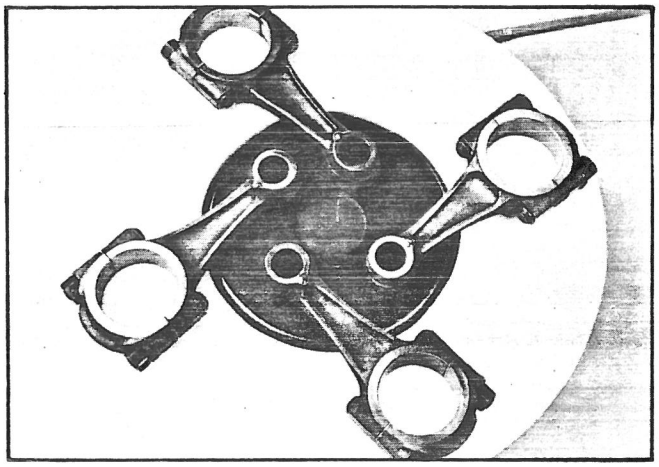

78-1174

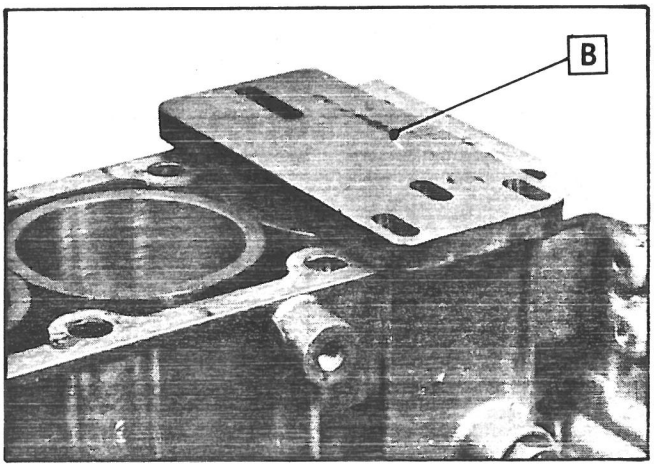

78-883 bis

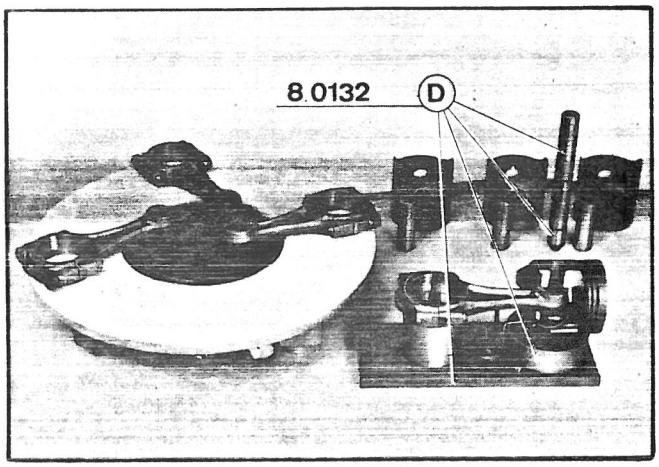

78-1178

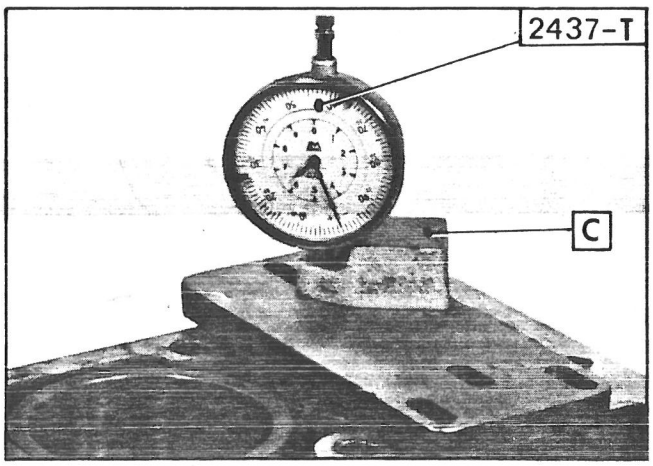

d) Put the connecting rods onto a hot plate so that the small ends are in contact with it, and insulate the big ends on a refractory plate or by some other method and at point « a » put a drop of tin solder.

There is no special side for fitting the connecting rods in relation to the pistons, as long as *new* connecting rod half-bearings are fitted; if not, comply with the marks made on removal.

Piston-pin pairing	
Mark on piston	**Corresponding reference on pin**
1	Blue
2	White
3	Red

e) Turn on the heating plate and turn off when the solder fusion point is reached.

The success of the following operations depends on the speed at which they are carried out.

f) Clean off the drop of solder from the first connecting rod and fit it to the assembly.

g) Quickly engage the gudgeon pin by hand until cone D3 abuts against base D1.

Wait for ten seconds at least.

h) Lift up the big end of the connecting rod and eject the assembly.
Remove drift D3 and proceed in the same way for the other connecting rods.

16. Liner level adjustment :

The protrusion of the liners beyond the joint face of the cylinder block should be between 0.11 and 0.18 mm, and if possible nearer to 0.18 mm.
The protrusion difference between two consecutive liners should not exceed 0.04 mm.

There are 4 gasket thicknesses identifiable by a color reference.

Color	Thickness
Blue	0.070 to 0.105 mm
White	0.085 to 0.120 mm
Red	0.105 to 0.140 mm
Yellow	0.130 to 0.165 mm

a) Put the liners without their gaskets into the block and put the plate B into position with the flat side upwards, and ensure that it does not rest on the block.

b) Fit dial gauge 2437-T to support C.

c) Calibrate the dial gauge with the pointer on the liner, and compare this calibration at four points. **The difference should not exceed 0.02 mm,** if not eliminate the cause.
- foreign body,
- tooling damaged,
- liner distorted.

d) Across the three holes « a » in plate [B], mesure **the protrusion or shrinkage** of each liner in relation to the block joint face *(with pointer touching the block)* the difference between the three measurements **should not exceed 0.05 mm.** If not, eliminate the cause.
- foreign body between the liner and the block,
- tooling damaged,
- cylinder block distorted.

e) Determine the theoretical thickness of the gasket to be fitted.
- **If the liner is higher, subtract the largest measurement from 0.18 mm.**
- **If the liner is lower, add 0.18 to the largest measurement.**

f) **Select gasket,** *or in exceptional cases, two gaskets*, one on top of the other, the thickness of which is equal to or immediately below the thickness found.

g) Fit the gaskets onto each liner with the color mark upwards and locate the liners in the cylinder block **so that the colors are visible, without being covered by the next lining.**

h) Check that the liner protrusions are between **0.11 mm and 0.18 mm, and as near to 0.18 mm as possible.**
Also check that the protrusion between **two consecutive liners** *points « b » and « c »* **does not exceed 0.04 mm,** if not **fit a gasket of a thickness immediately below** on the one or two liners the protrusion of which is maximum.

i) Use a felt tip pen to mark at point « d » the order and position of the liners **on the oil duct side (1)** and then remove them.

17. Fit the rings to the pistons :
The manufacturer's mark or the mark « TOP » should face upwards on the piston.
The expander gap in the scraper ring should be orientated in the same direction as the gudgeon pin at « e », and the ring gaps at « f » should be offset on either side by approximately 20 to 50 mm.

The other two segments **are orientated at 120°** from the expanding gap.

LINER-PISTON PAIRING

Mark on piston	Corresponding mark on liner
A	1 file mark
B	2 file marks
C	3 file marks

On the same engine, all four assemblies should be of the same type, **A, B or C.**

18. Fit the pistons into the liners :

a) Fit the connecting rod big end in a vice (**vice clamps**).

b) Use a ring clip to tighten the rings.

c) Offer up the liner with the DIST arrow in relation to the oil channel side mark « d » *(felt pen)* **see photo.**

d) **Push the liner onto the piston without rotating it,** and proceed in the same way for the other pistons.

e) Arrange the gasket color tabs opposite the oil duct side.

19. Fit the assemblies into the cylinder block and respect the order and alignment of references « d » **and ensure that the DIST arrow on the top of the pistons is facing the timing end.**

20. Lock the liners with clamps [A]

21. To fit the crankshaft :
a) Put into place the connecting rod half-bearings (4) and the five bearings splined half-bearings.

b) Fit the crankshaft and the side stop half-shims (2) **with the grooved side facing the crankshaft.**

c) Fit the connecting rod caps (3) fitted with their half-bearings, *do not tighten the caps.*

78-1176

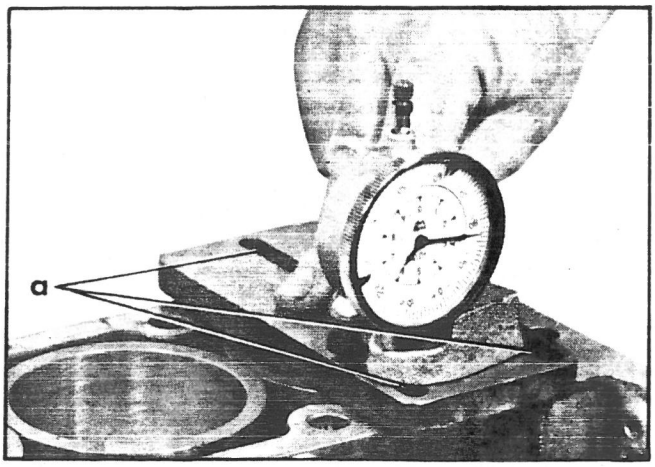

78-1175

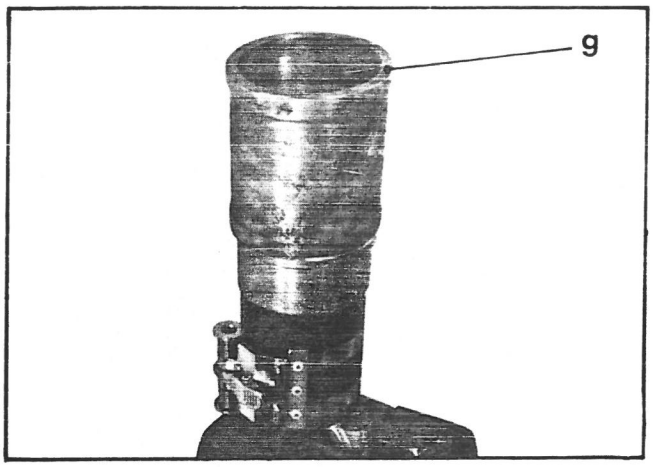

78-1174

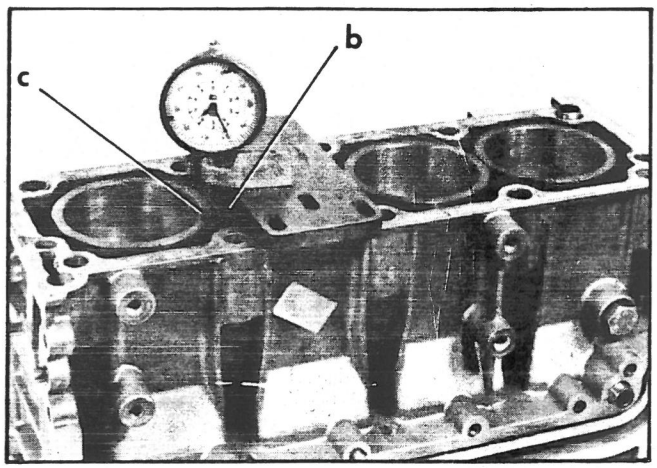

78-1172

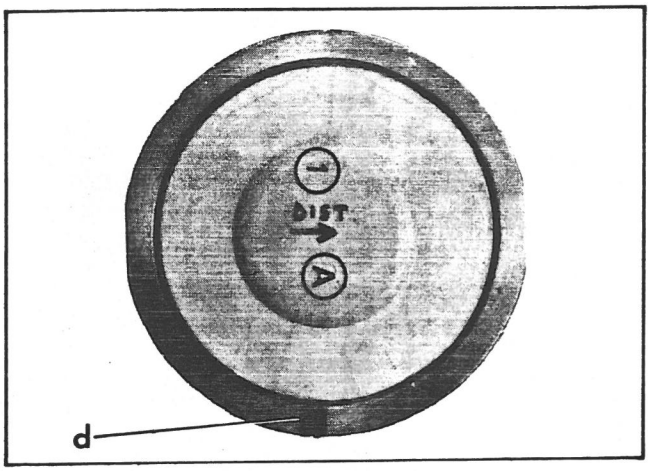

78-1179

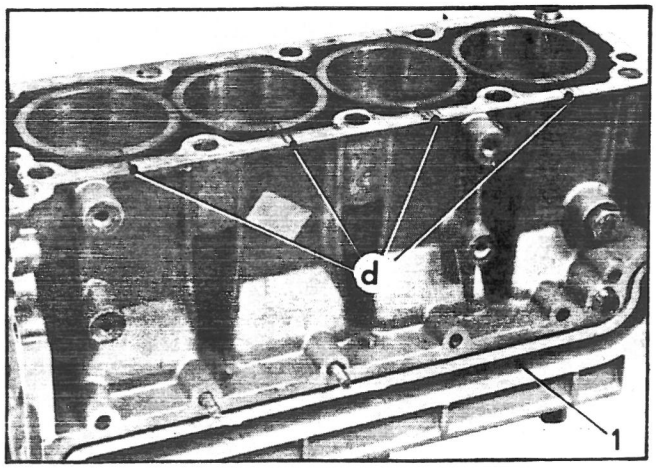

78-1158

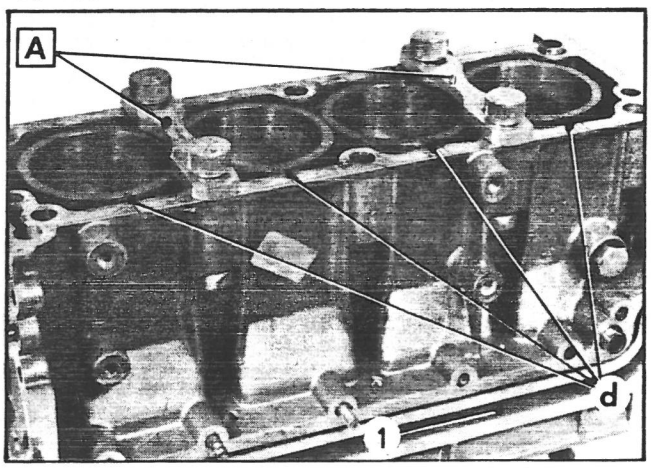

78-1173

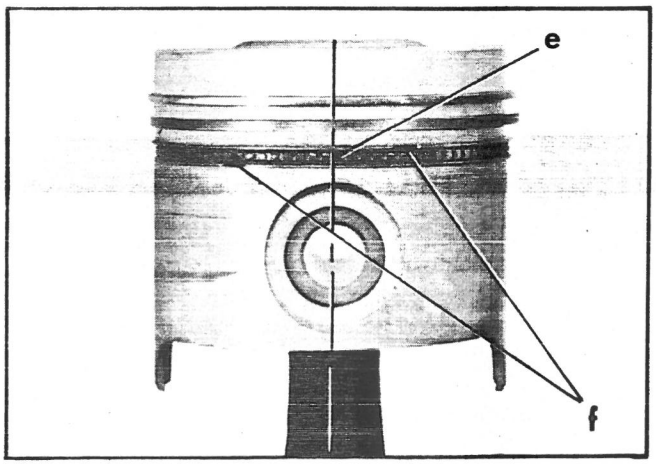

78-1181

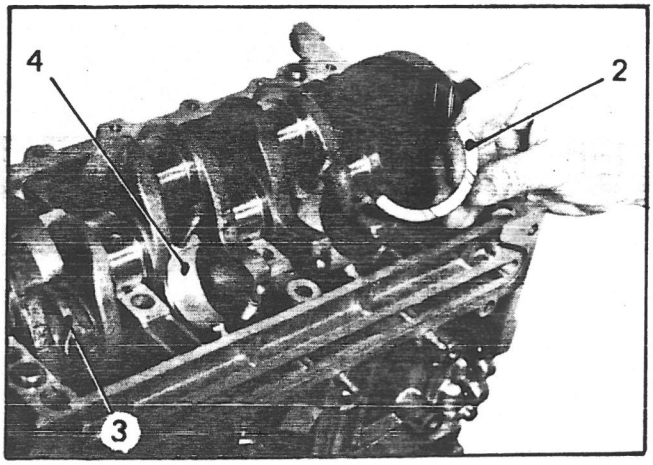

78-1180

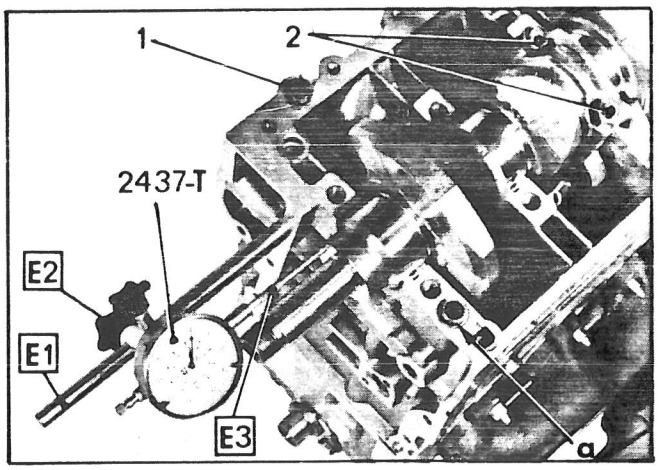

78-1170

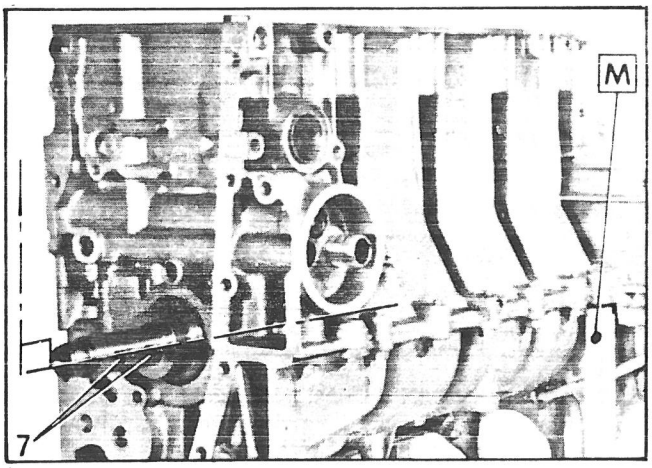

78-1157

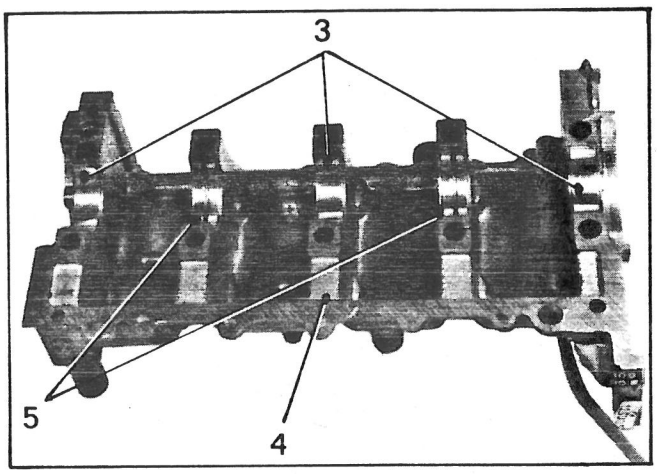

78-1169

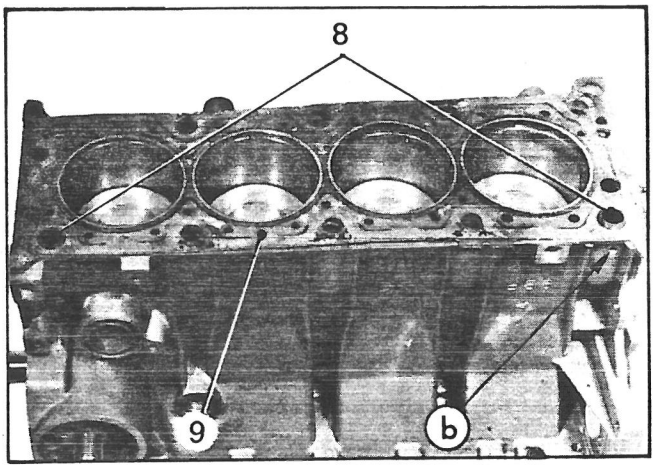

78-1171

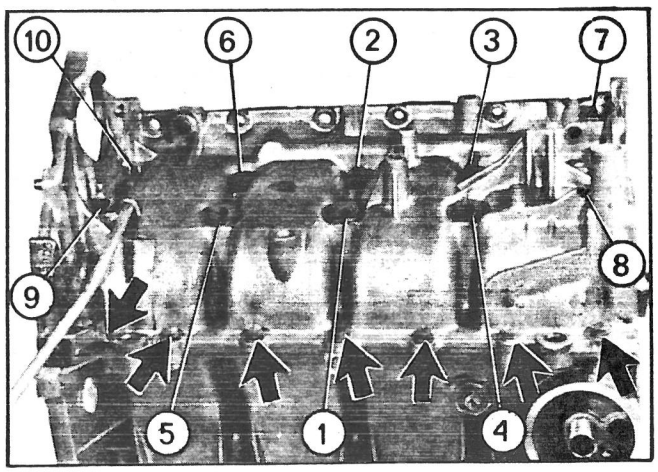

78-1168

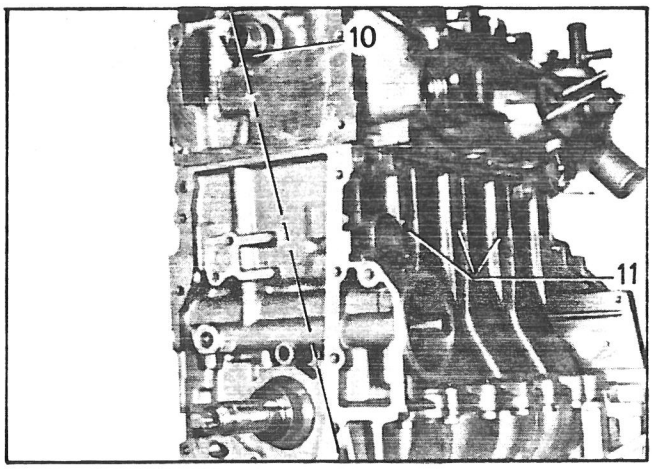

78-1167

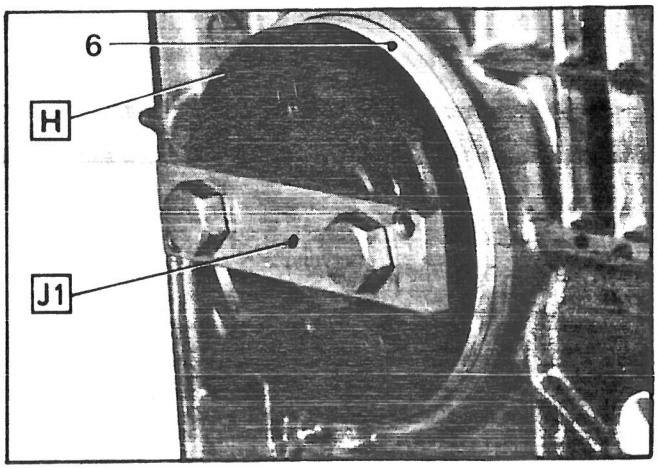

78-1161

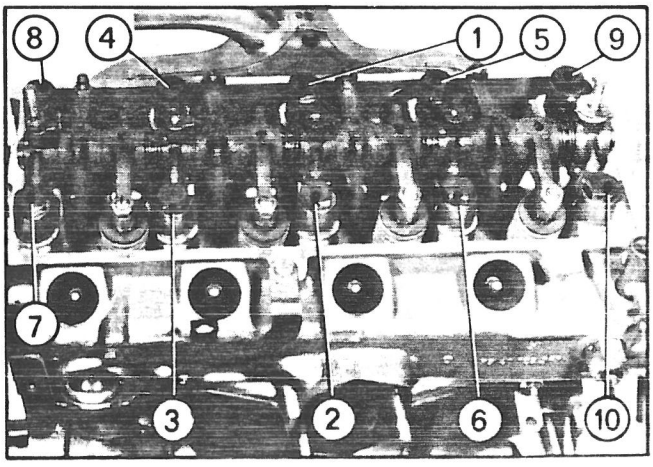

22. To set the crankshaft side clearance :
Take two half-rims of identical thickness to obtain side clearance of between **0.07 and 0.27 mm.**
Use the dial gauge support assembly [E1] [E2] [E3] and dial gauge [2437-T]

23. Tighten the connecting rod cap nuts (2) to a torque of **3.5 to 4 m.daN.**

24. Fit an O-ring seal *(new)* at « a » and check that the two centering rings are fitted (1).
Smear the joint face with a sealing compound.

25. Fit the crankcase head (4), with the 2 grooved half-bearings on the intermediate bearings (5) and the three smooth half-bearings (3) on the other bearings.

26. Fit the crankcase head (4) **preventing the half-bearings from falling out.**

27. Fit the bolts *(flat washer under head).*
- Bolts (9) and (10) length 105 mm
- Bolt (7) length 140 mm.

Tighten the bolts in the numerical order shown on photograph 78-1171.

Pre-tightening : 3.5 to 4 m.daN

Final tightening : 5 to 5.5 m.daN

Fit and tighten bolts (→) to **1.5 m.daN.**

28. To fit seal (6) :
- **Fit a new pre-tallowed seal (6) onto ring [H]**
- Offer up ring [H] and press home using plate [J1] by tightening home the bolts.
- Remove ring [H] and refit plate [J1] which enables the crankshaft to be turned or locked.

29. Place the block on support [M]

30. To fit the cylinder head :

NOTE : In case of prior reconditioning of the cylinder head, use universal compressor for removal of valves.
No rectification of the joint face is permitted.
Maximum out of flat permitted if **0.05 mm.**
It is possible to renew the valve guides and seats. The guides and seats obtained from the Replacement Parts Department should be **of repair size** and are fitted by immersion of the cylinder head in boiling water.
Repair valve guides :
1st choice : 13.24 mm diameter
2nd choice : 13.54 mm diameter.
The intake guides are fitted with seals.

Repair intake seats	Seat diameter in mm	Diameter in cylinder head in mm
1st choice	38.43	38.30
2nd choice	38.63	38.50

Repair exhaust seats	Seat diameter in mm	Diameter in cylinder head in mm
1st choice	31.31	31.30
2nd choice	31.51	31.50

a) Point the pin housings (7) perpendicular to the cylinders on the oil filter support side (see photo).
b) Check that the two centering pins (8) are in position and that they protrude by **approximately 7 mm.**
c) Fit a new seal (9) dry and place the cylinder head into the engine block without pushing home the centering pins (8), *(to prevent the retractable pin from being pushed home, insert a 4 mm diameter peg at « b » during installation of the cylinder head).*
d) Point the key (10) housing of the camshaft as per the photo.
e) Fit the rocker arm and shaft assembly *(centering pins),* the cylinder head bolts *(faces and threads oiled)* and their nuts (11).
Check that the bolts are marked 10-9 on the head, if not obtain them from the Replacement Parts Department.

f) To tighten the cylinder head, the numerical tightening sequence shown on photograph 78-1161 and the torques indicated should be complied with.
1st tightening : 4 m.daN
Final tightening : 6.5 to 7 m.daN

31. To set the timing :

a) Fit the chain onto the pinions respecting the alignment of :
- the two links marked in white with mark « a » of the camshaft pinion,
- the link marked in white with « b » on the crankshaft pinions.

NOTE : If the mark disappears, determine links « c » and link « d » as per the photo.

b) Check that the keying is facing the right way (see para. (a) and (b) and fit the pins.

c) Fit the pinion-chain assembly and line up the marks.
The marks should be visible from the outside.

d) Fit the chain tensioner filter and the tensioner, with slide block (2) locked in the maximum retracted position.
Bolt (3) tightening **0.6 m.daN** *(spring washers)*

e) **Turn the set bolt (4) clockwise to abutment to release the slide block (2).**

f) Fit the oil pump and **its intermediate panel** *(use peg* 8.0133-T.A *and fit into orifice (1) in order to center the oil pump when tightening the bolts).*
Bolt (9) tightening **0.6 m.daN** *(spring washers).*
Check that the oil pump rotates freely, and alter its position around the centering pin if necessary.

g) Fit :
- the key (8),
- the pinion (7) *(shoulder to the outside of the engine),*
- the eccentric (5) with its slot properly engaged in the key, tighten bolt (6) to : **7 to 8 m.daN.**

32. Fit the gearbox :

Cleaning the lower casing :
Remove :
- the protective plate,
- the bottom sump (12) and the drain plug,
- the oil strainer (10).

Clean and blow out the components and the oil suction pipe.
Fit :
- the oil strainer (10), bolt tightening : **1 m.daN.**
- the lower sump (12) fitted with a *new* seal (11), bolt tightening : **1 m.daN**
- the drain plug *(new seal)*.
  tightening torque : **2.5 to 3 m.daN**
- the protective plate.

a) Check that the centering pins (15) and the studs (13) are fitted.

b) Fit a *new* O-ring seal at « e » on the gearbox.

c) Smear the engine joint surface with a sealing compound including around the oil duct (14).

d) Fit the gearbox taking care not to push in the pins (15).

e) Fit the mounting bolts and nuts *(spring washers).*
Tightening torque : **1.25 to 1.5 m.daN**

78-1163

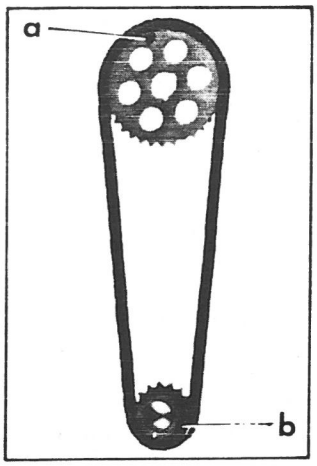

78-1164

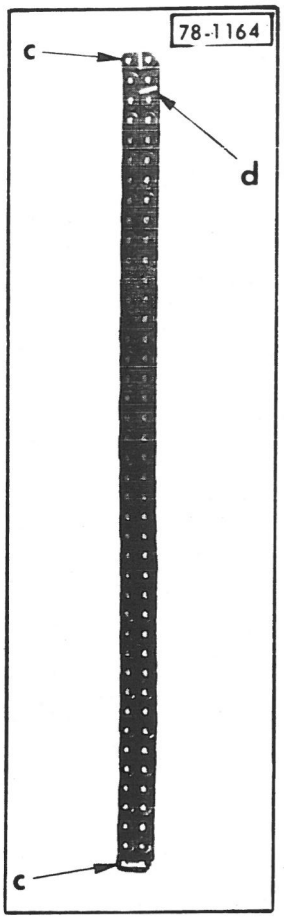

78-1089

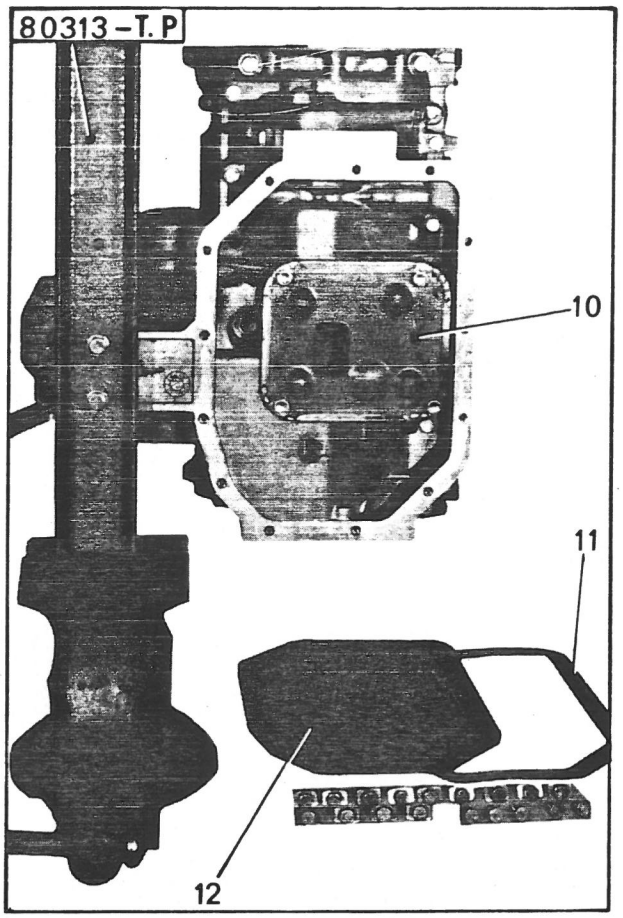

78-1159

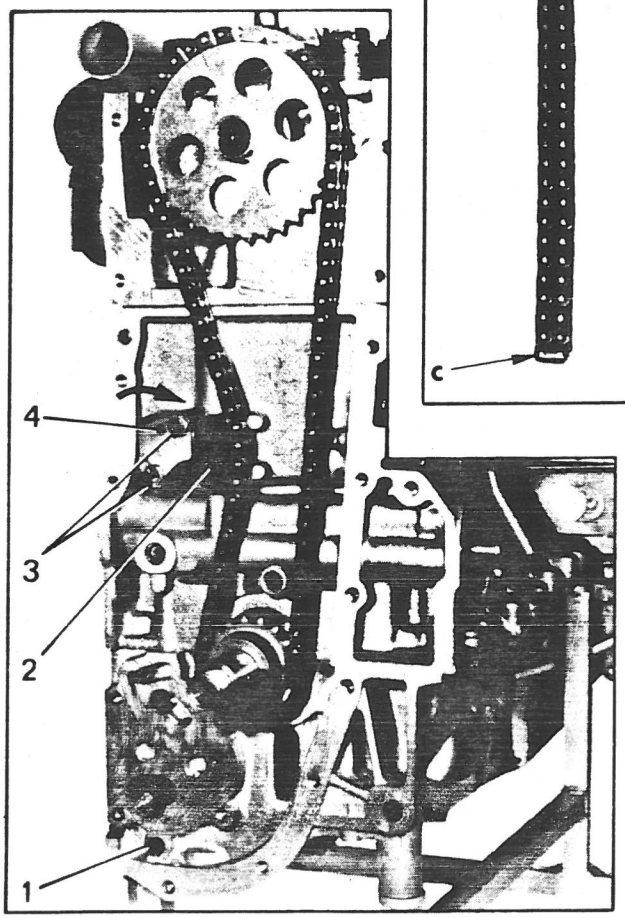

78-1130

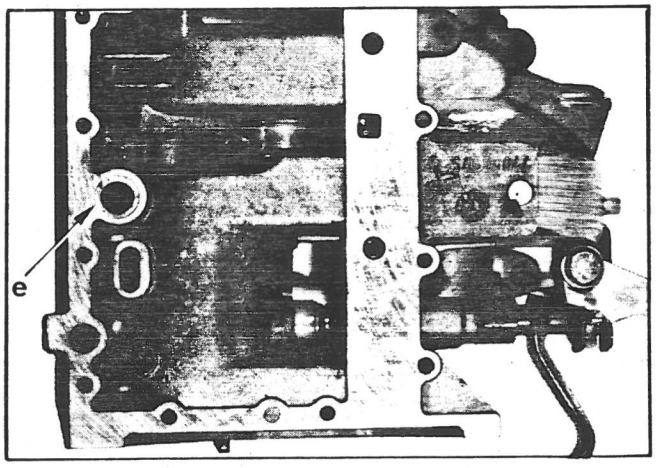

78-1160

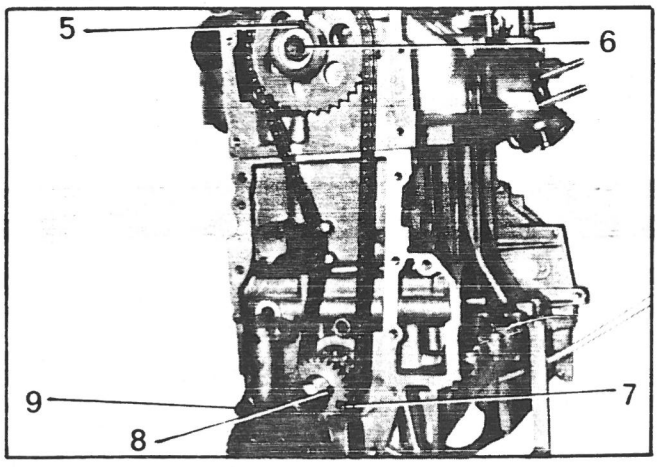

78-292

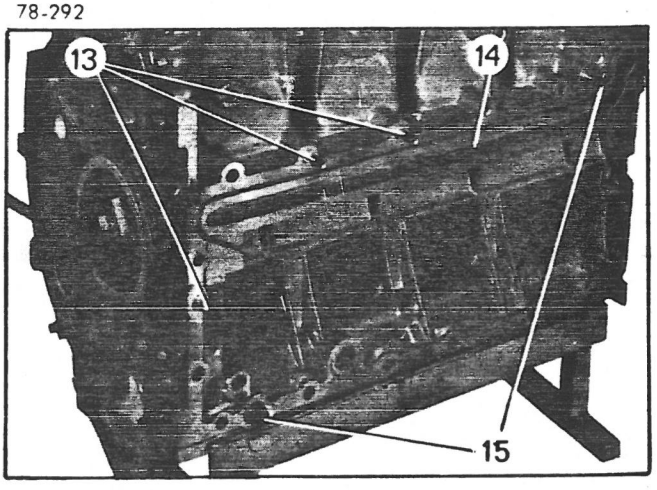

78-266

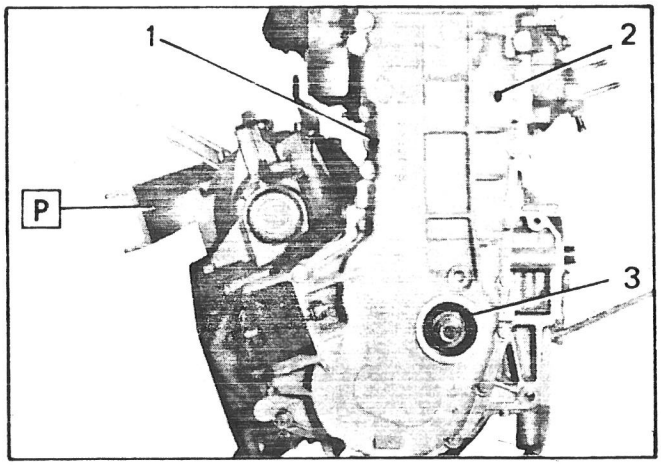

78-271

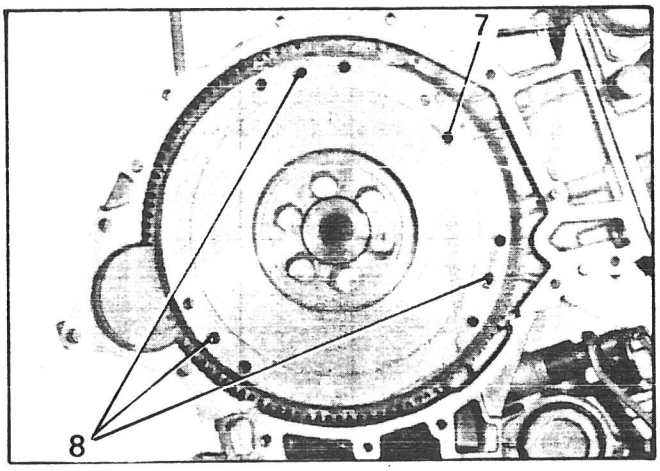

78-270

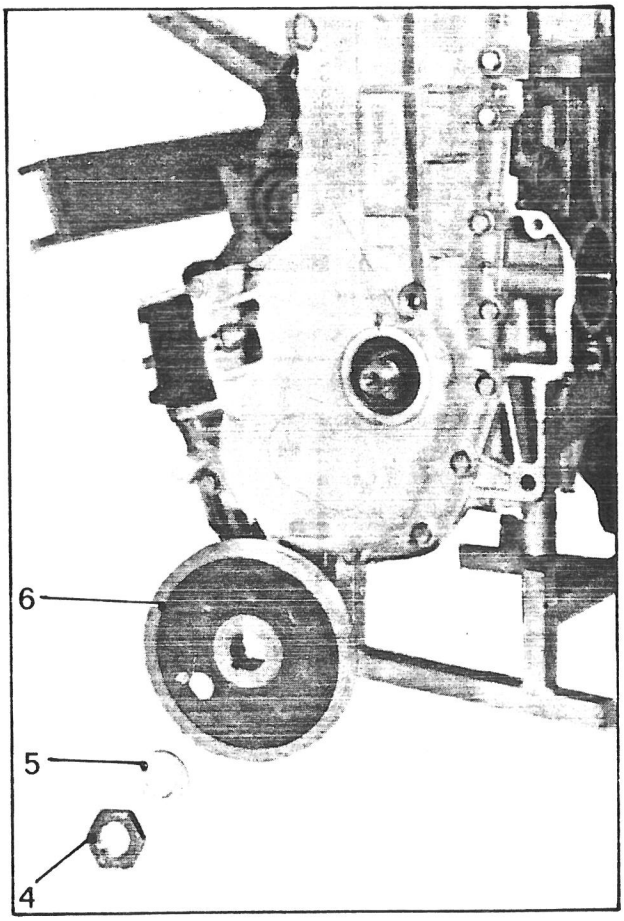

78-272

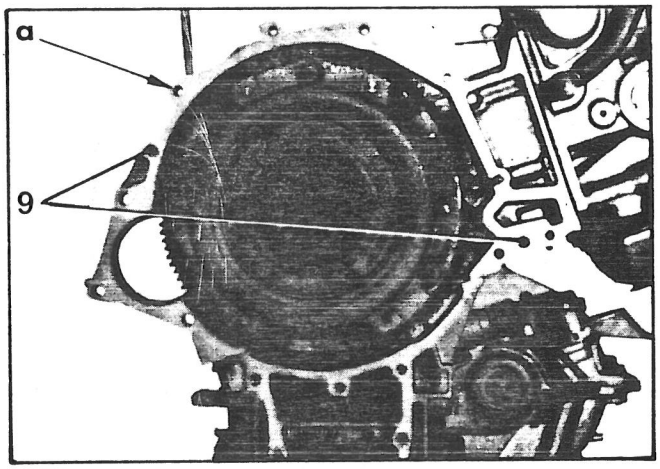

78-1183

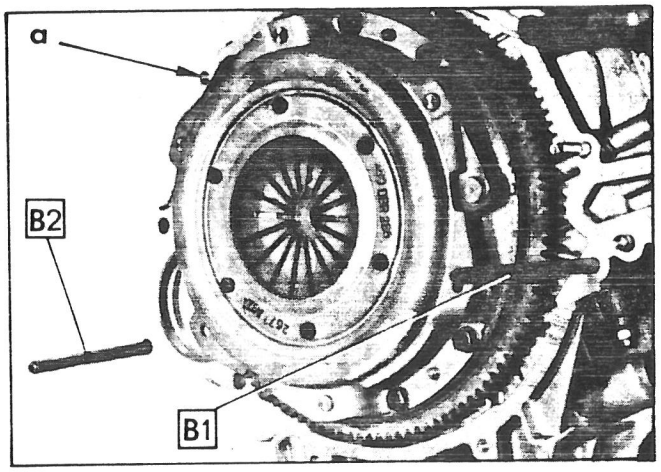

78-1166

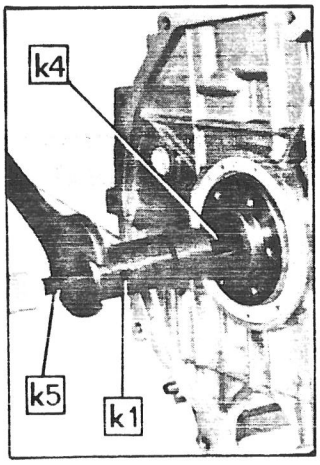

78-1162

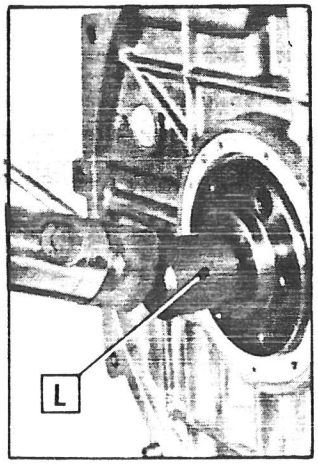

78-1184

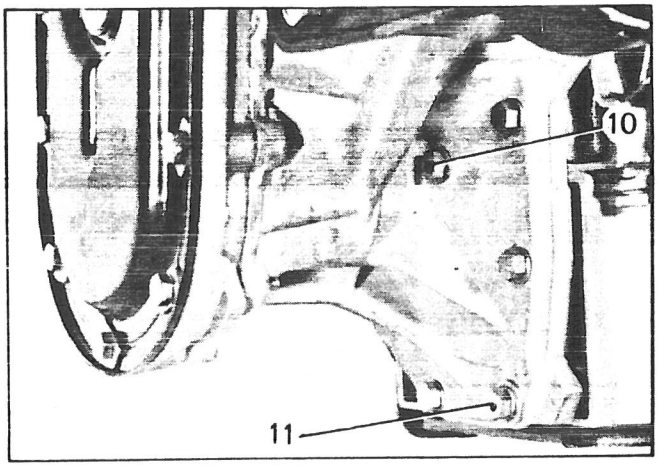

33. Center and fit the timing casing :

a) Check that the centering pin (1) is fitted and fit casing with a *new* dry seal.

b) Center the casing using centering ring [F] **with seal (3) removed.**

c) Fit and tighten the assembly bolts.
Tightening torque : 1 to 1.5 m.daN

d) Tallow and fit a *new* seal (3) with mandrel [G]

34. Fit :
- the pulley (6) and engage it in the key,
- a tab lock (5) *(new),*
- the nut (4).

Lock the crankshaft and tighten the nut (4) to a torque of **13 to 15 m.daN.**
Lock the nut (4).

35. *If necessary,* **renew the engine pinion centering ring :**

a) Simultaneously extract the centering ring and its seal, using extractor [K1] fitted with bolt [K5] and grips [K4]

b) Fit a *new* ring, **with a chamfer to the outside,** and gently tap home with a mallet (mandrel [L])

NOTE : Since the centering ring is self-lubricating, it should never be de-greased, if necessary leave to soak in engine oil before assembly.

c) Fit a seal, with the thin lip inward. Gently tuck the mandrel [L] until it comes up against the self-lubricating ring, but do not push home into its housing.

36. Fit the engine flywheel (7) :
- Line up the flywheel holes with the crankshaft tappings.
- Coat the bolts with LOCTITE FRENETANCH and fit.

Tightening torque : 6.5 to 7 m.daN

37. Fit the clutch :

- Check that the three centering studs (8) are fitted
- Center the plate with centering tool [8.0209-T.A]
- Fit the mechanism and tighten the bolt to **1 m.daN** *(spring washers).*

38. Fix the clutch housing and transfer gear assembly :

- Check that the centering pins are fitted (9).
- Position guides [B1] and [B2]
- Dry fit a *new* seal.
- Fit the clutch casing and transfer gearbox assembly by slightly turning the gearbox input shaft and the engine flywheel in order to facilitate engagement of the splines.
- Screw up bolt (11) without tightening and the extended head screw used as an earth terminal at « a ».
- Remove guides [B1] and [B2]
- Attach the hoisting lug and the clutch cable sheath stop.
- **Fit** all assembly bolts **but do not tighten.**
- Tighten bolt (10) and then all of the others including the extended head screw to a tightening torque of **0.75 to 1.25 m.daN**

39. Fit :

- the carburettor spacer (2), with the flat downwards and the air filter carburettor assembly *(tighten moderately),*
- the push rod (1) and the fuel pump (6),
- the water pump (5), fit a *new* O-ring seal (4), tighten bolts to **1.75 m.daN,**
- the filter cartridge (11) with spanner 8.1403-T
- the alternator (8) and its tension plate (7), tension the belt and tighten the alternator attachment bolt (9) to **4.5 m.daN**, with the tension plate bolts to **1.75 m.daN,**
- starter, and in order, tighten the bolts (12) and the rear support nuts.
  Tightening torque : **1.5 to 1.75 m.daN**
- the flexible mounting (13),
  Tightening torque : **1.5 to 1.75 m.daN**
- the water temperature switch on the cylinder head and the oil pressure switch (3),
  Tightening torque : **4 to 5 m.daN**
- the oil gauge,

40. Set the rockers :

- Turn the engine clockwise by means of the pulley nut (10).
  Intake clearance : 0.10 mm
  Exhaust clearance : 0.25 mm

  See Op. VD2. 112-0

- Tighten the rocker adjusting lock nuts to : **1.5 to 2 m.daN.**

- Fit the rocker cover (14) *(new seal)* **and tighten moderately** *(fibre and flat washers).*

41. To set the distributor setting gratuated plate position, if necessary :

- If plate (16) has been removed or is not properly adjusted *(paint mark « b » damaged)*, the position should be reset.

- Remove plug (15) use adapter 8.0133-T.B with access through one of the orifices at « a » in the crankshaft pulley.
- Turn the engine using the crankshaft pulley nut in order to bring the flywheel mark « c » opposite the ZERO graduation on the adjusting rule.
- Insert special peg 8.0133-T.A **and no other.**
- **Gently turn** the crankshaft in one direction or another until the peg engages with the counterweight groove of the fourth crankpin.
- **In this position, pistons No. 2 and 3 are at top dead center.**
- Check that the **ZERO graduation is opposite the mark on the flywheel,** if not alter the position of the plate (16). Tighten bolt (17) and mark « b » with paint in order to show up any further out adjustment of the plate (16).
- Remove peg 8.0133-T.A and fit plug (15) *(new seal).*
  Tightening torque : **2.25 to 2.75 m.daN.**

42. Fit the distributor (18) :

- Line up the mark on the flywheel opposite graduation No. 5 on the plate and fit the distributor, **only one position is possible.**
- Set distributor *(see Op. VD2. 210-0)*
  Tighten the three bolts moderately.

43. Top up the oil with TOTAL GTS 15 W 40 all weather or GT 10 W 30 winter.

44. Tightening down the cylinder head :

After having fitted the engine in the vehicle, run until the electric-fan starts up and **then leave to cool for a minimum of two hours.**

Tighten down the cylinder head : proceed bolt by bolt, slacken the bolt and then tighten to : 6.5 to 7 m.daN complying with the tightening sequence.

Set the rockers *(see paragraph 40).*

78-234

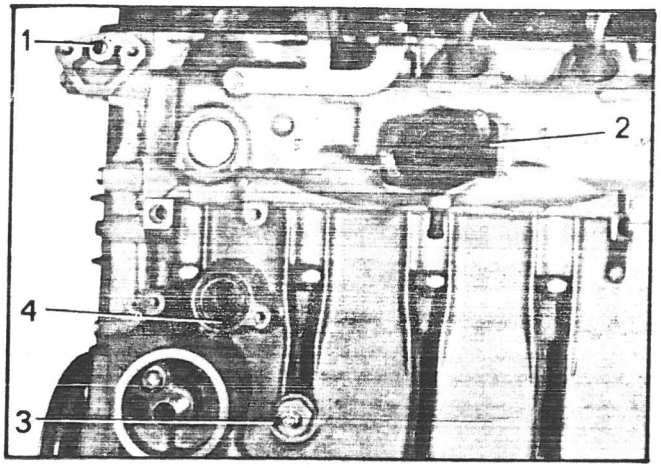

78-266

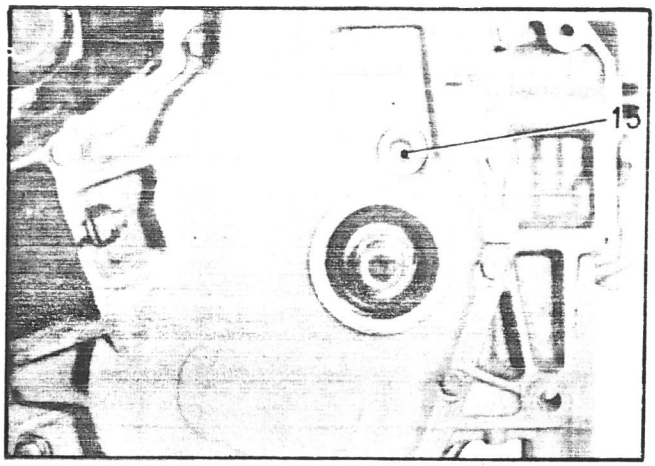

78-229

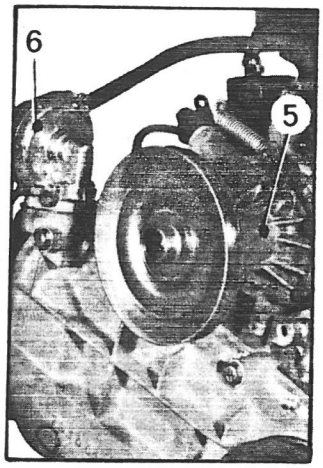

78-233

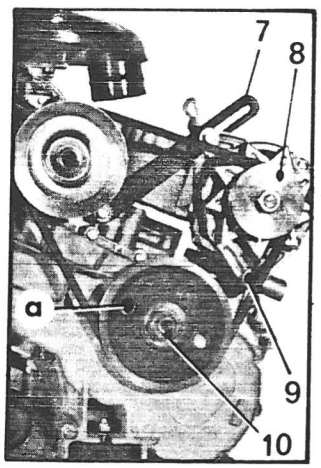

78-232

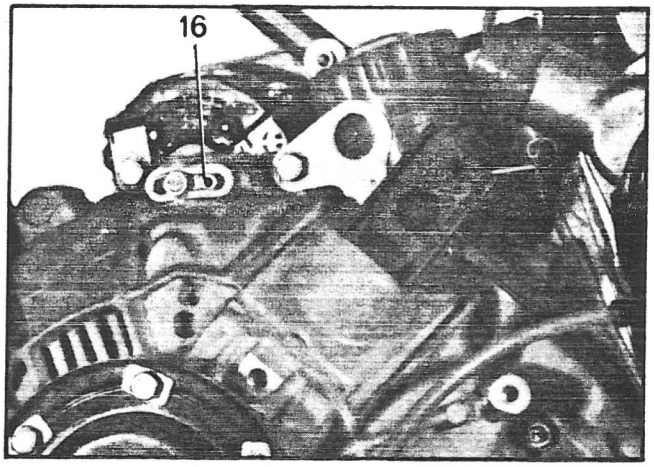

78-235

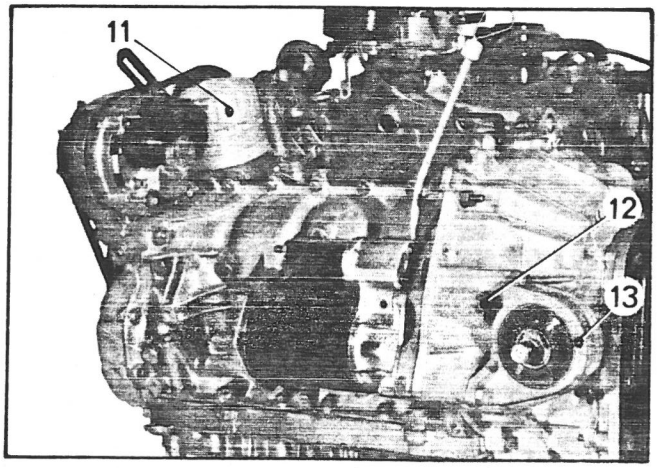

78-797

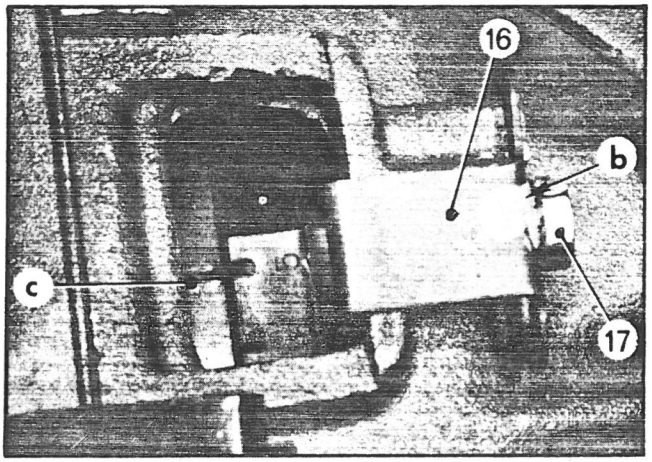

78-231

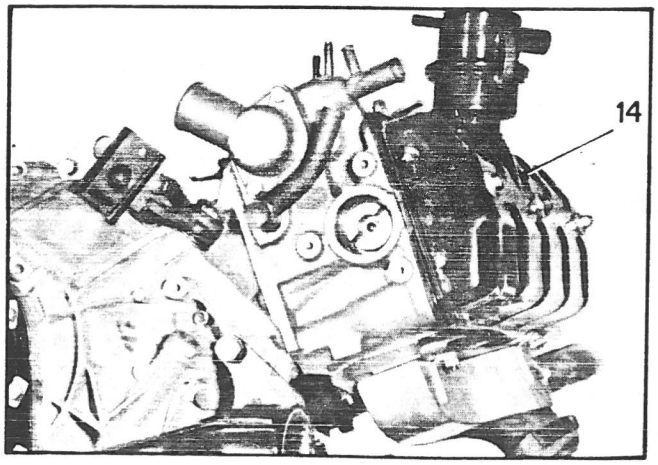

78-232

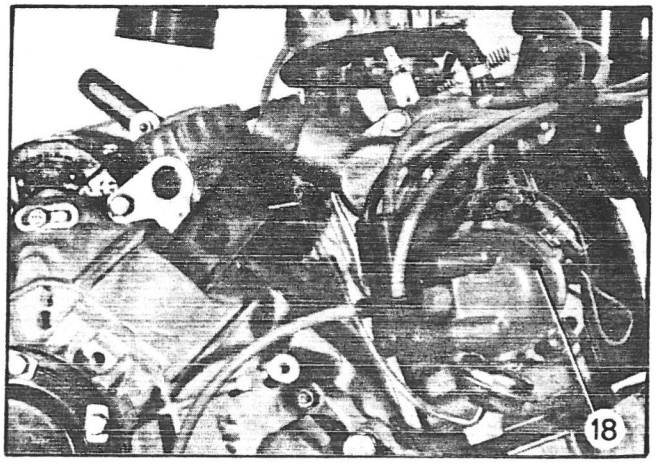

OPERATION
VD2. 315-3

WORKING ON A TRANSFER GEAR ASSEMBLY

SPECIAL TOOLING

TOOLS SOLD

From kit 8.0132-T use :
8. 0209-T. B : Set of two guides

From kit 8. 0313-T use :

A : Seal protector.

C : Bearing assembly tools :
G1 : Ring
G2 : Cone

F : Bush removal and fitting tool

H : Pinchers for speedometer control and bearing lock rings

B : Press plate comprising :

B1 : Plate

B2 : Washer

M : Shaft lock ring fitting drift

P : Gearbox or clutch housing support

E : Intermediate plate or clutch casing support

TIGHTENING TORQUES

Recommended tightening torques :

Tightening point	Torque in m.daN
Intermediate casing plate and cover mounting bolts	1.25 to 1.75
Clutch housing mounting bolts	0.75 to 1.25
Front left engine support mounting bolts	1.5 to 1.75
Starter support to cylinder-block mounting bolts	0.75 to 1.25

78-365

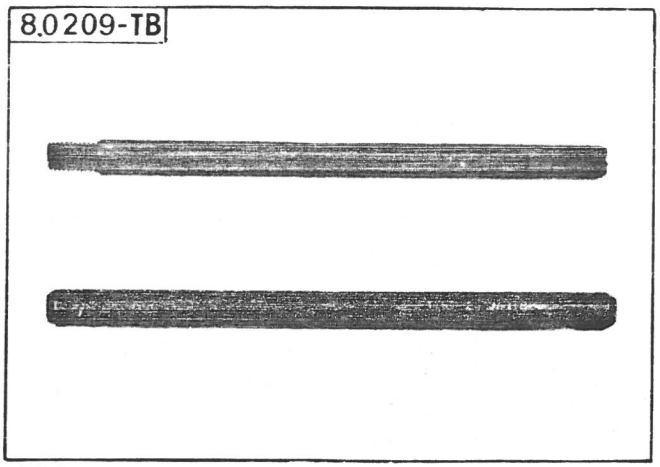

78-363

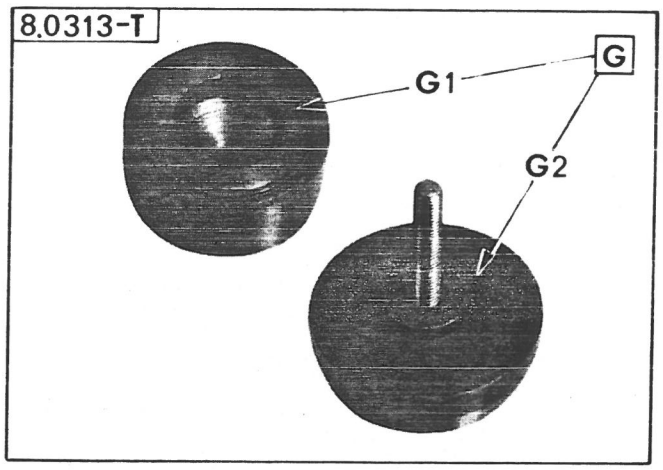

78-358

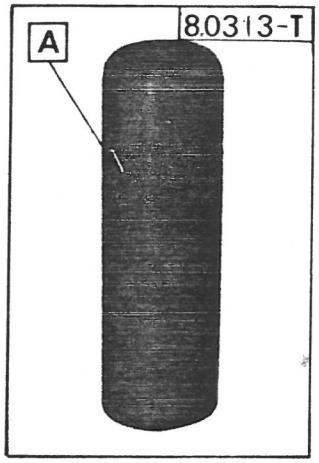

78-355

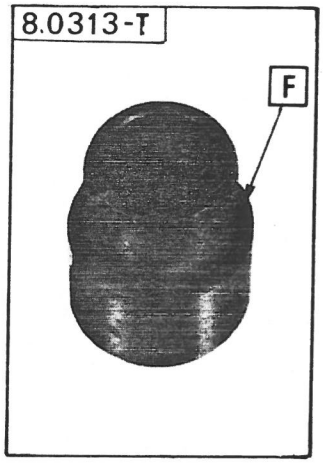

78-361

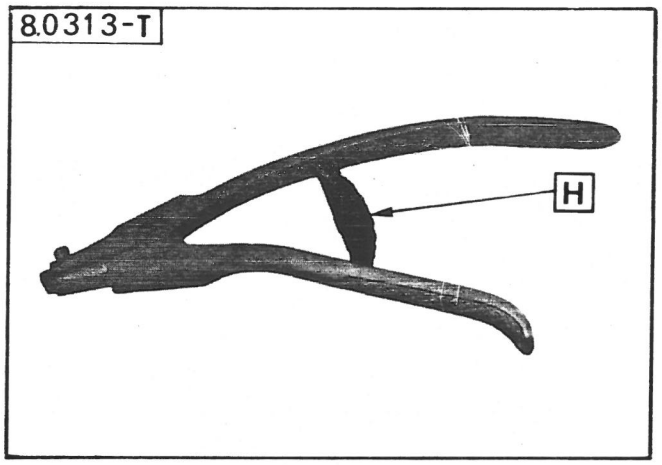

78-369

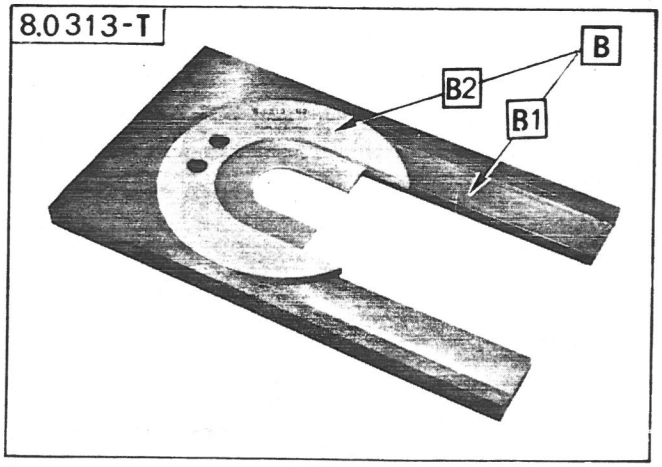

78-362

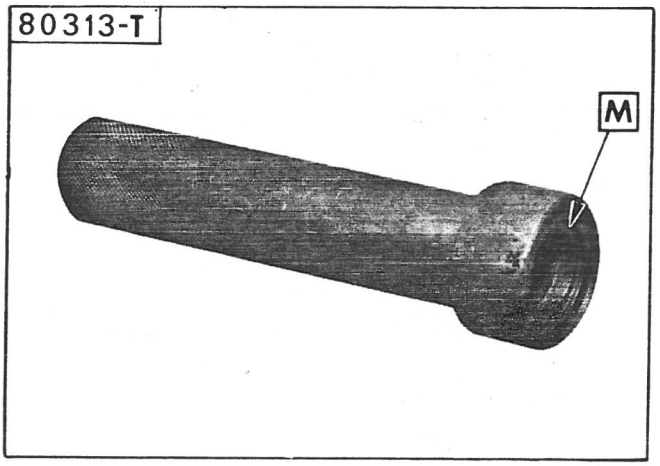

78-354

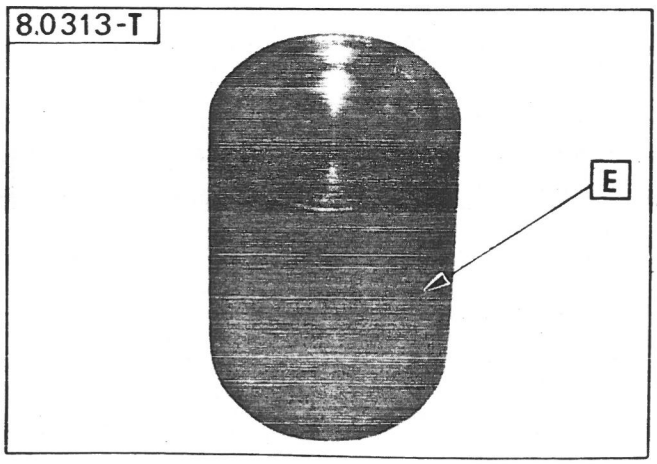

78-322

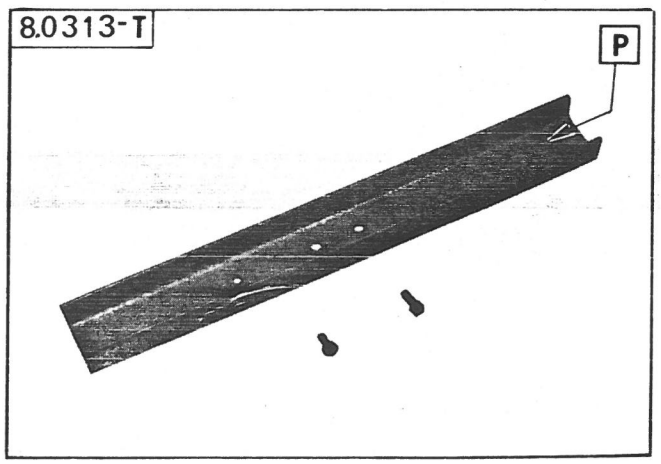

78-237

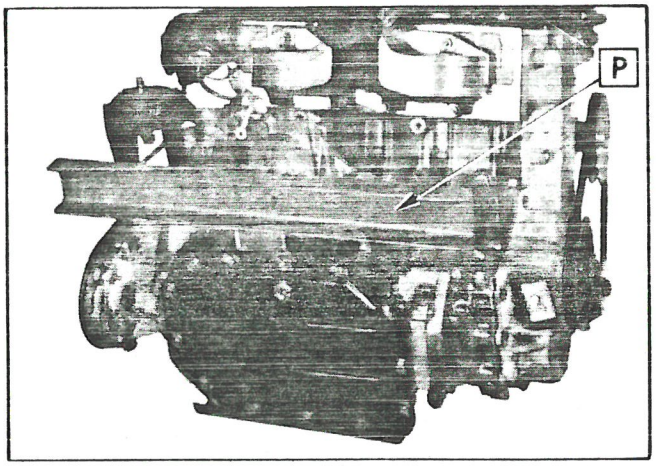

78-1085

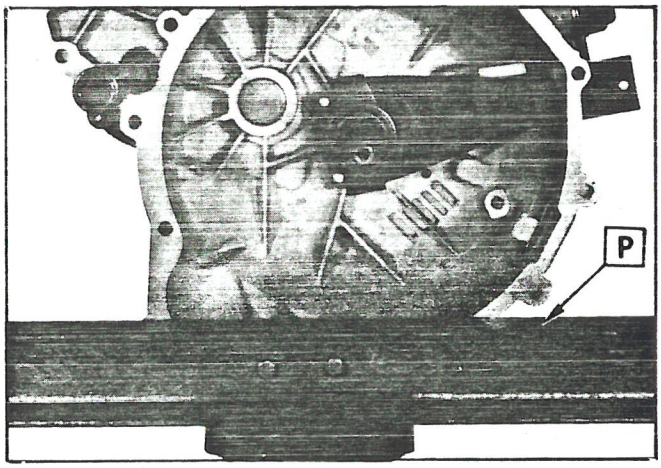

78-235

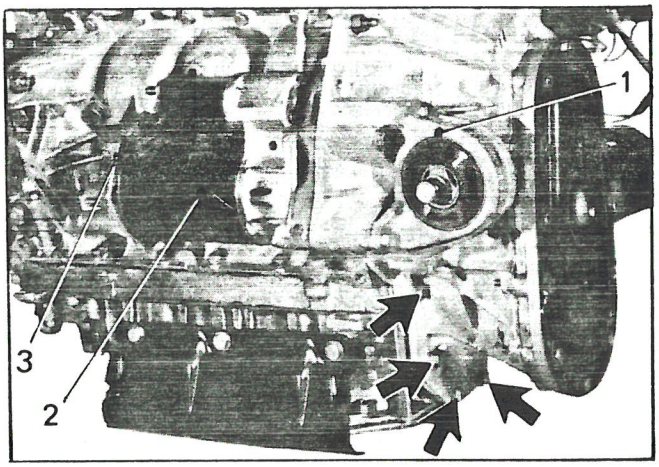

78-845

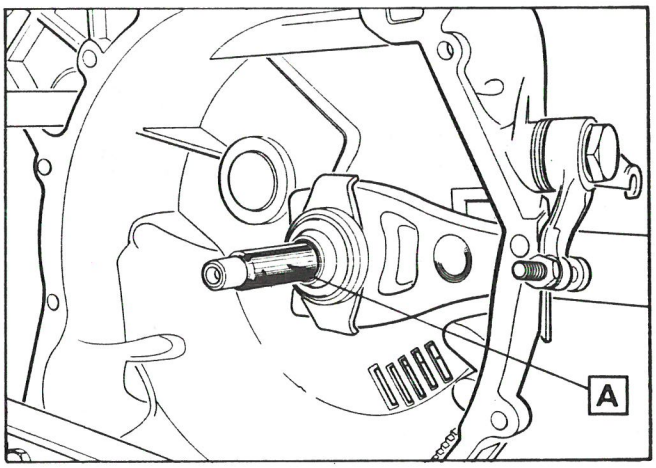

78-898

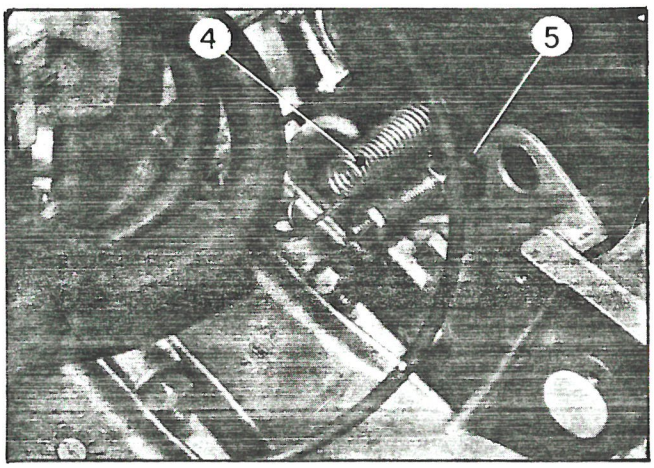

78-871

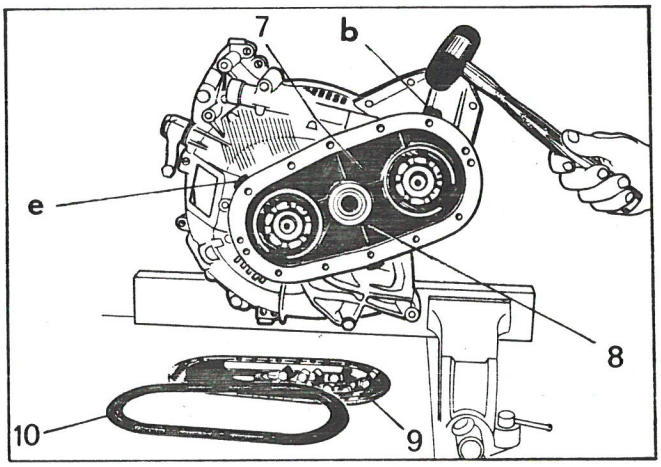

78-231

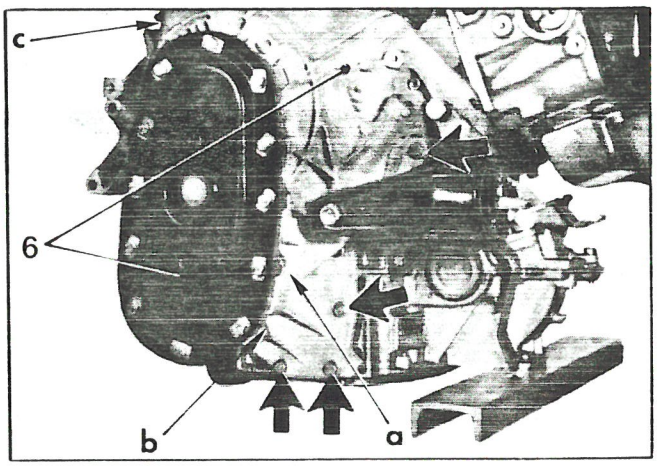

78-872

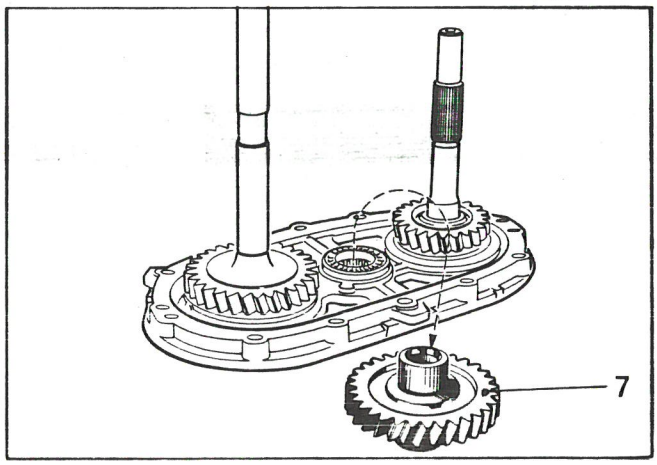

WORKING ON A TRANSFER GEAR ASSEMBLY

This operation requires the removal and refitting of the engine-gearbox unit

STRIPPING DOWN

1. Fix the support [P] under the differential housing.

2. Remove :
- the engine support (1),
- the starter (2) fitted with its rear support (3).

3. Remove :
- the fork spring (4),
- the adjusting push-rod (5),
- the clutch cable sheath stop.

4. Remove the clutch casing mounting bolts (⟶).
(Note, one bolt is located under the oil pipe « a »).

5. Remove the clutch casing-transfer gear assembly unit (6).
(Gently tap bosses « b » and « c » with a mallet to facilitate removal).

6. Remove support bar [P] and fix to clutch casing.

7. Fit protector [A] on the spline shaft.

8. Remove :
- the casing cover plate (9),
- the seal (10),
- the transfer gear assembly-intermediate plate (8) unit,

Tap bosses « b » and « e » gently to facilitate removal.
Take care that the intermediate gear does not fall out (7).

Never use an abrasive or cutting tool for cleaning of the joint faces. Use a rag soaked in a cleaning product.

9. Remove the intermediate gear (7).

I. RENEWAL OF A ROLLER BEARING OR SHAFT

REMOVAL

NOTE : The method is identical for both roller bearings and for the two shafts.
Use a hydraulic press.

10. Remove the shaft and bearing assembly :

a) Locate :
- on plate B1 , the shaft and bearing assembly

b) And on bearing, ring G1

c) Holding the lock ring open as much as possible (1), remove the shaft-bearing assembly with pinchers H

11. Uncouple the bearing (4) from the shaft (5) :

a) Put the shaft in vice fitted with pads, and remove :
- lock ring (2),
- the spring washer (3).

b) Drift out the shaft with a press using an adaptor with a maximum diameter of 24 mm.

FITTING

12. Systematically renew :
- the lock rings (1) and (2),
- the spring washer (3).

13. To fit the bearings :

a) Fit the bearing between ring G1 and taper G2 with groove « a » facing ring G1 .
Coat the assembly in engine oil.
b) Fit the lock ring (1) into its housing.
c) Insert the assembly into the casing by hand (ring G1 facing upwards) until the lock ring is housed between taper G2 and the bearing.
d) Using the press, push the lock ring home into the bearing groove.

14. To fit the shafts :

a) Engage the shafts on the bearings at the end opposite the lock ring (1).

The engine shaft (6) is at the narrower end of the intermediate plate.

b).Fully engage shaft (2) using the press with the assistance of ring G1 .

78-847

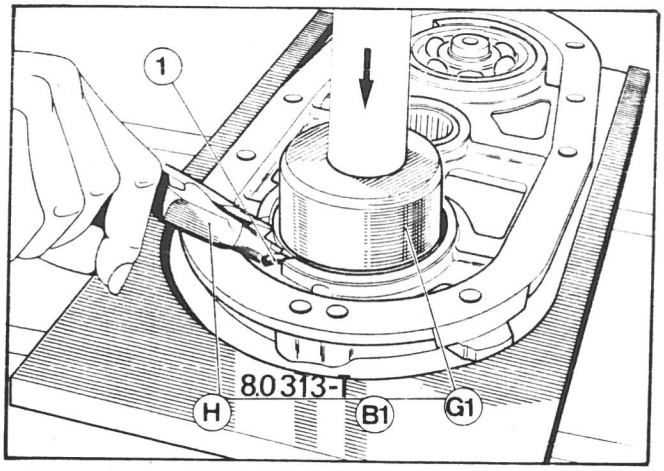

78-867

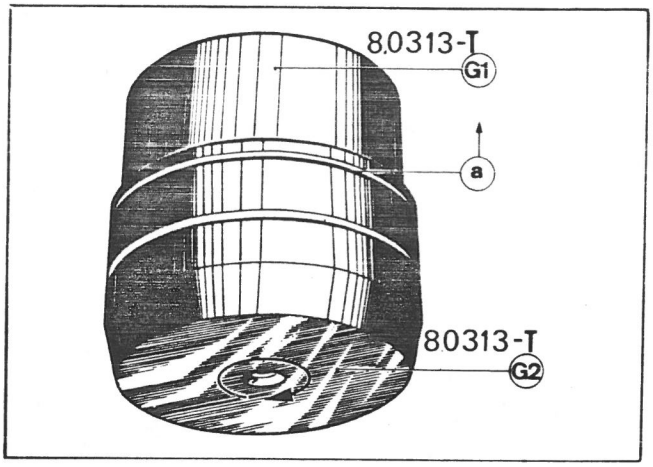

78-869

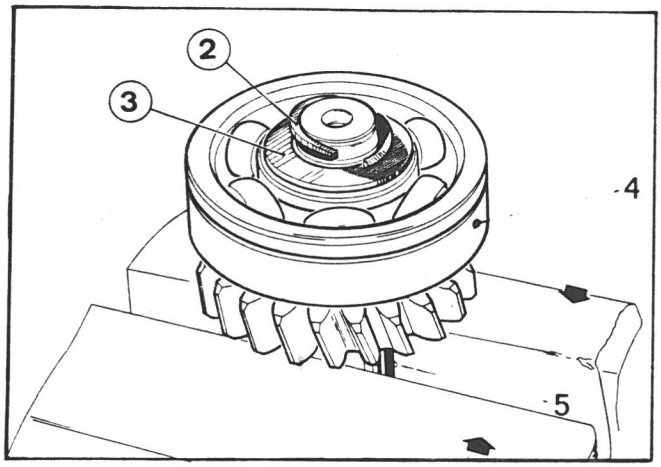

78-868

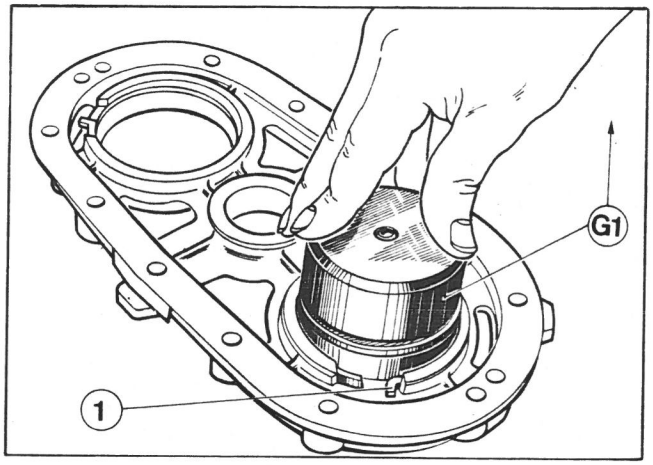

78-870

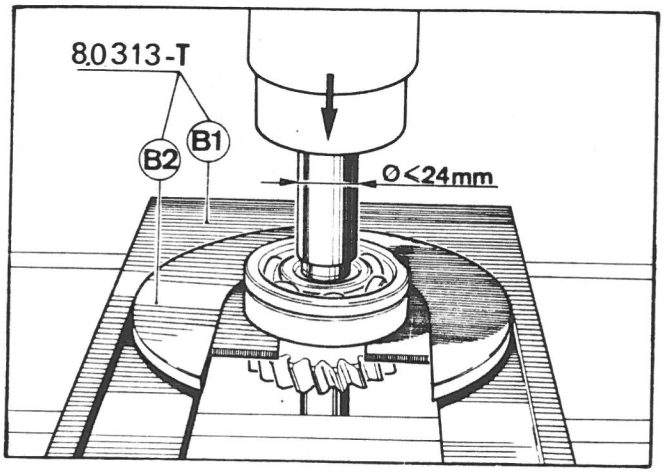

78-840

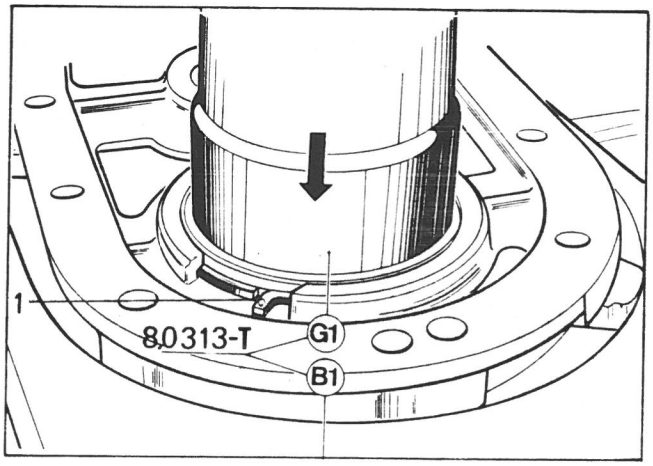

78-829

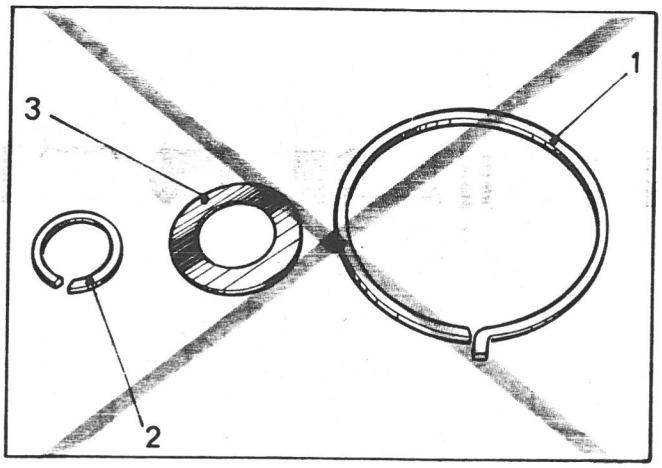

78-842

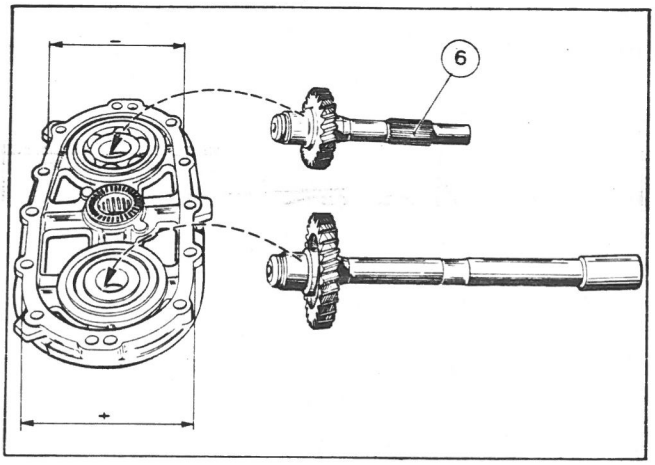

78-843

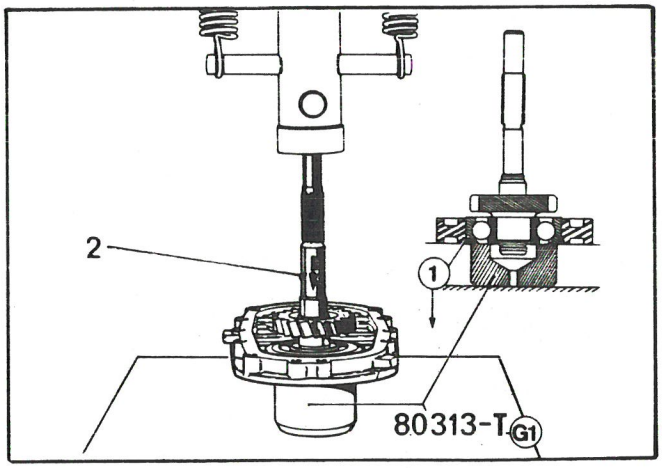

78-854

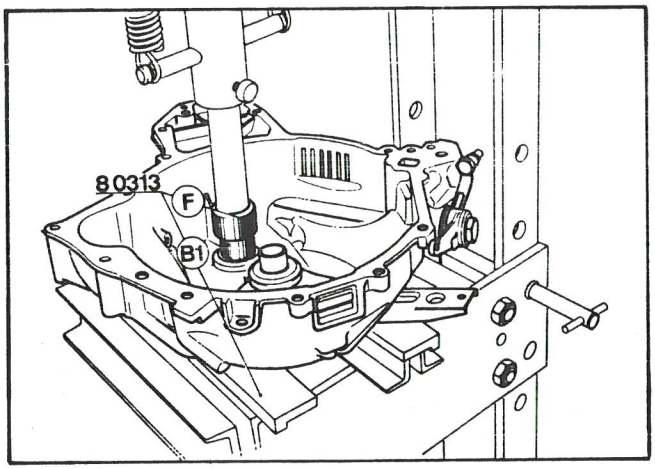

78-848

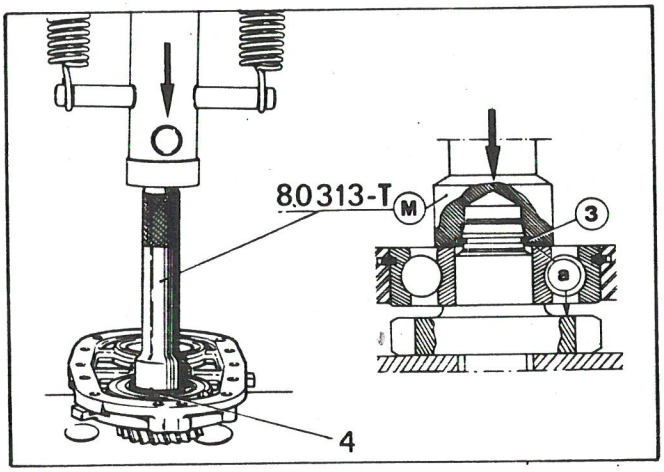

78-851

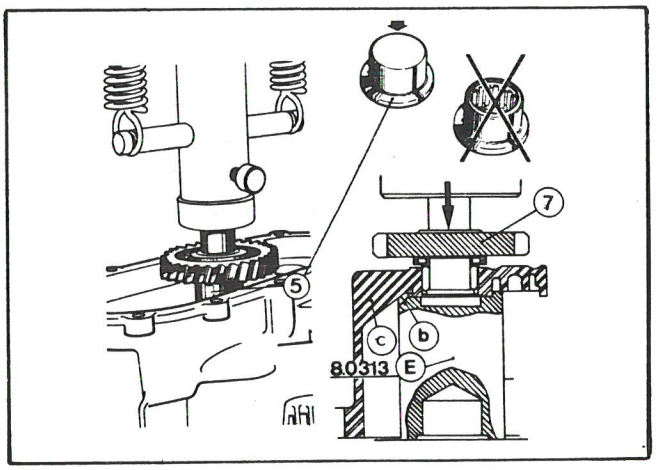

78-830

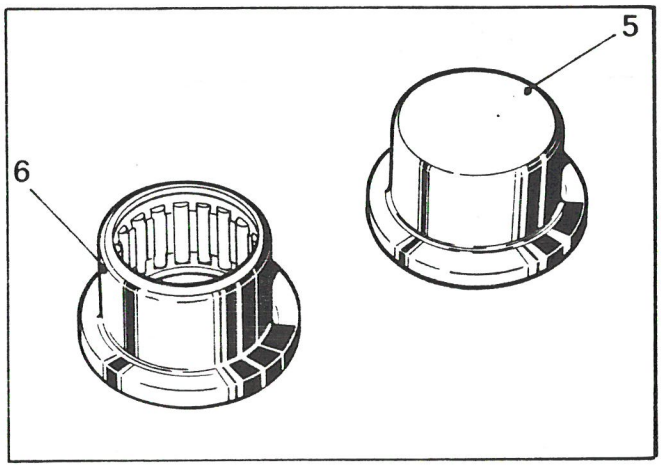

78-852

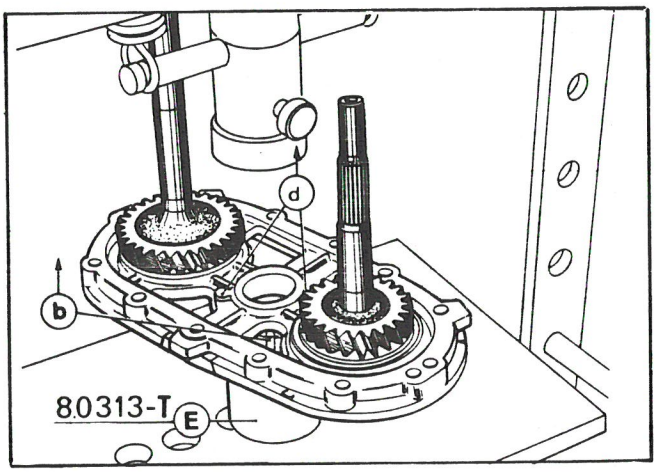

78-853

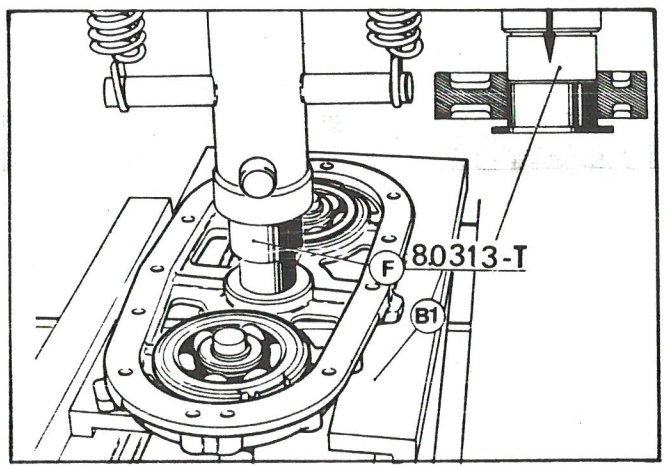

78-846

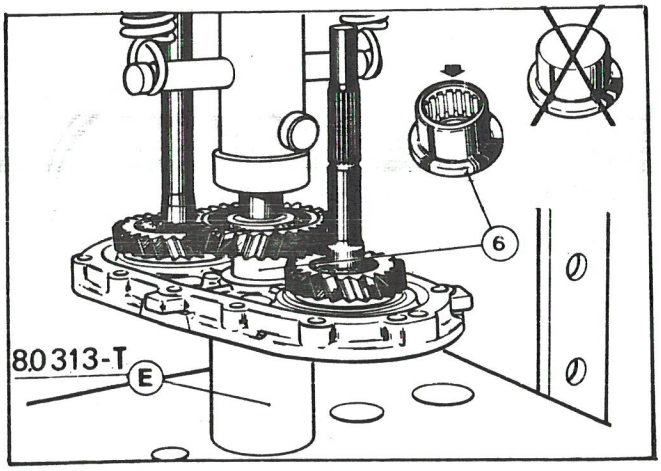

15. Offer the elastic washer (4) onto the shaft.

16. Fit the stop ring (3) with a press and with the assistance of drift [M]

> Ensure the ring enters the housing perfectly square. Maximum exterior diameter of the ring in place : 22.6 mm (0.888 in).

II. REPLACEMENT OF THE NEEDLE ROLLER BEARING OF THE INTERMEDIATE GEAR.

REMOVAL

17. To remove the needle roller bearing from the intermediate housing it is necessary to use a press.

18. Press the bearing out using a mandrel [F] and support plate [B1] beneath the housing.

19. Removal of the needle roller bearing (5) from the clutch housing :

20. Press the bearing from the housing using a support plate [B1] and a mandrel [F]

FITTING

21. Fit the blind ended needle roller bearing (5) into the clutch housing :

a) PLace the housing onto the support [E] the flange « c » locating into the slot « b ».

b) Locate the bearing (5) as far as the stop with the aid of the intermediate pinion.

> Do not overload the press once the bearing has seated to the stop.

Fit the needle roller bearing (6) into the intermediate housing.

> Do not fit a blind ended bearing.

a) Place the intermediate housing onto the support [E] slot « b » and ribs « d » towards the top.

b) Locate the bearing (6) as far as the stop with the aid of the intermediate pinion.

> Do not overload the press once the bearing has seated to the stop.

III. REPLACEMENT OF OUTPUT SHAFT SEAL.

The clutch housing shaft seal is not available separately.
Replace the support bearing seal assembly (1) only when necessary.
a) Oil ingress into the clutch housing,
b) Replacement of an output shaft.

22. Remove the clutch housing :
- the release bearing (2),
- the fork (3),
- the bearing (4),

To extract the bearing (4) place the housing on the support [E] and press out with the aid of a mandrel [F] with its smaller diameter downwards.

23. Fit the new bearing into the clutch housing :

a) Apply a coating of MOLYKOTE 32 IR onto the inner surface of the bore, into which the bearing will be fitted.

b) Leave to dry.

c) Locate the new bearing assembly as far as the stop using the support [E] and mandrel [F] (the small diameter upwards).

Ensure the bearing is perfectly seated and accurately aligned within the housing.

ASSEMBLY

24. Use clean and undamaged parts.
Mating surfaces « a », « b », « c » and « d » must have no dents, scratches, or deformation.
Maximum out of true of « a » using *a straight edge and feeler gauge :*
- 0.05 mm (0.0019 in) between two points 100 mm (3.937 in) apart.
- 0.10 mm (0.00394 in) between two points more than 100 mm (0.00394 in) apart.

Maximum out of true of « a » in relation to « b » 0.15 mm (0.0060 in) (« b » is checked on a flat surface using a dial gauge 2437-T). Ensure the two centralizing studs are fitted.

25. Systematically replace :
- the seal (5),
- the locking rings,

Oil the ball bearings and needle bearings.
Coat the mating surfaces with a sealing compound.

26. Fit the intermediate housing :
- the intermediate pinion *(this pinion should be fitted the correct way round).*
- **the three upper pinion surfaces must be on the same plane,**
- the seal protector **A**.

27. Fit the clutch housing :
- the intermediate transfer gear housing assembly,
- the seal (6),
- the cover plate.

III. RENEWAL OF AN ENGINE SHAFT SEAL

The non-removable shaft seal on the clutch casing is not supplied separately.
Replace the seal-guide bush assembly (1) only if necessary :
a) due to oil in the clutch casing,
b) when changing an engine shaft.

22. Remove the following from the clutch casing :
- the thrust bearing (2),
- the fork (3),
- the bush (4). To extract it, stand the casing on stand [E] and move the bush with a press fitted with removal tool [F] with the narrow end facing downwards.

23. To fit the new bush (4) into the clutch casing :

a) Coat the wall of the bore « a » which is to receive the bush with MOLYKOTE 321 R varnish.

b) Leave to dry.

c) Push home to new (4) bush assembly
Use stand [E] and fitting tool [F] (narrow end facing upwards).

Check that the bush (4) is perfectly aligned with the casing.

ASSEMBLY

24. Use parts which are clean and free of all defects.
On assembly surfaces « a », « b », « c » and « d », there should be no trace of dents, scratches or distortion.
Maximum out of flatness on surface « a » *(straight rule, set of shims)* :
- 0.05 mm between two points 100 mm apart,
- 0.10 mm between two points over 100 mm apart.

Maximum out of parallel on surface « a » in relation to surface « b », **0.15 mm** *(surface « b » on a surface plate, use dial gauge 2437-T).*
Check that the two centering studs « e » are fitted.

25. Systematically replace :
- seals (5),
- the lock washers.

Grease bearings and the needle bearings. Smear the assembly surface with a sealing compound.

26. On the intermediate plate fit :
- intermediate gear,
- the seal protector **A**.

27. Fit the clutch housing :
- the transfer gear assembly-intermediate plate unit,
- the seal (6),
- the blanking plate.

78-841

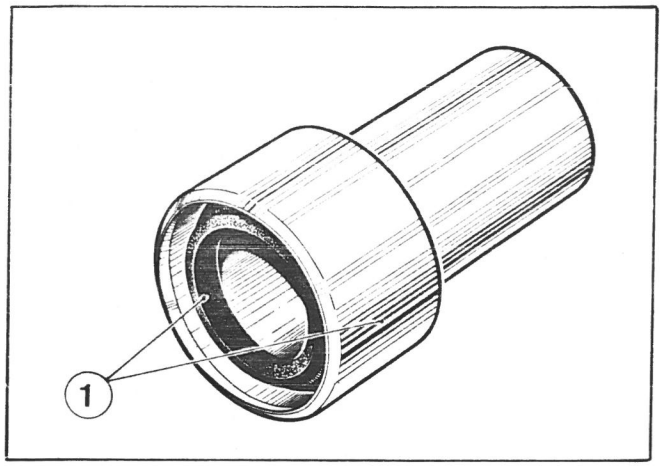

78-878

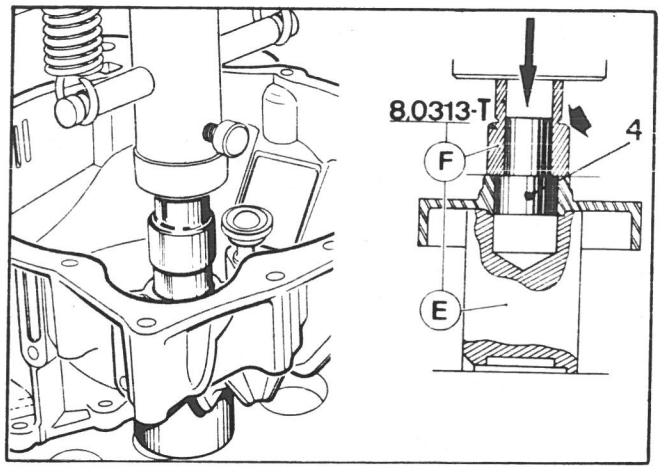

78-849

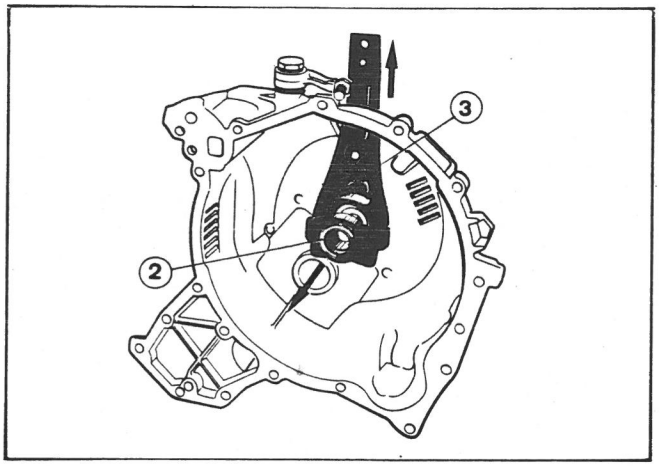

78-836

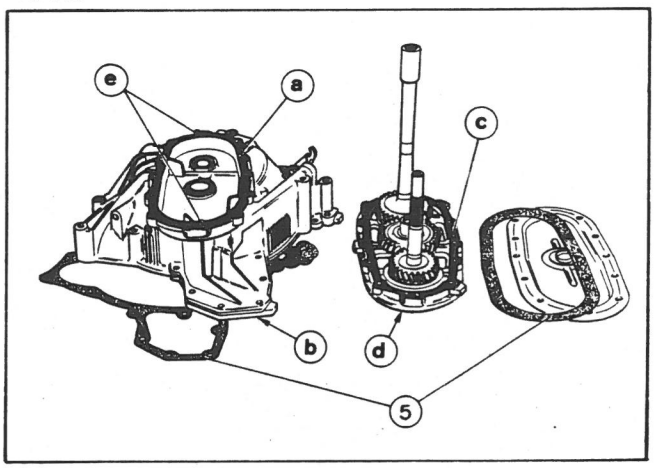

78-850

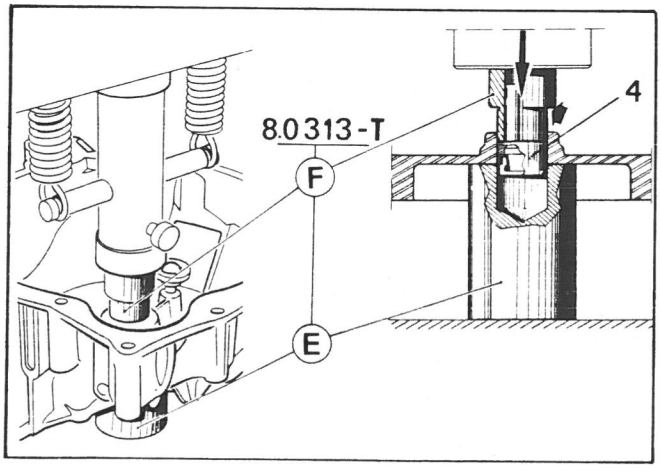

78-873

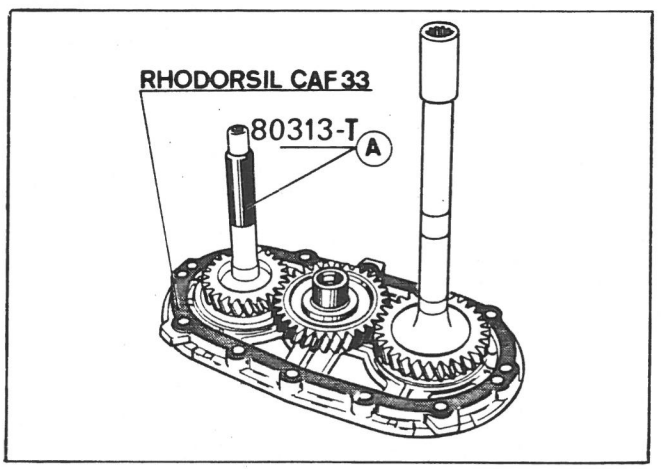

78-877

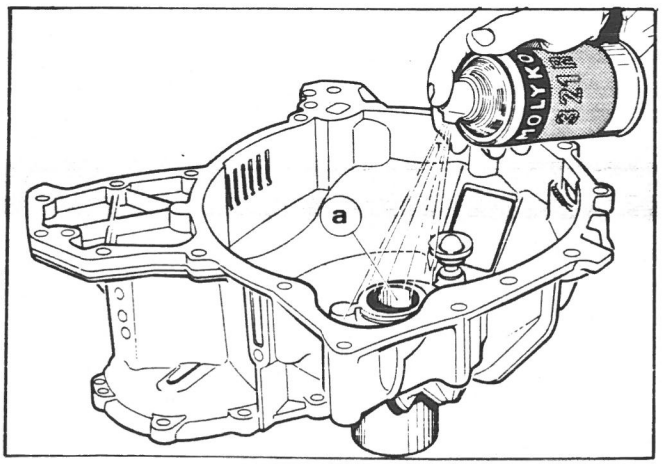

78-874

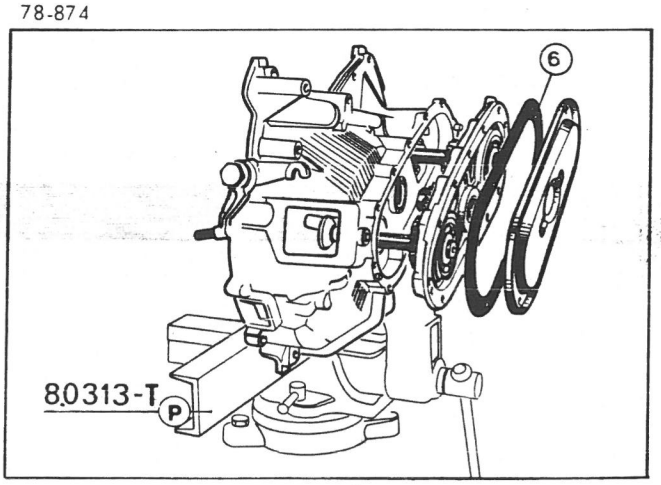

78-837

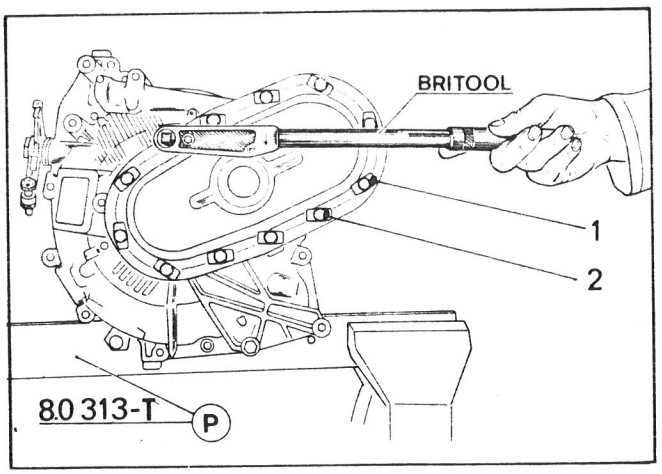

78-1182

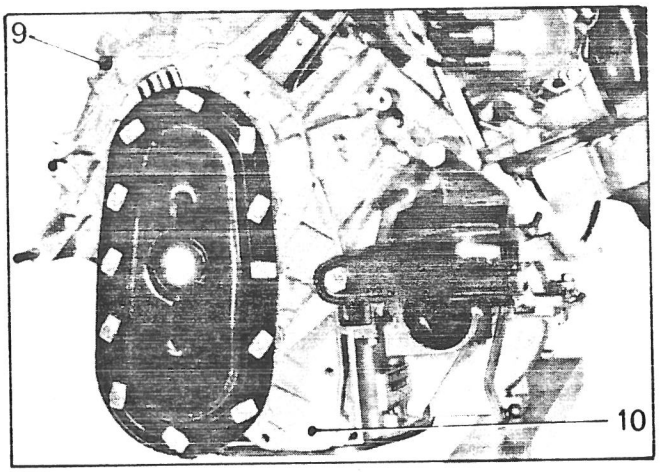

78-879

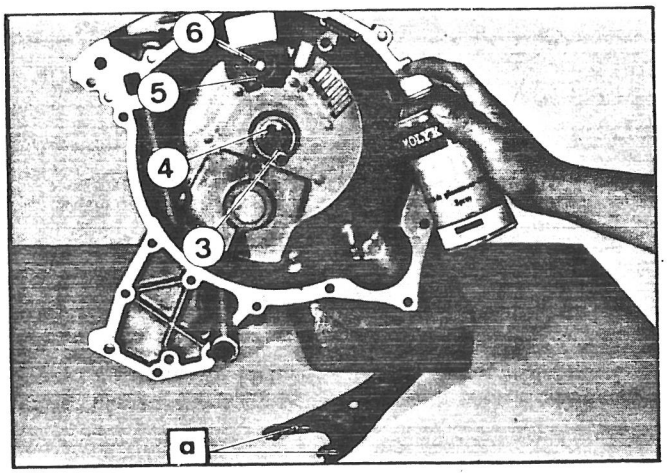

78-1184

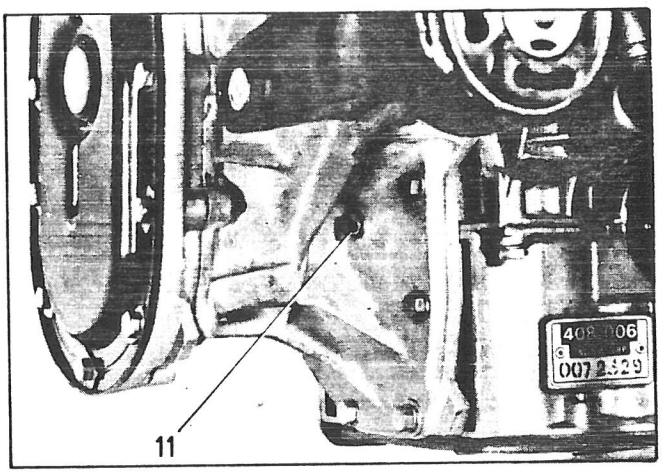

78-880

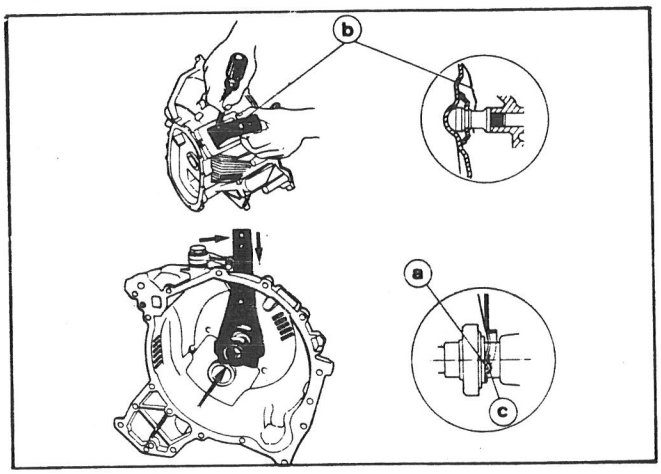

78-235

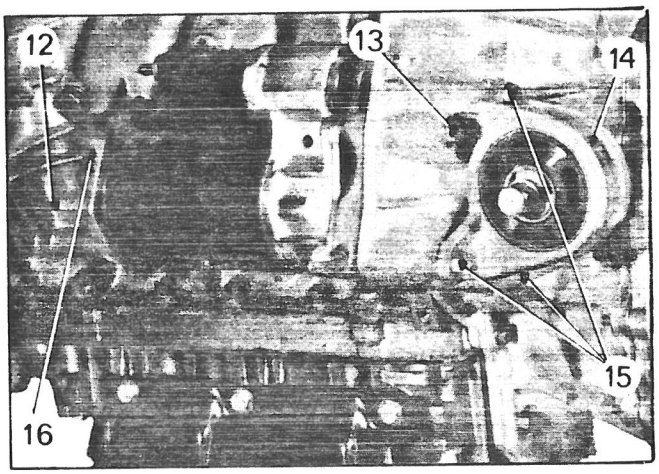

78-1183

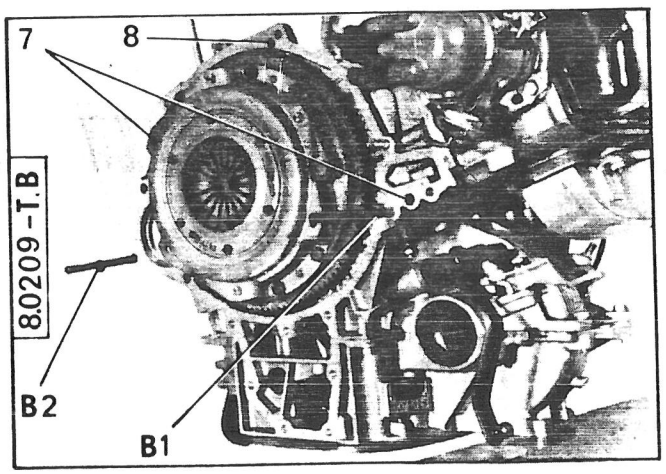

78-898

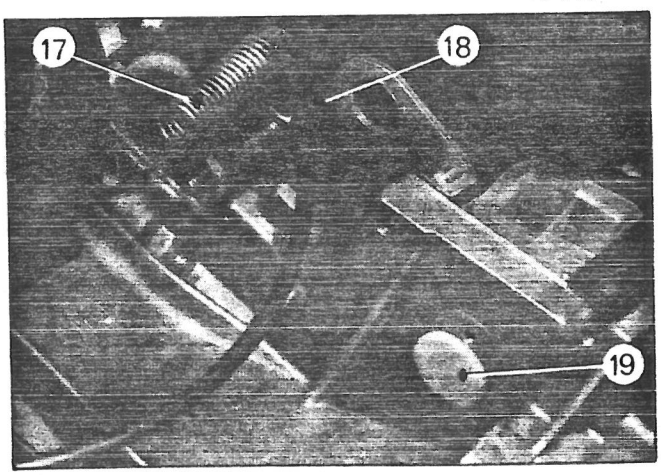

- the plates (1).
- the bolts (2) tightened to torque of 1.1 m.daN.

To carry out this operation, the casing assembly should be fixed in the vice using support [P]

28. Preparation of the clutch casing :

a) Remove the protective sleeve.

b) Apply a fine coating of MOLYKOTE 321 R on the engine shaft (3) and the guide sleeve (4).

c) Check that the rubber cap is in position (5).

d) Grease the following with TOTAL bearing grease :
- the ball-joint,
- the clutch fork ends « a ».

29. Position :
- the fork, spring end « b » under the rubber cap,
- thrust bearing « a », tilt the fork to the maximum.

Fit the « c » loop springs in front of ends « a ».
Slide the thrust bearing onto the sleeve while holding the fork opposite.
Check that the two centering slugs are fitted (7).
Fit a new **dry** seal.
Fit a smooth guide (B2) into the orifice and screw the second guide (B1) into the tapping.

30. Fit the transfer gear assembly casing unit :
(To facilitate engagement of the splines, rotate in turn the gearbox input shaft and the flywheel).

31. Fit :
- the earth terminal extended head screw (9), but do not tighten,
- the bolt (10) (spring washers),
- the hoisting lug,
- the clutch cable sheath stop.

Remove guides (B1) and (B2).

32. Fit :
- all of the clutch casing to engine 7 mm diameter assembly bolts, and do not forget bolt (11) (spring washers).

Tighten all bolts including the extended head screw (9) to a torque of **0.75 to 1.25 m.daN.**

33. Fit :
- the starter (do no tighten the two nuts (12)),
- the bolt (13) (spring washer) and tighten to : **1.5 to 1.75 m.daN**,
- the engine mounting (14),
- the three bolts (15) (spring washers) and tighten to : **1.5 to 1.75 m.daN.**

Tighten the two nuts (12) to a torque of **0.75 to 1.25 m.daN.**
Fit and tighten the two bolts (16) to a torque of **0.75 to 1.25 m.daN.**

34. Fit :
- the white plastic plug (19),
- the push-rod (18) (ends coated with TOTAL bearing grease),
- the spring (17).

OPERATION
VD2. 330-3

RECONDITIONING THE GEARBOX

SPECIAL TOOLING

TOOLS SOLD

KIT 8.0313-T comprising :

B : Press assembly comprising :
- **B1** : Baseplate
- **B3** : Thrust washer
- **B4** : Thrust washer

C : Punch

D : Selector spring removal-fitting fork

F : Main shaft roller bearing assembly plug

J : Primary shaft nut bracket

H : Pinchers for speedometer control and bearing lock rings

K : Primary shaft right hand bearing half-rings

L : Axle output seal assembly plug

N : Roller bearing assembly drift

B : Adapter for removal and fitting of the drain plug (part of kit 8.0133-T)

P : Gearbox and clutch casing support

TIGHTENING TORQUES

Compulsory tightening torques *(torque wrench)*

Tightening point	Torque in m.daN
Main shaft nut	2 to 2.5
Axle crown wheel mounting bolts	5.5 to 7.5
Primary shaft locknut	1st tightening : 2 Final tightening after slackening : 0.75 to 1

Recommended tightening torques :

Tightening point		Torque in m.daN
Drain plug		2.5 to 3
Gear control return lever axle		1.25 to 1.75
Casing half assembly bolts	diameter = 7 mm	1 to 1.5
	diameter = 8 mm	1.5 to 2
Differential bearing and half casing assembly bolt		0.75 to 1.25
Protective plate		1.5 to 2

78-364

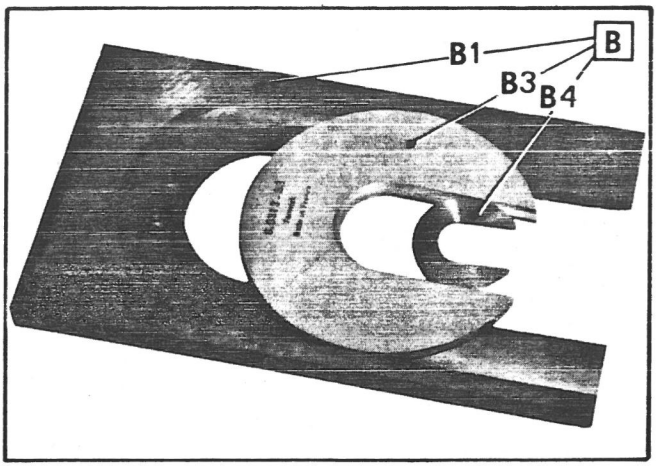

78-361

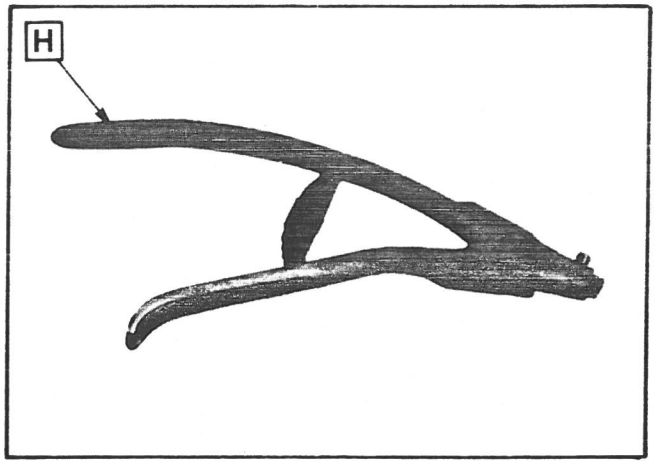

78-360

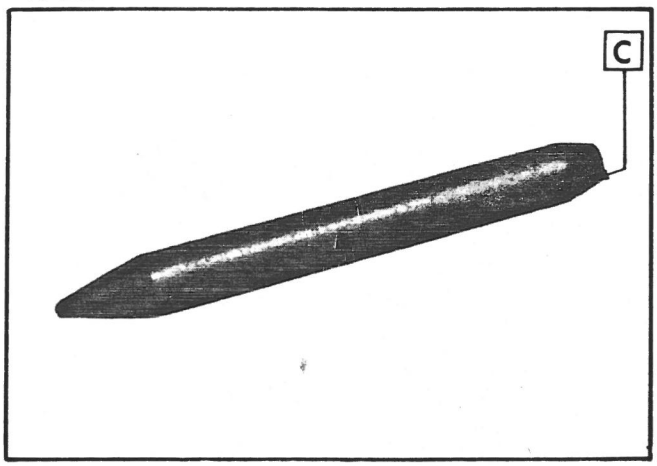

78-356

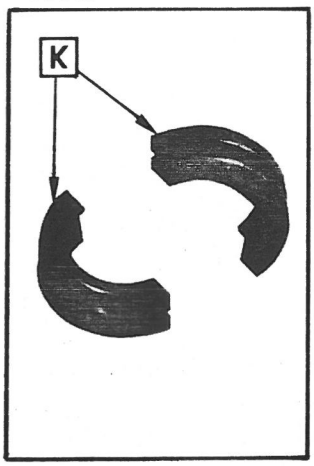

78-359

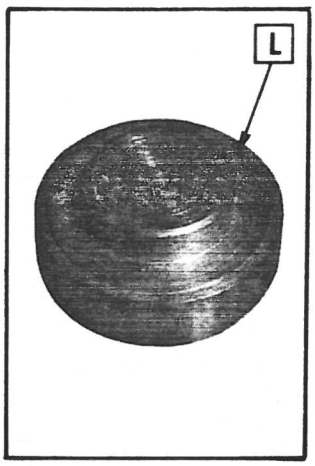

78-353

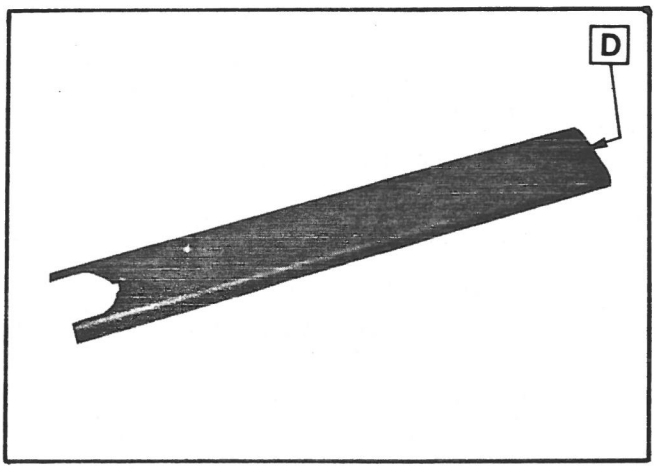

78-357

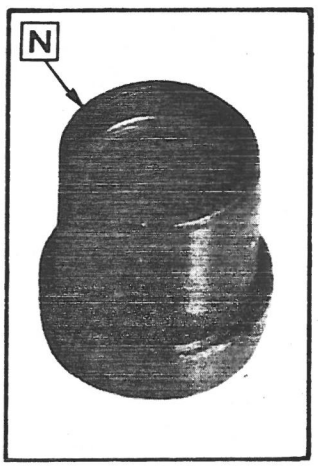

78-367

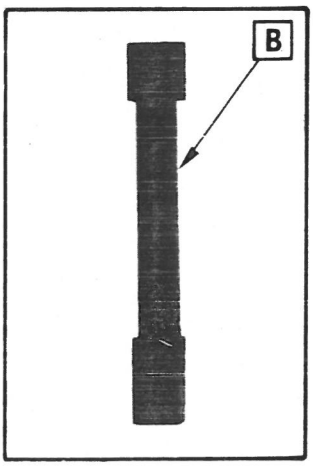

78-355

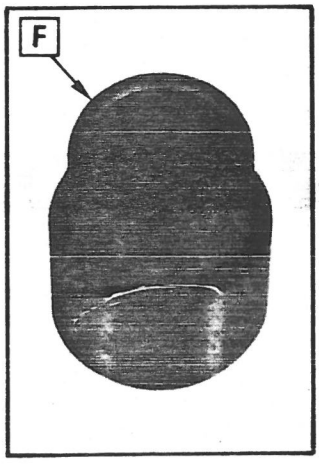

78-366

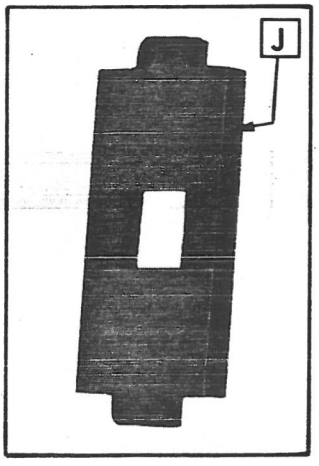

78-322

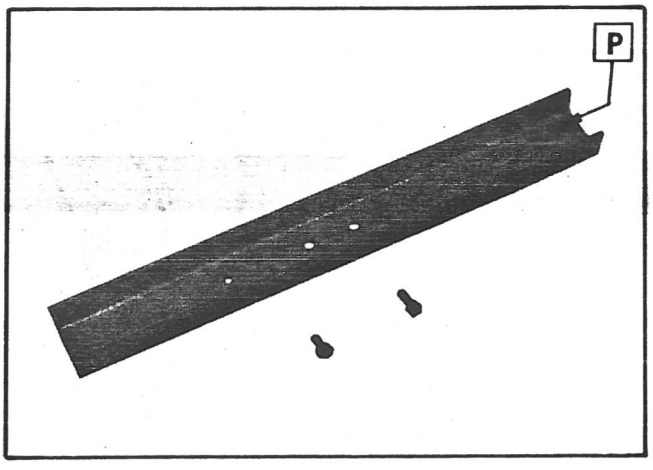

♦ SPECIAL TOOLS

TOOLS SOLD

SET No. OUT 380-313 T comprising :

B : Press support set comprising :
- **B1** : Support plate
- **B3** : Support ring
- **B4** : Support ring

C : Punch

D : Removal-refitting fork for selector spring

F : Mainshaft roller bearing assembly plug

J : Primary shaft nut key

H : Pliers for speedometer drive and bearing lock rings.

KZ : Extrator rings for the primary shaft right hand bearing.

LZ : Axle output shaft seal replacer.

N : Roller bearing assembly tool.

P : Gearbox and clutch housing support.

R : Primary shaft bearing removal and replacement fork *(5-speed box)*.

S : Primary shaft bearing refitting tool *(5-speed box)*

Not shown :

Drain plug key (part of set OUT 380-313-T).

TIGHTENING TORQUES

Essential tightening torques *(torque wrench) :*

Component	Torque in m.daN (ft.lbs)
Secondary shaft nut	9.5 (68)
Crownwheel fixing bolt	5.5 to 7.5 (39 to 54)
ϕ 10 mm crankcase bolts	4.5 (32.5)
Primary shaft lock nut *(four speed gearbox)*	1st tightening : 2 (14.5) Final tightening : 0.75 to 1 (5.5 to 7) (after slackening)
Primary shaft locknut *(five speed gearbox)*	4.5 (32.5)

Recommended tightening torques :

Component	Torque in m.daN (ft lbs)
Drain plug	2.5 to 3 (18 to 22)
Interlock plugs	1.25 (11)
Gear selector return lever pivot	1.25 to 1.75 (11 to 12.5)
Case half assembly bolts ϕ 7 mm	1 to 1.5 (7 to 12)
Case half assembly bolts ϕ 8 mm	1.5 to 2 (12 to 14.5)
Differential bearing and half casing bolts	0.75 to 1.25 (5.5 to 11)
Cover plate	1.5 to 2 (12 to 14.5)
Reverse gear locking plate *(five speed gearbox)*	1 (7)
Oil strainer bolts	1 (7)

78-364

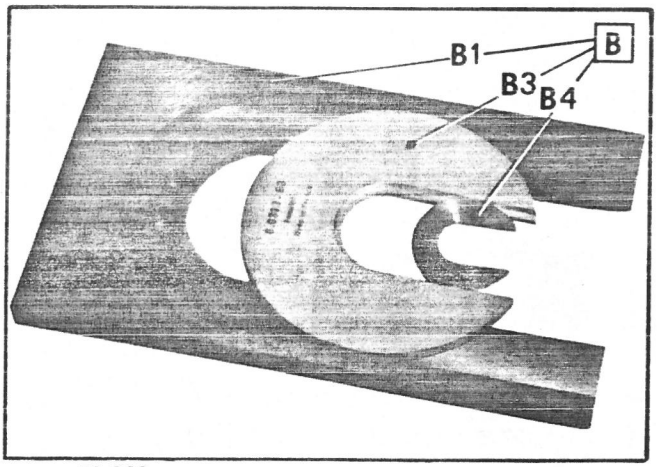

78-356

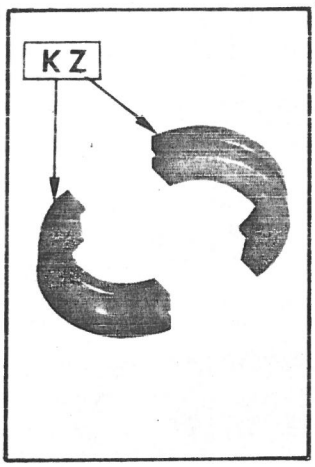

78-359

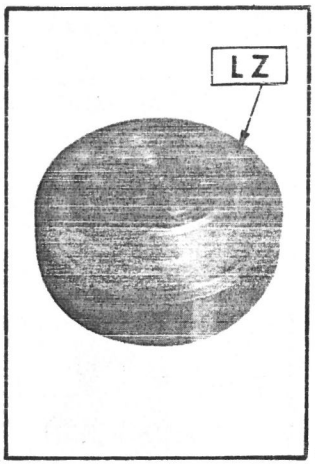

78-360

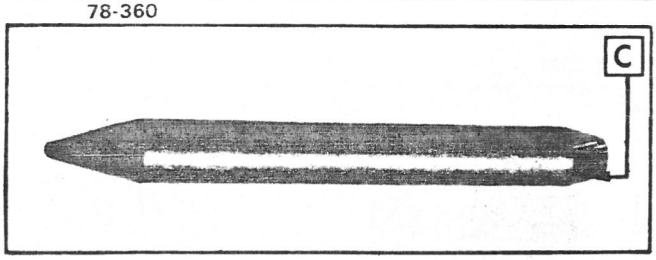

78-357

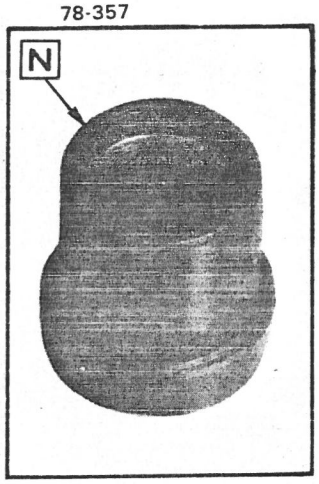

81-954

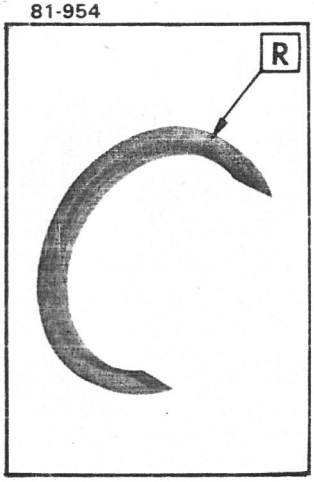

78-353

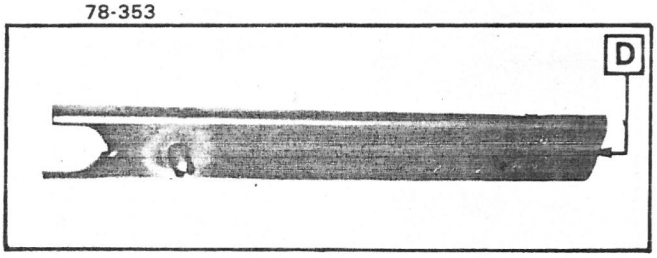

78-355

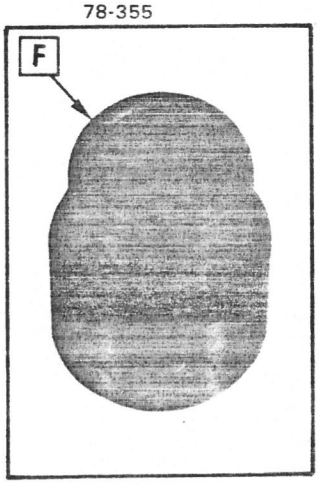

78-366

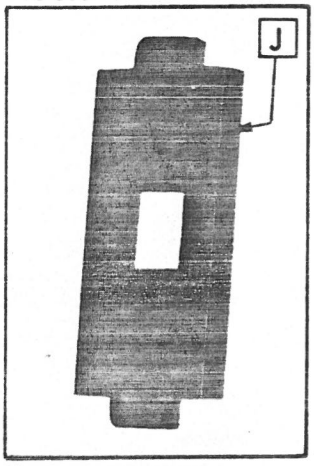

78-322

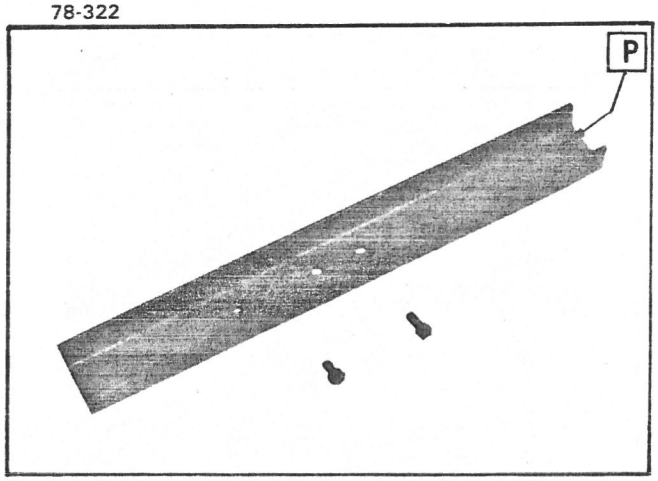

78-361

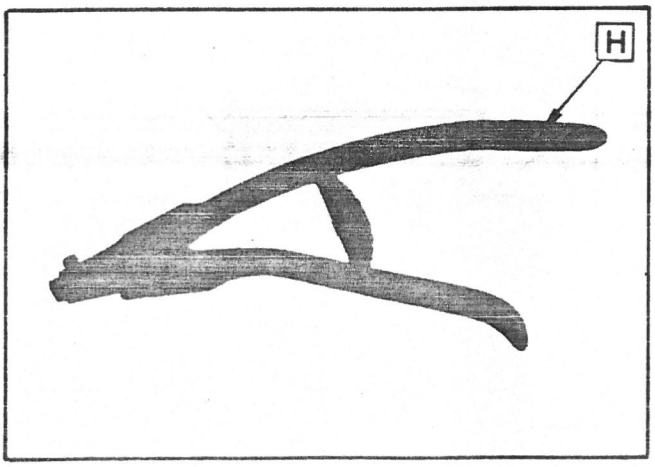

81-953

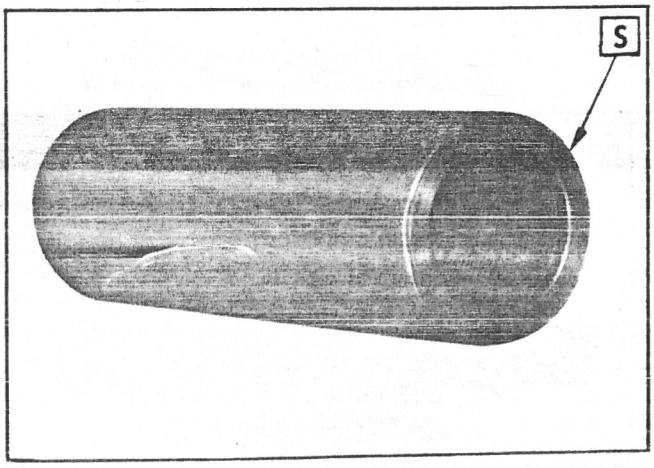

78-1089

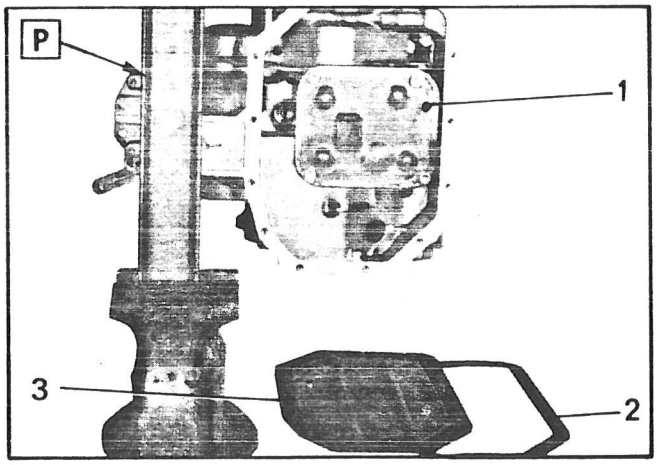

78-1098

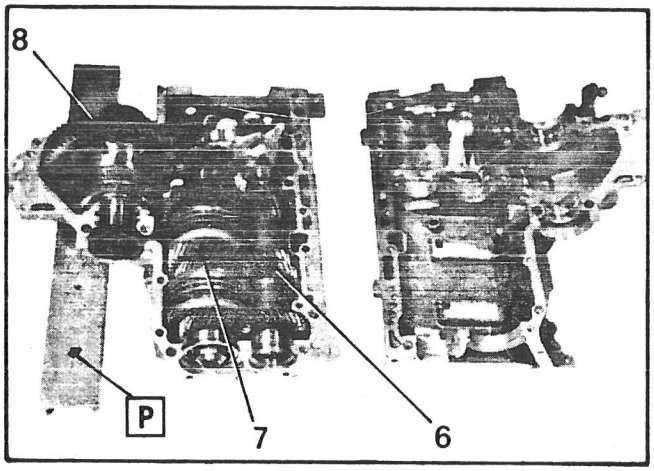

78-1151

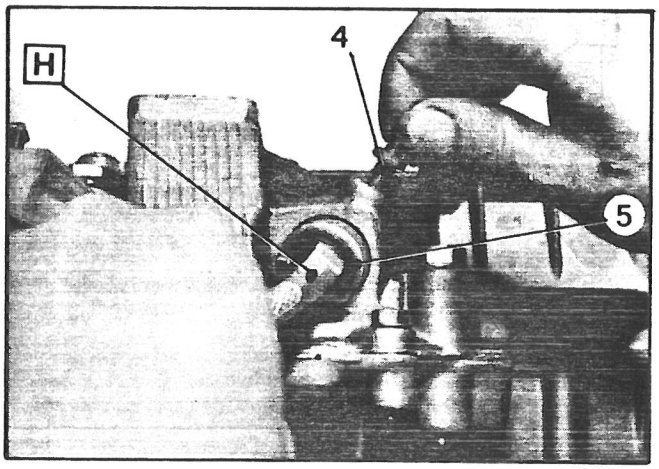

78-1096

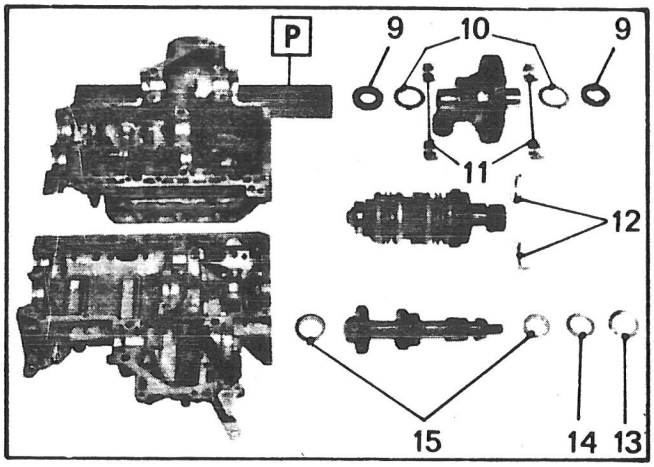

78-1087

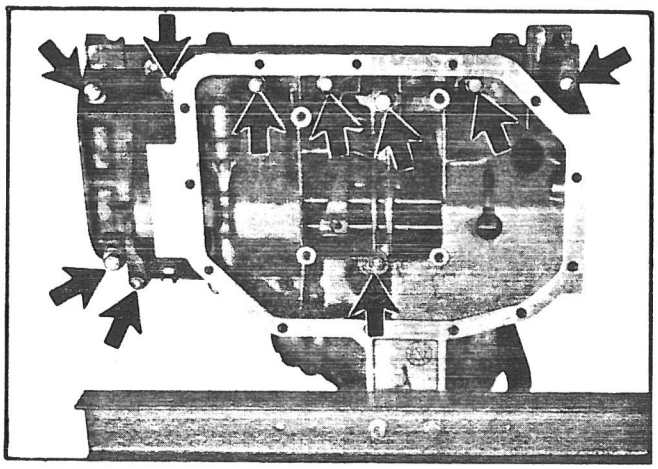

78-1088

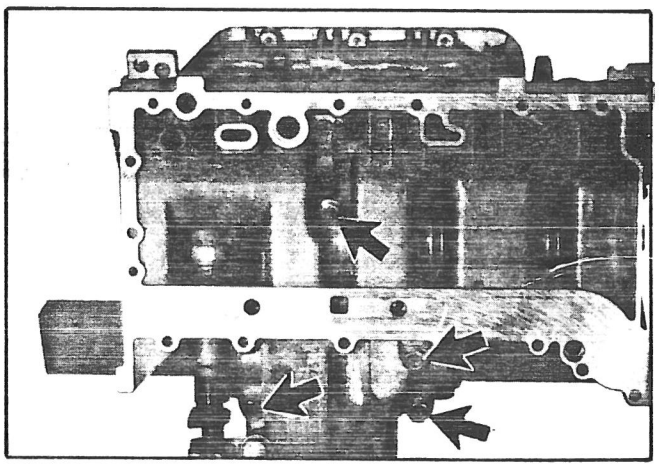

78-1099

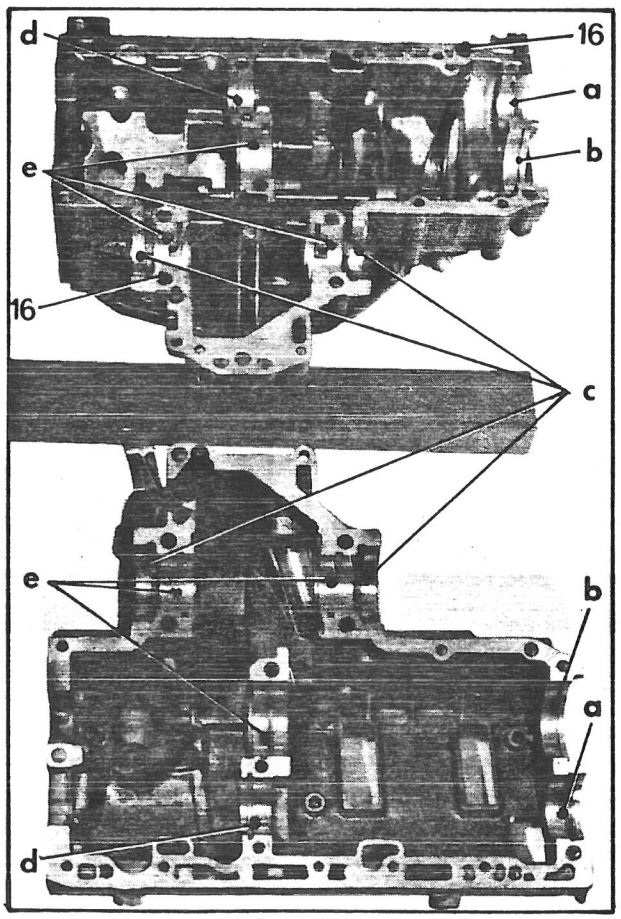

78-1089

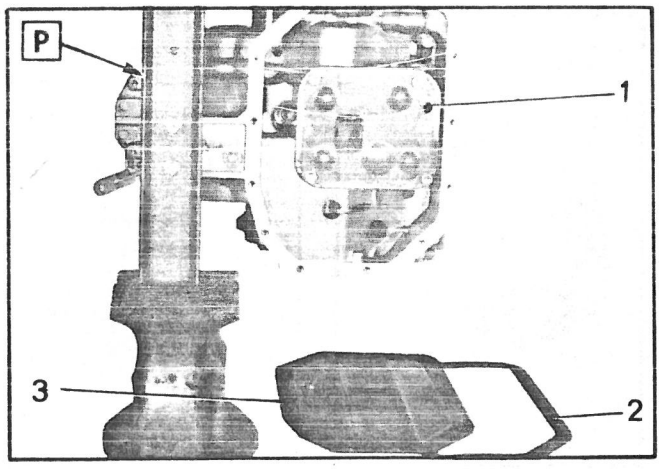

78-1098

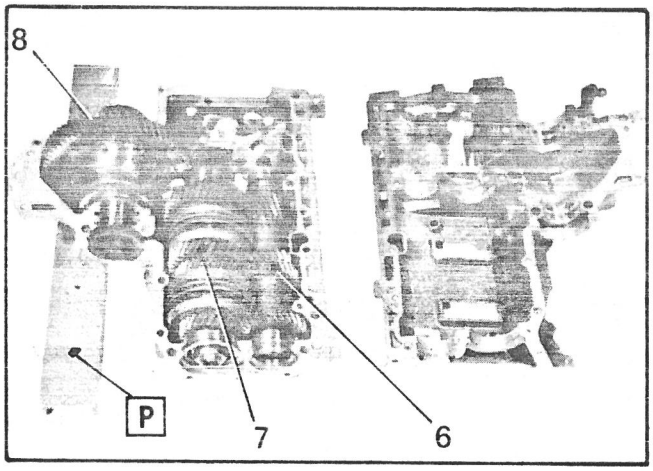

78-1151

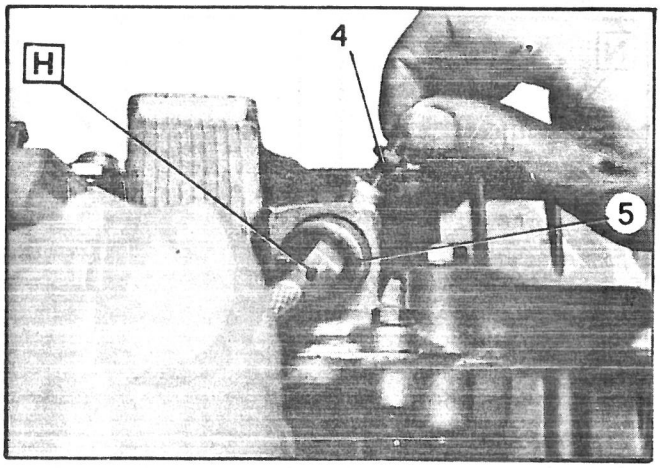

78-1096

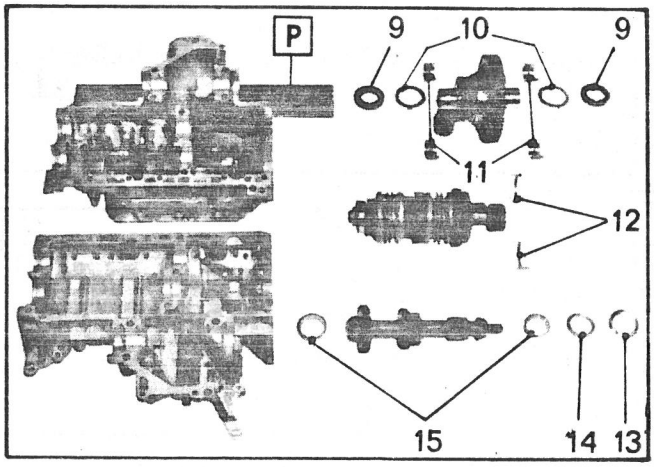

78-1087

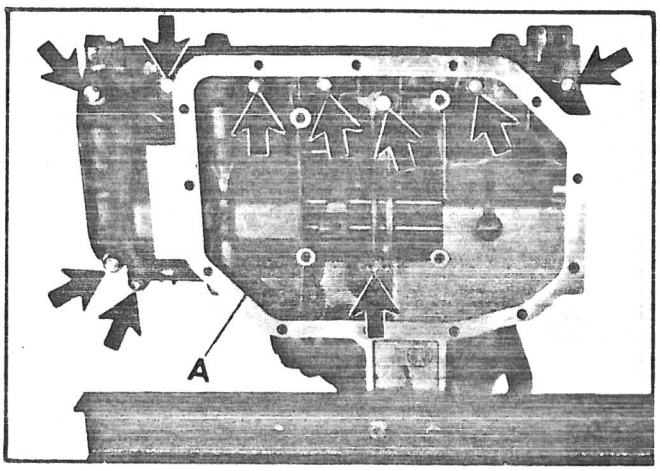

78-1088

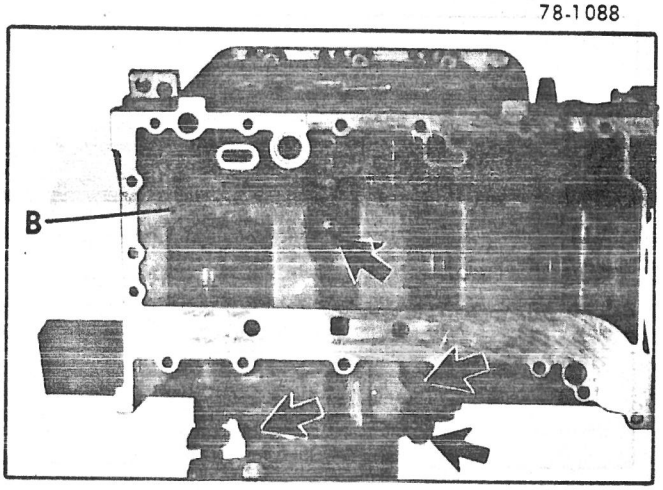

78-1099

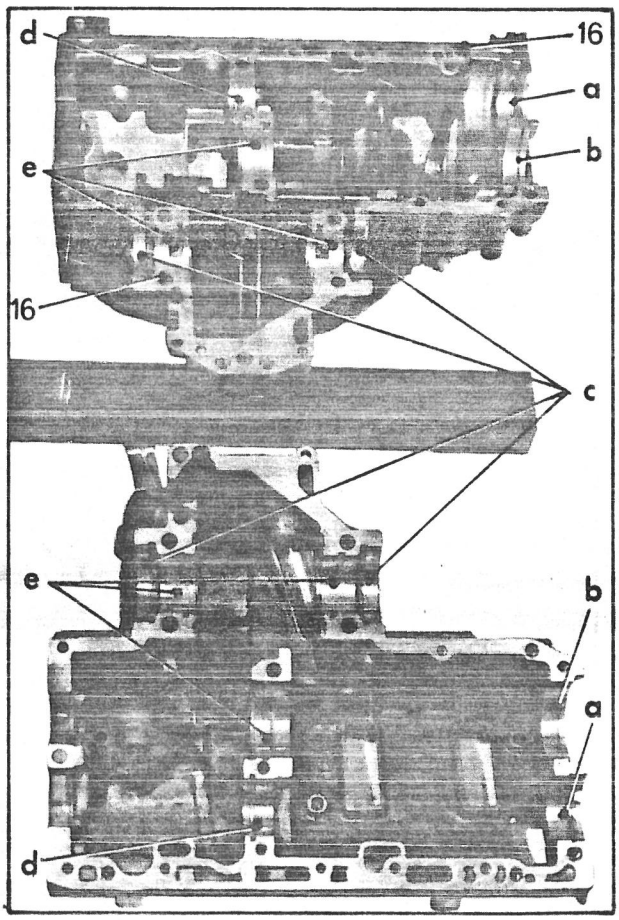

RECONDITIONING THE GEARBOX

DISMANTLING.

1. Fix the support bracket [P] onto the gearbox and clamp it into a vertical position.

2. Remove :
- the cover plate,
- the bottom sump cover (3) and seal (2),
- the oil strainer,
- the bolt (4) and bush (5) using the pliers [H] .

♦ **3.** Slacken the 19 bolts (⟶) and remove only the 12 bolts from the lower case half.

> Protect all gasket mating surfaces from damage during operations.

Lay the gearbox flat and remove the remaining 7 bolts from the upper case half.

4. Remove :
- the primary shaft (6),

♦ 4 speed box, outer bearing races (15) the stop ring (14) and lock nut (13).

♦ 5 speed box LH bearing and 5th speed synchronizer.

- the secondary shaft (7) and the half rings (12).

> Mark the position of the half rings if they are to be re-used.

Remove :
- differential (8) with : seals (9), shims (10), half rings (11).

CHECKING THE CASE HALVES.

> The case halves must be replaced as a pair, being matched at manufacture.

5. Clean the case halves including the mating surfaces with a solvent soaked rag.
Blow out the oilways.

6. Visually inspect the condition of the case halves, in particular the housings for :
e : the half rings
b : the bearing lock ring
d : the stop ring
c : the seals
a : the two centring studs (16) and the threads and machinings on the primary shaft.

> Maximum out-of-true of the mating surfaces : **0.10 mm (0.0040 in)**.

♦ REPLACING PRIMARY SHAFT BEARINGS.

These bearings once removed should not be re-used.

Five speed box :
Remove the LH bearing and 5th speed synchronizer (7).
Mark the synchronizer to ensure correct replacement (large shoulder « a » to the outside).

7. Removal of the RH bearing :

A- Four speed box :
Use support plate [B1] support plate [B3] and extractor rings [KZ] .

B- Five speed box :
Secure the primary shaft into a vice (soft jaws).
Remove :
- the retarder nut (6),
- 5th speed hub (5) marked « b »,
- 5th speed pinion (4),
- ring (3) and washer (2),

The upper bearing (1) and the two spacer washers.
Use the support plate [B1] support ring [B3] and replacement fork [R] .
- outer ring of the second bearing,
- the inner race,

Use the support plate [B1] support ring [B3] and half rings [KZ]

8. Removal of LH bearing :

Four speed box :
Use support plate [B1] and support rings [B3] and [B4]

9. Refitting RH bearing :

The components of a bearing are matched : ensure this matching is respected.

A- Four speed box :
Use the alignment tool [N] boss « c » downwards.
Locate the bearing up to the stop.

B- Five speed box :
Locate the two bearings and intermediate washers with the aid of the alignment tool [S] and if necessary the support ring [B3] .
Fit :
- washer (2).
- ring (3) of 5th speed pinion,
- 5th speed pinion (4) *(truncated teeth « b » outwards)*.
- the nut (6) **tightening to 4.5 m.daN (32.5 ft lbs)** and locked with a smooth-edged tool,
- the synchronizer (7).

10. Refitting the L.H. bearing :

A- Four speed box :
Use alignment tool [N] boss « c » upwards.

B- Five speed box :
Locate the bearing by hand, *rounded side inwards.*

DISMANTLING SECONDARY SHAFT.

11. Dismantling :

a) Fix the secondary shaft into a vice with soft jaws and remove screw (8).

Five speed box :
Remove 5th speed pinion (10).
b) Extract bearing (9) using support plate [B1] and support ring [B3] .
c) Remove :
- spacer (14),
- driven pinion 4th gear (13).

d) Mark the 4th gear synchronizer pinion (12), with letter « d » before removal and at the same time its position on the hub (11) in relation to the synchornizer.
e) Remove :
- the locking key (17),
- the spacer (15),
- 3rd gear pinion (16).

81-959

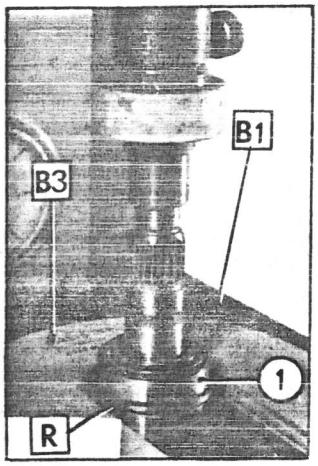

78-1103

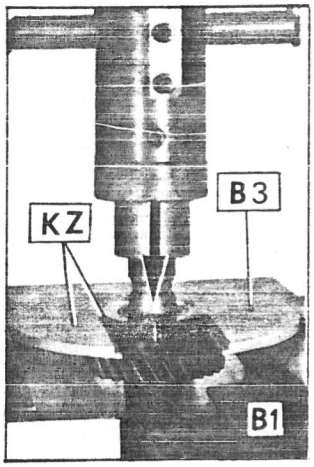

78-834

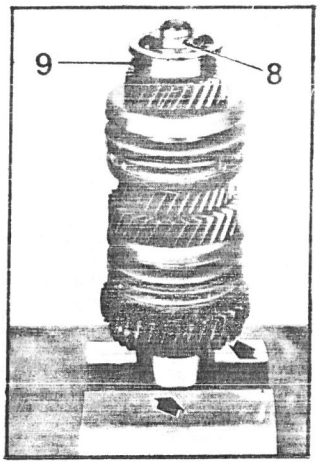

81-340

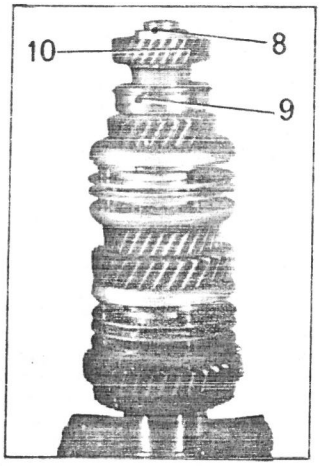

78-1097

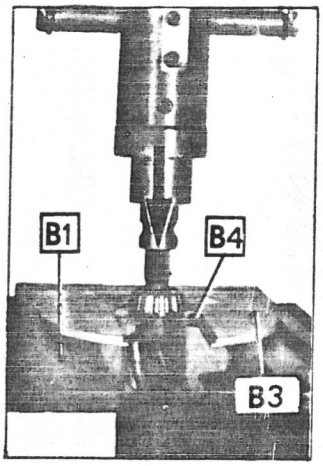

81-961

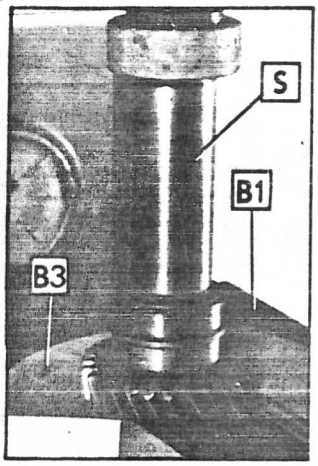

78-876

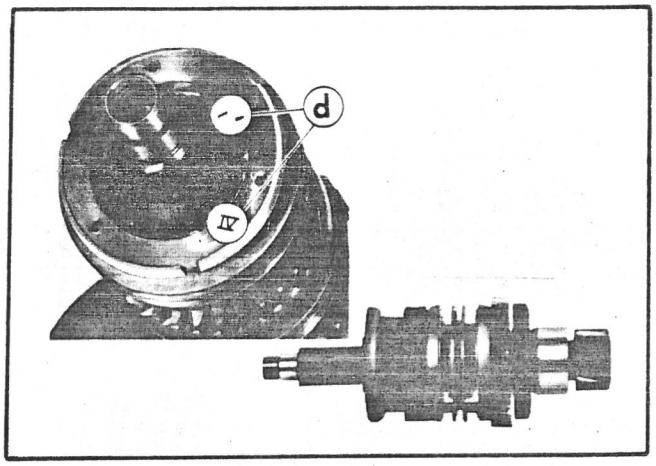

81-342

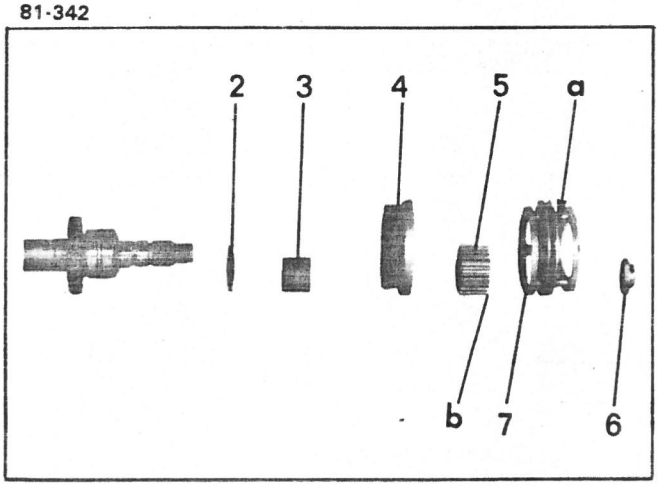

78-876

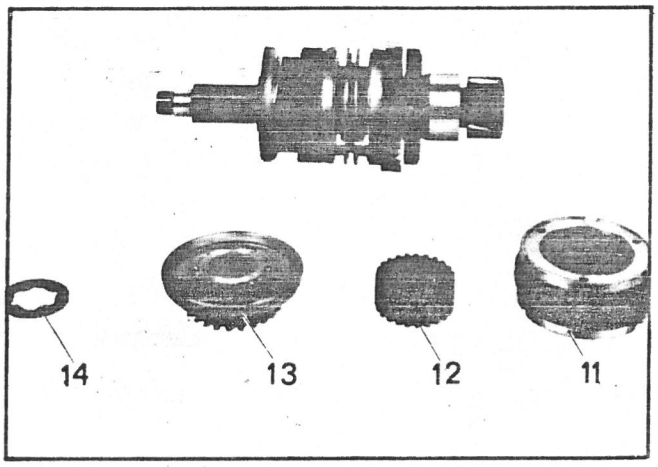

78-1104

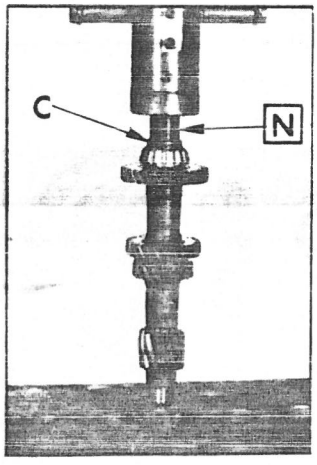

78-1105

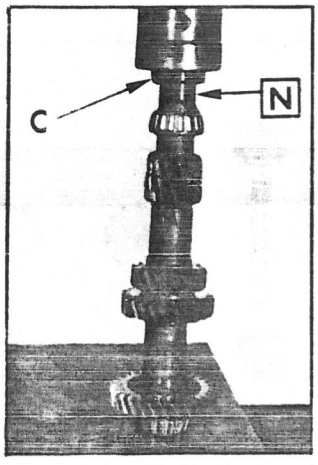

78-856

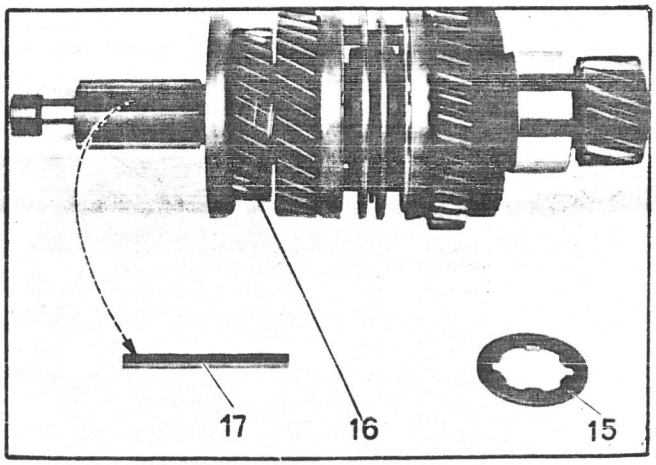

78-866

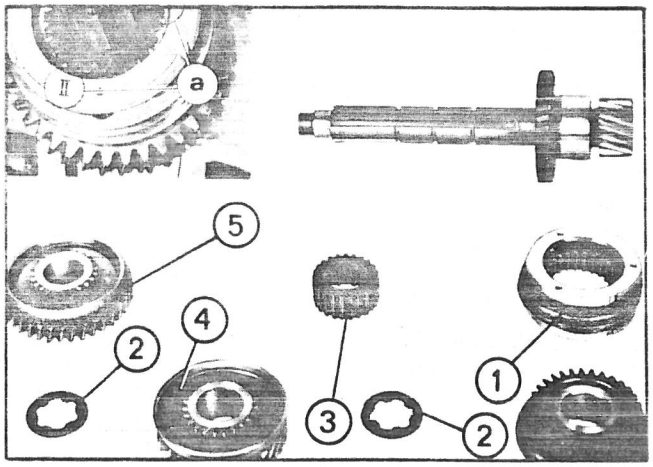

78-835

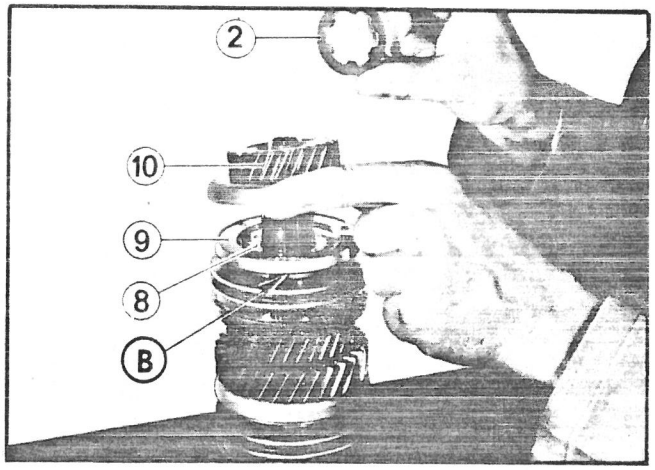

81-349

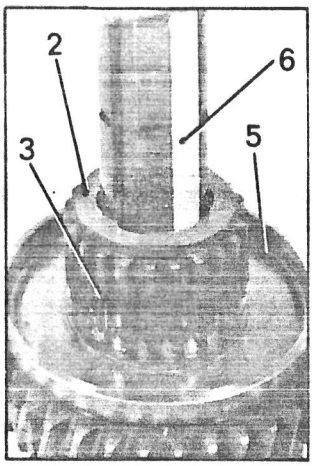

78-833

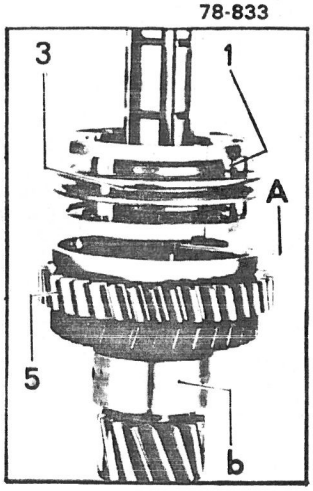

78-861

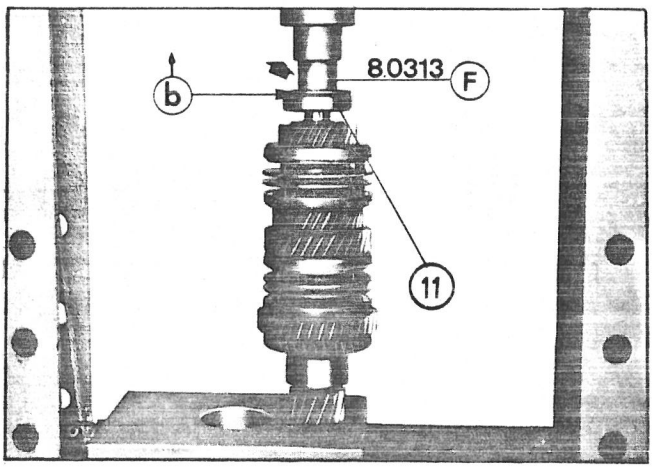

78-863

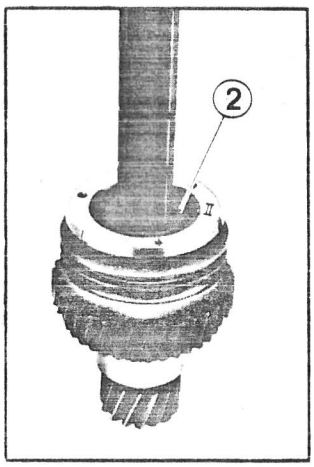

78-864

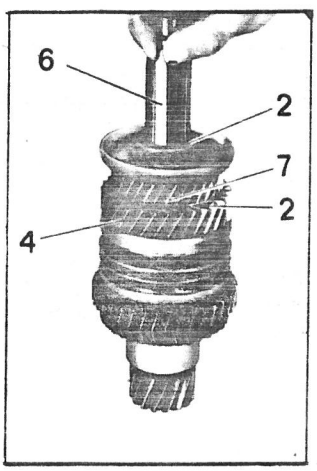

78-862

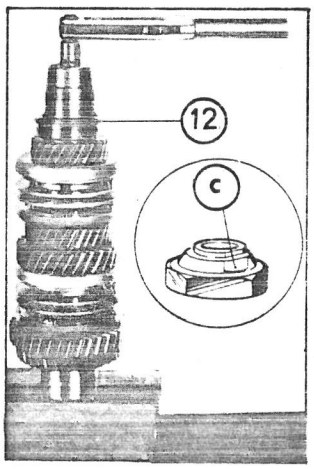

81-340

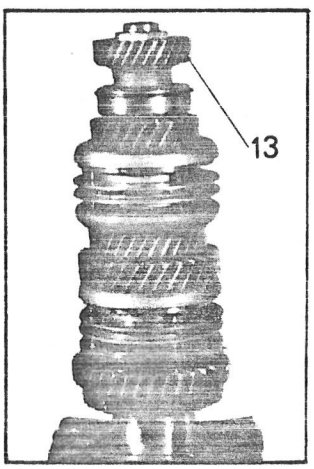

78-864

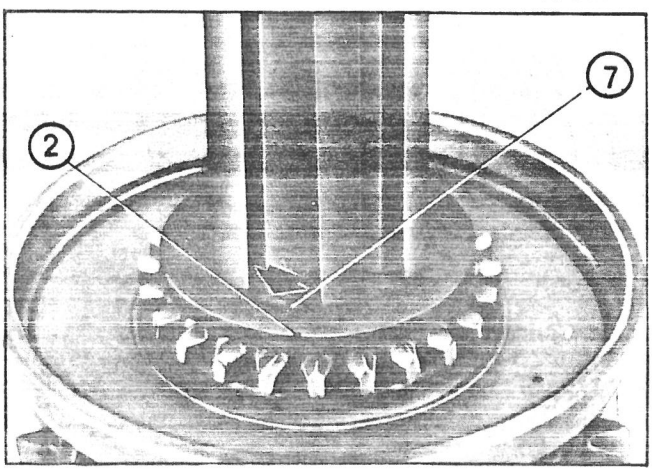

78-858

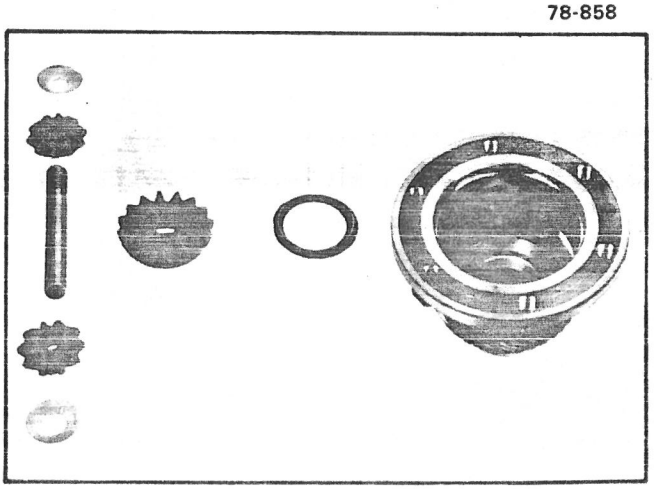

f) Remove :
- the spacer (2),
- the 2nd gear pinion (4),
- the spacer (2).

Mark both components « a » before removing the 2nd gear pinion from the synchroniser(1) and the hub (3).
- the 1st gear pinion (5).

REBUILDING THE SECONDARY SHAFT.

Use only clean and undamaged parts.
The wax used to protect new parts is not soluble in oil and must be removed with white spirit.
Ensure the bearing surface « b » is in perfect condition.
Ensure that :
a) The location of identification marks during dismantling.
b) The relative position of the new hubs and synchroniser units.
Lubricate the parts with engine oil during re-assembly.

♦ **12. Refit :**
- 1st gear pinion (5),
- synchroniser hub (3),
- 1st and 2nd gear synchroniser,

Orientate the lugs (marked at **A**) towards the 1st gear pinion.

- a spacer (2) locked in place and verify the fit of the key (6).

The four spacer are identical (2) but must be orientated to allow the key (6) to pass it full length into the assembly.

♦**13. Refit :**
- 2nd gear pinion (4),
- a spacer (2),
- 3rd gear pinion (7),
- a spacer (2),
- the key (6) bevel inwards located to its full depth depth within the assembly.

14. Refit :
- the synchroniser hub (8),
- the 3rd-4th gear synchroniser.

♦ Orientate the lugs (marked **B**) towards the 3rd gear pinion (7).

- the 4th gear pinion (10),
- spacer (2).

15. Refit the bearing :
Locate the bearing (11) (groove « b » outwards).
Use the refitting mandrel [F] .
Press fully home to the stop.

♦ **5 speed gearbox :**
Fit 5th speed pinion (13) *(shoulder outwards).*

16. Refit the nut :
a) Fit a *new* locknut.
Torque : 2 to 2.5 m.daN
Lock the nut on flat « c ».
b) Fit a *new* circlip (12) in the bearing groove.

DISMANTLING THE DIFFERENTIAL

17. Remove :
- the crownwheel bolts,
- the planet wheels and thrust washers at casing end,
- the satellite gear axle,
- the satellite gears and their friction washers.

REBUILDING THE DIFFERENTIAL.

18. Fit the planet wheels :
Place the thrust washer (1) (grooved side « a » towards the gear) into the housing.
Fit the planet wheels (2).

19. Fit the satellite gears :
Locate :
- the spherical friction washers (5),
- the satellite gears (4),
- the satellite gear axle (3).

20. Fit the differential :
Locate the housing onto the crownwheel.
Fit **new bolts** *(the satellite gear axle must be secured between two bolts).*
Torque : 6 m.daN (43 ft lbs).

DISMANTLING THE SELECTOR FORKS AND GEAR CHANGE LEVERS.

21. Remove :
- the blanking plugs (6) and (7),
- the three springs and balls.
(In case of difficulty in removing the balls, use a 7 mm dia. drift after removing the fork spindle).

♦ **For speed gearbox :**
- the reverse gear fork pin (8).

♦ **Five speed gearbox :**
- pin « c » of the locking plate,
- reverse gear balls and 5th speed spindle from « b »,
- ball from reverse and 5th gear relay lever.

4 speed and 5 speed
- the reverse gear fork spindle,
- inter lock disc (9).

22. Remove the pins and dismantle :
- the fork (10) of 3rd and 4th gear and its spindle,
- the fork (11) of 1st and 2nd gear and its spindle ; remove reverse gear fork,
- reverse idler shaft (14) thrust bearing (18) and idler pinion (13).

23. Remove the selector lever :
Remove :
- the selector lever (15),
- the arm (16) after having driven out the pin,
- the four half-cups (17) with the aid of tool [D] .
- the control lever (18),
- seal (21).

REBUILDING THE SELECTOR FORKS AND THE GEAR CHANGE LEVERS.

♦ **Oil the parts as the re-assembling proceeds.**

24. Fit the new gear change lever :
Fit *new* O-ring seal (21) *at « b »*.
Fit the gear change lever with its spacer (20) insert spring (19) and thrust bearing (18).
Fit the four half cups with the aid of tool [D] .
Fit the arm (16) and the pin *(two concentric pins of diameters 7 mm and 4 mm).*
Grease spindle (22) and fit selector lever (15) as per diagram *(magnified).*
Torque : 1.25 to 1.75 m.daN (11 to 12 ft.lbs).

79-388

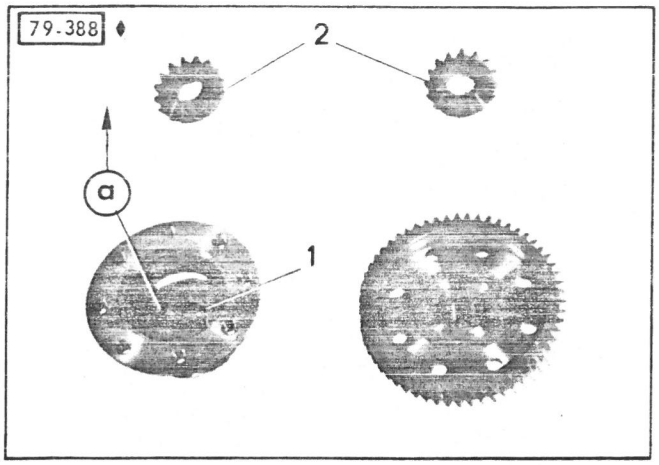

78-1123

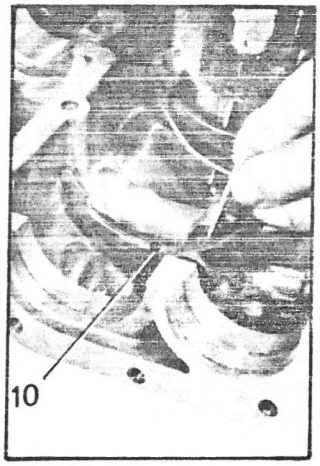

78-1121

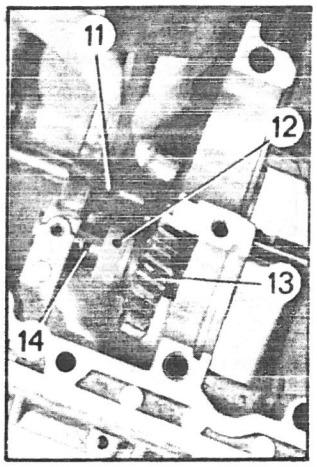

78-860

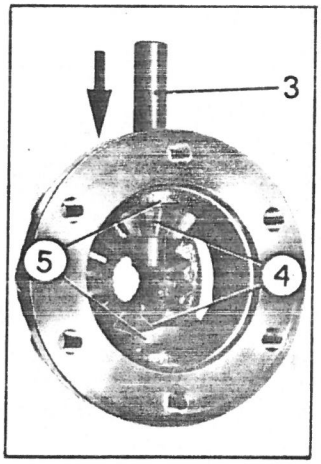

78-1102

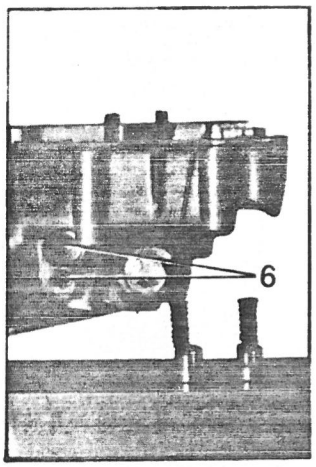

78-1099

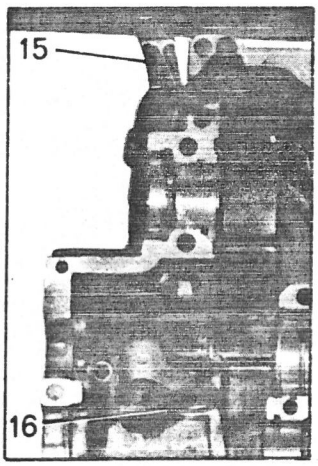

78-1139



78-1100

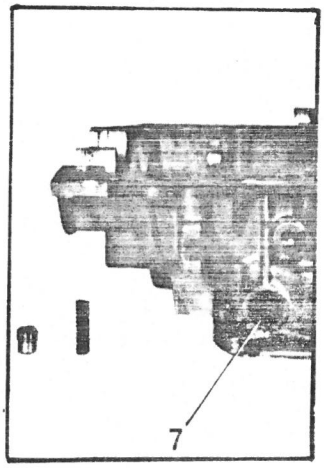

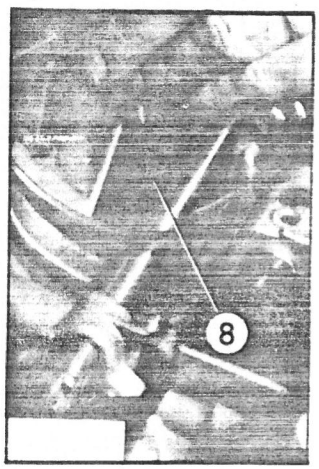

78-1132

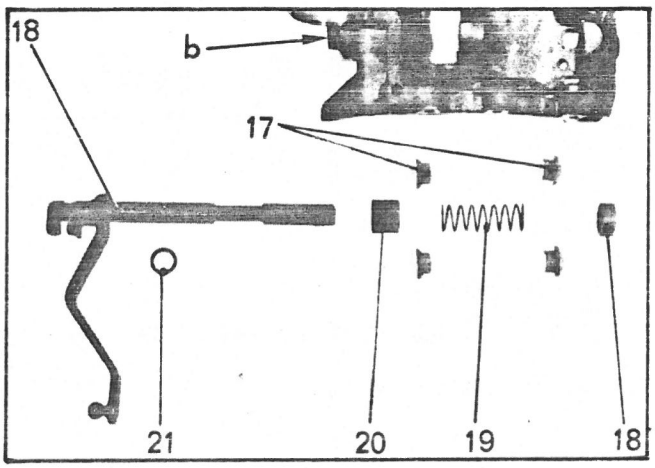

81-403



78-1125



78-1130

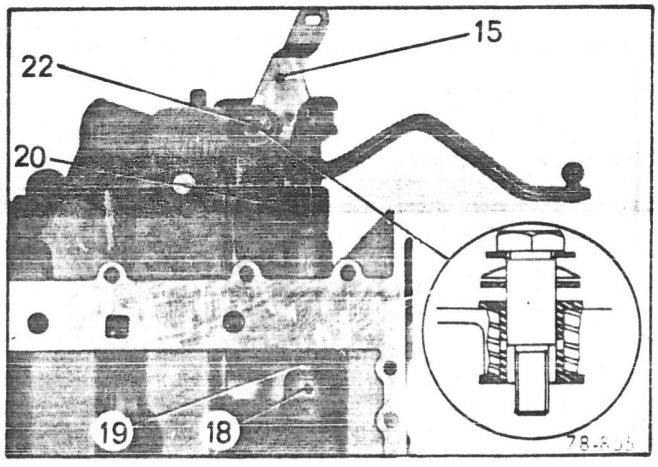

78-1122

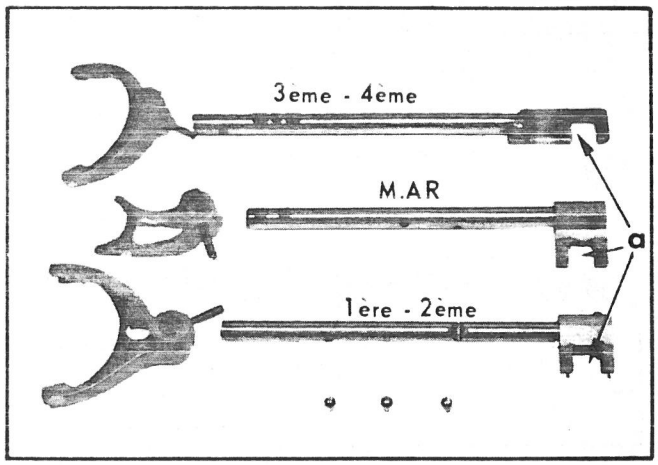

78-1099

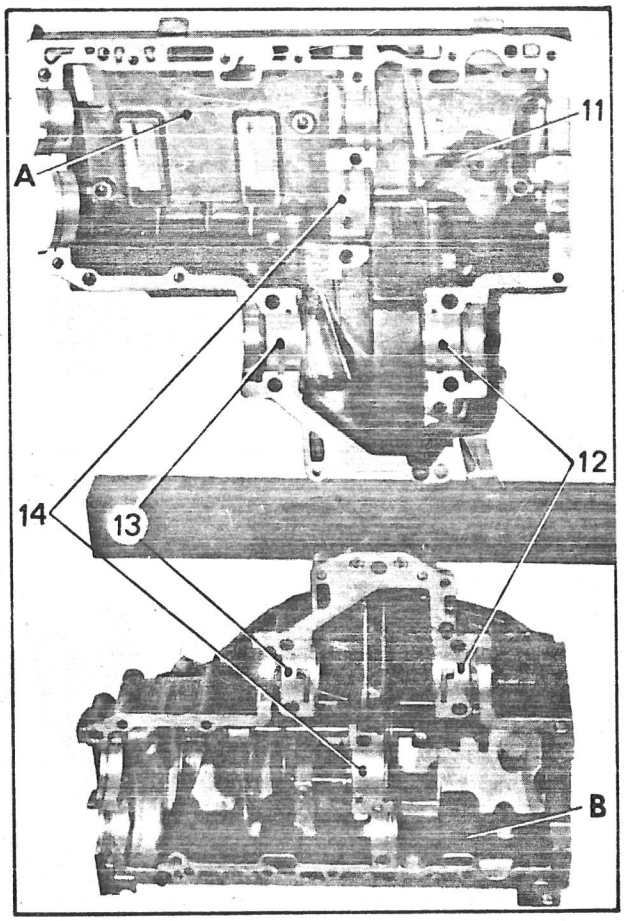

78-1134

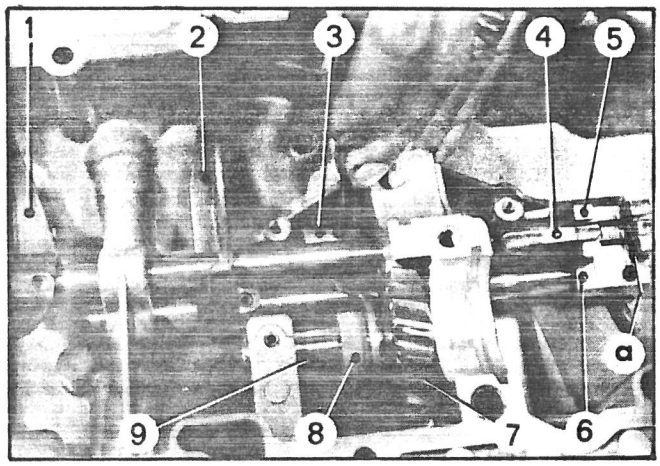

78-1131

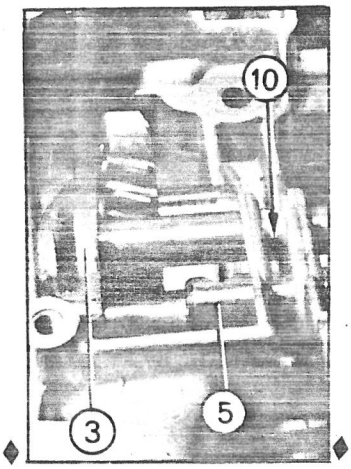

81-403

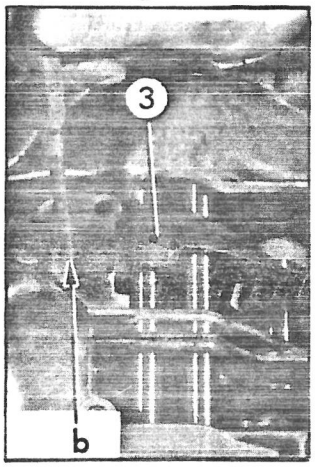

78-1146

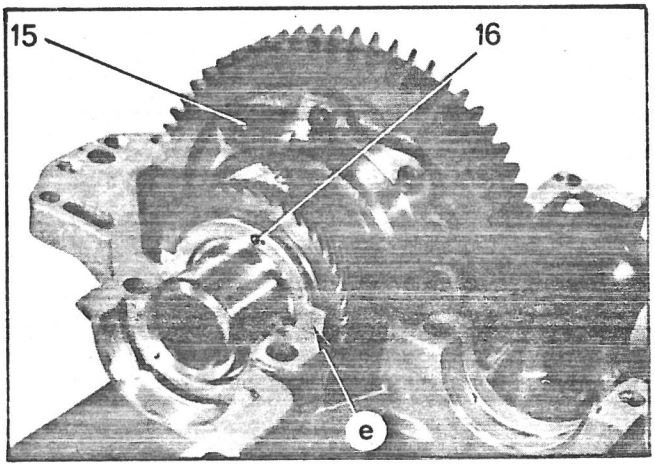

78-1101

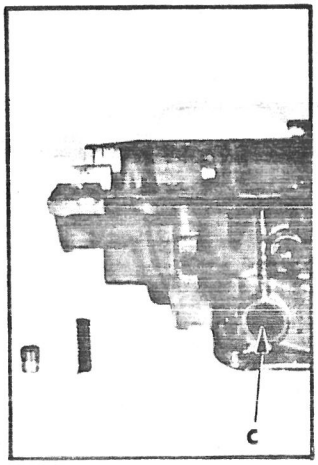

78-1102

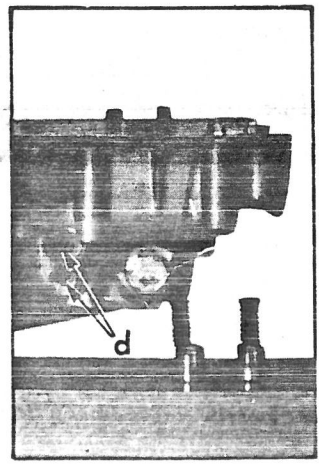

78-1142

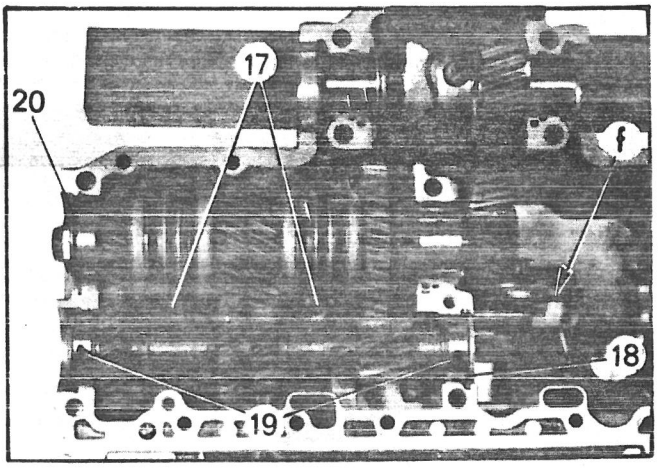

25. Fit the reverse gear idler assembly :

Fit :
- the idler pinion (7),
- the thrust bearing (8),
- the spindle (9) and pin
(new spring pin diameter 5 mm).

26. Fit selector forks and spindles :

a) Fit 3rd-4th gear selector fork spindle (4) *with slot « a » facing upwards* (insert 1st and 2nd gear selector fork (2).
Fit and re-pin the 3rd-4th gear selector fork (1).
(new spring pin diameter 5 mm).

♦ b) Fit the first-second gear selector fork spindle (6).
(insert the reverse gear selector fork (3)).
Fit and re-pin the first-second gear selector fork (2).
(Fit new spring diameter 5 mm).

5 speed box

Pin on taking support at (A).

4 speed box

Pin on taking support at (B).

c) Fit the interlock disc (10) by inserting it into the selector fork spindle slots.

d) Fit reverse gear selector fork spindle (5).

♦ **4 speed box**

Fit and pin the reverse selector fork (3).

♦ **5 speed box**

Fit and pin the relay lever to reverse 5th speed spindle (5) new spring pin diameter 5 mm)
Fit the first ball into the reverse fork and push the spindle back to locate it inside.
Fit the 2nd ball into the spindle.
Fit the plate and pin at « b ».
Fit the bolt and tighten to **1 m.daN (74 ft.lbs).**

27. Fit the 3 interlock balls at « c » and « d ».
Coat the interlock plug with sealing compound.
Torque : 1.,25 m.daN (11 ft lbs).

RE-ASSEMBLY.

28. Fit the half-bearings (12), (13) and (14) oiling the bearing surfaces.

Respect the respective locations of the re-used half- bearings *(marked on removal).*

29. Fit into the lower half-casing (D) :

a) The differential (15) each side fitted with the side bearing flanges (16) *copper face on differential side pegs « d » facing upwards.*

b) The secondary shaft, ensuring the correct engagement of the selector forks (17) and the clip (20) in its groove.

c) The primary shaft fitted with the outer bearing races (19) and thrust washer (18).

♦ **5 speed box**

Ensure the correct position of 5th and reverse synchroniser (lage shoulder outwards. See page 6 1st paragraph).

30. Fit the upper half-casing (C) :
- Coat the mating surface of upper half-casing with sealing compound.
- Assemble trhe case halves and ensure the correct engagement of the gear change selector arm (11) in the selector fork spindle notches « f ».

31. Fit bolts but do not tighten :
(1) 1 bolt M 8 x 1.25 x 55
(2) 1 bolt M 10 x 1.50 x 90
(3) 2 bolts M 7 x 1.00 x 30
(4) 3 bolts M 10 x 1.50 x 65
(5) 2 bolts M 8 x 1.25 x 75
(6) 2 bolts M 8 x 1.25 x 55
(7) 7 bolts M 7 x 1.00 x 75
(8) 1 bolt M 7 x 1.00 x 30

♦ Four speed box

32. Adjustment of primary shaft bearing pre-stress :
- Fit a new nut (9).
- Tighten bolts (1) and (5) to **1 m.daN (7 ft lbs).**
- Use tool [J]
- Engage gear.
- Rotate the gear assembly using nut (10)
- Tighten nut (9) to **2 m.daN (14 ft lbs).**
- Slacken nut (9)
- **Carry out final tightening to a torque of 0.75 to 1 m.daN (5 to 7 ft lbs).**

33. Tighten the casings in the following order :
a) First tightening :
- bolts (6) to **1 m.daN (7 ft lbs)**
- bolts (3), (7) and (8) to **1.25 m.daN (9 ft lbs),**
- bolts (2) and (4) to **2 m.daN (14 ft lbs)**

b) Final tightening :
- bolts (1), (5) and (6) to : **1.5 to 2 m.daN (11 to 14 ft lbs)**
- bolts (2) and (4) to : **4 to 5 m.daN (28 to 35 ft lbs)**

c) Lock nut (9) with tool [C]

34. Fit :
- the oil strainer (11)
  Torque : 1 m.daN (7 ft lbs),
- the bottom sump (13) with a *new* seal
  Torque : 1 m.daN (7 ft lbs)
- the drain plug fitted with a *new* seal (use adapter 8.0133-T B)
  Torque : 2.5 to 3 m.daN (17 to 21 ft lbs)
- protective cover (14)
  Torque : 1.75 m.daN (12 ft lbs)
- the speedometer bush (15) fitted with a *new* O-ring seal, use pinchers [H]
  (do not tighten locknut (16)),
- the *new* axle drive outlet seal (12)
  (use tool [L])
  Smear the gap between the double lips with grease.
- a *new* O-ring seal on the oil strain pipe outlet.

78-1143

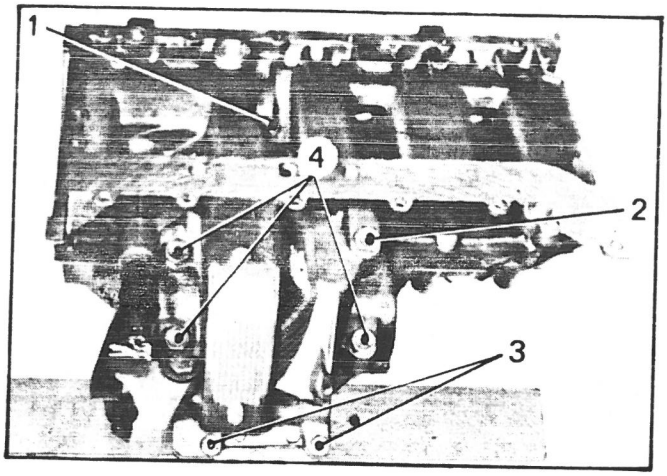

78-1153

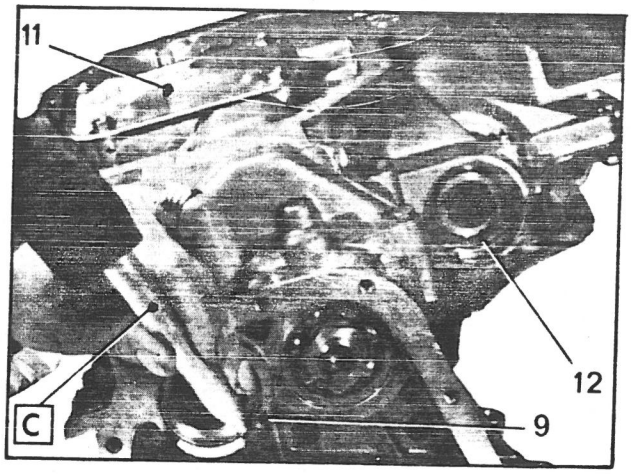

78-1155

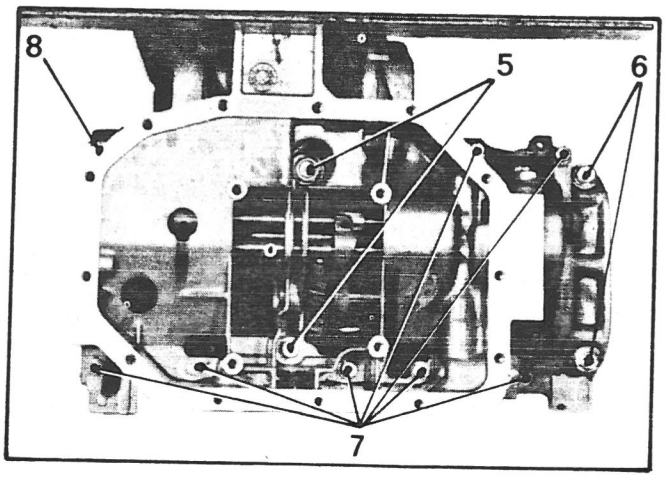

78-1150

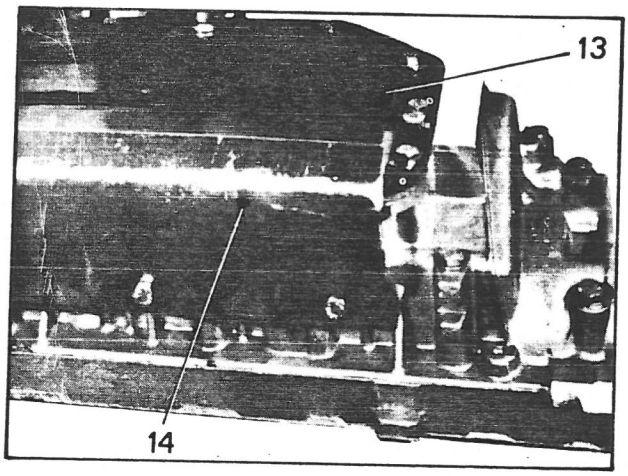

78-1086

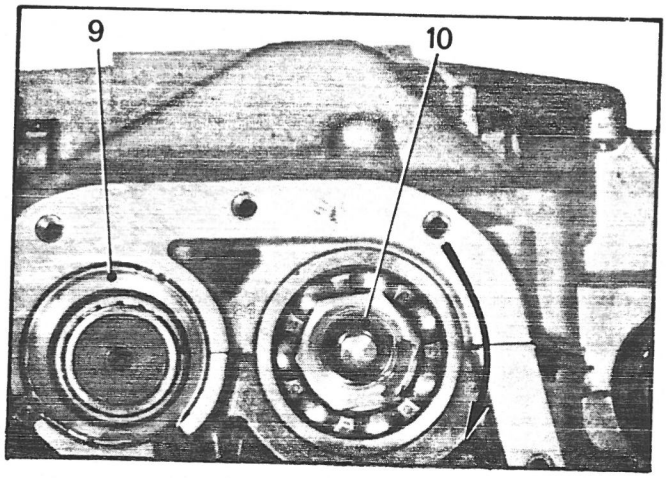

78-1151

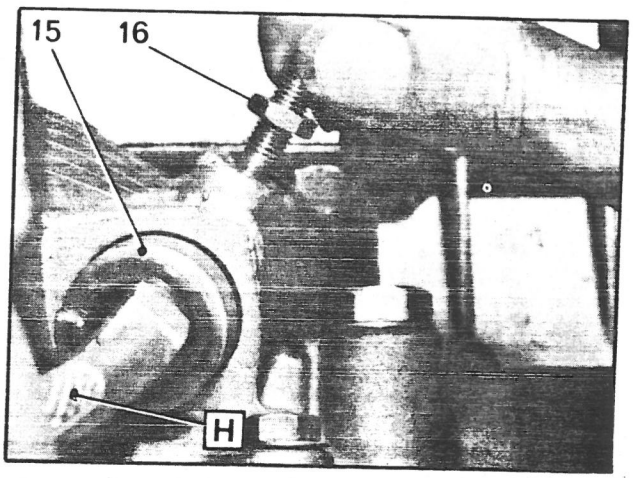

OPERATION
VD2. 434-3 a

RECONDITIONING A FRONT SUSPENSION UNIT

813-1 (III)

SPECIAL TOOLING

TOOLS SOLD

KIT 8.0908-T

A : Spring compressor

C : Shock absorber bracket

F : Front shock absorber rod top nut combination spanner (use 2 mm socket)

4045-T : Shock absorber rod clamp

TIGHTENING TORQUES

Recommended tightening torque :

Tightening point	Torque in m.daN
Shock absorber rod nut	4 to 5

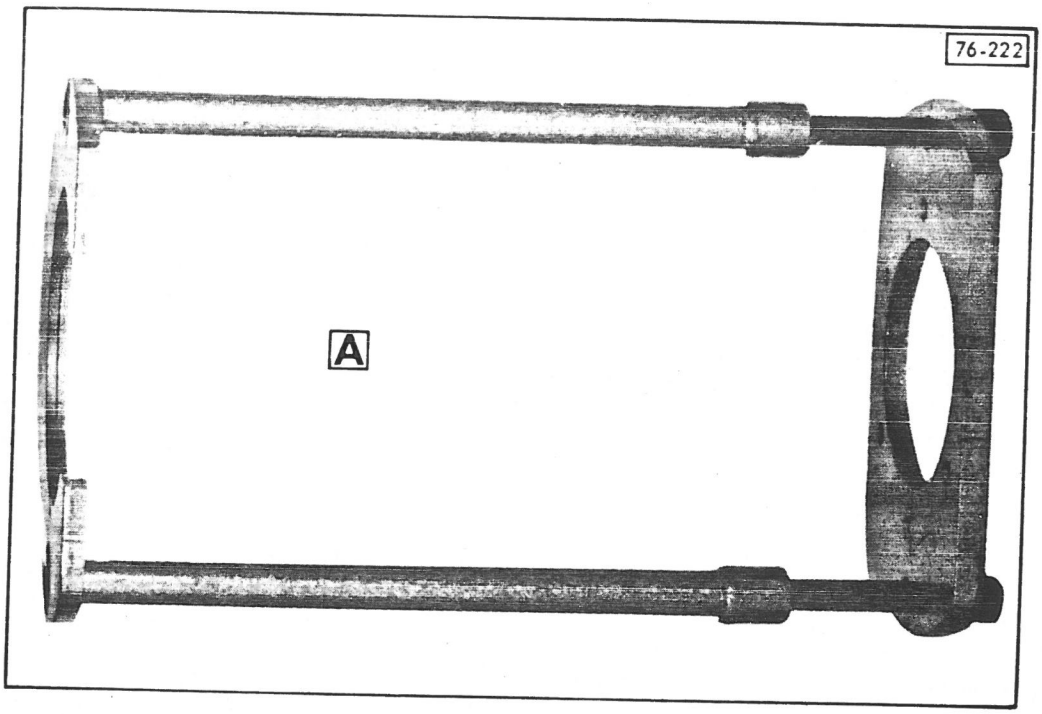
76-222
A

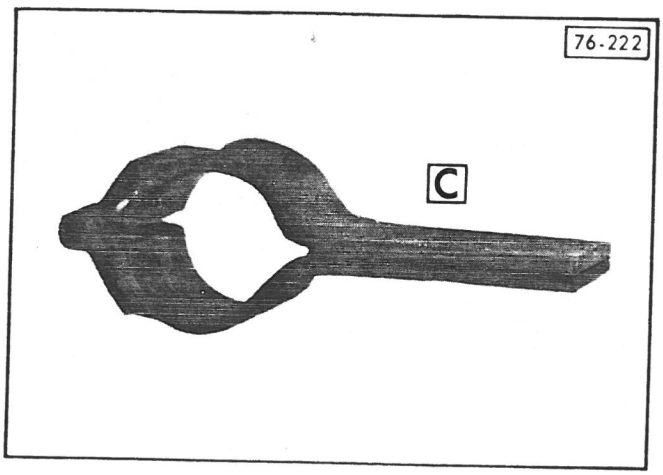
76-222
C

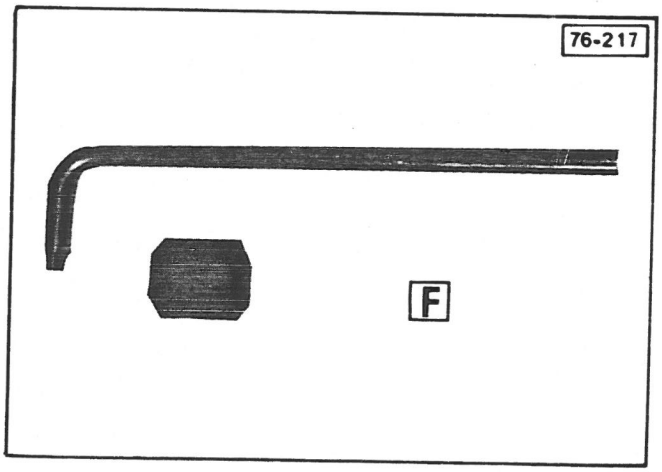
76-217
F

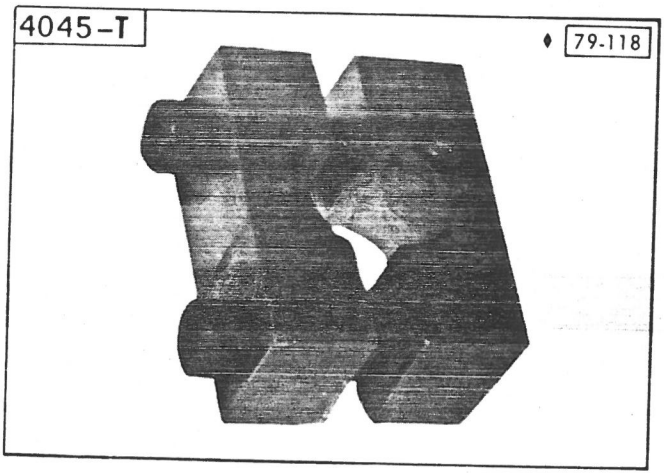
4045-T
♦ 79-118

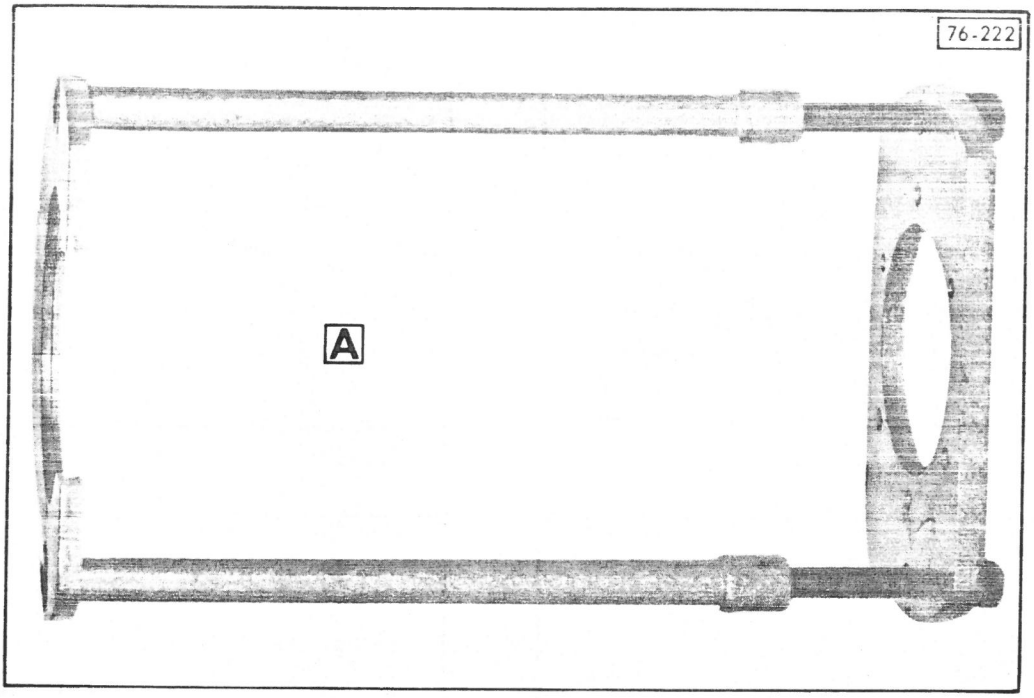
76-222
A

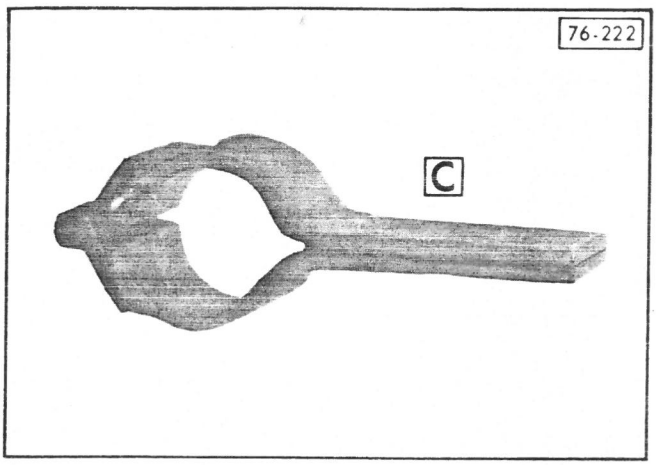
76-222
C

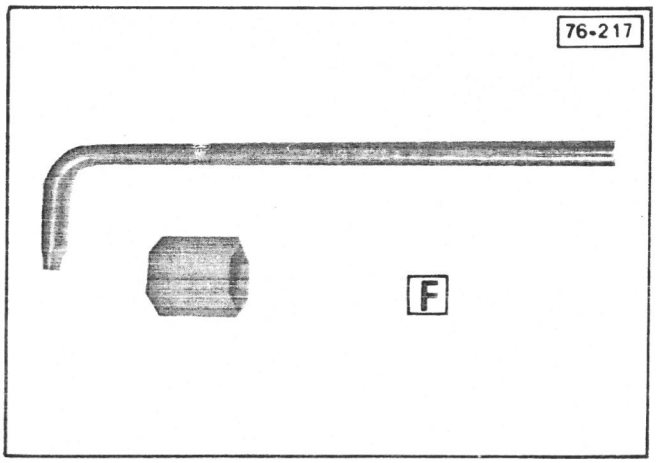
76-217
F

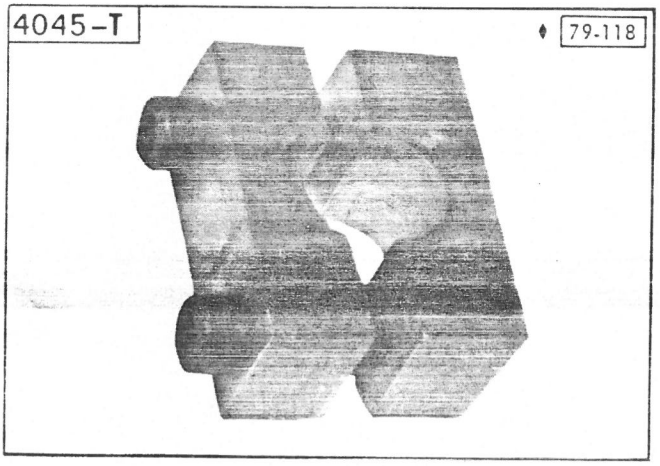
4045-T
79-118

78-556

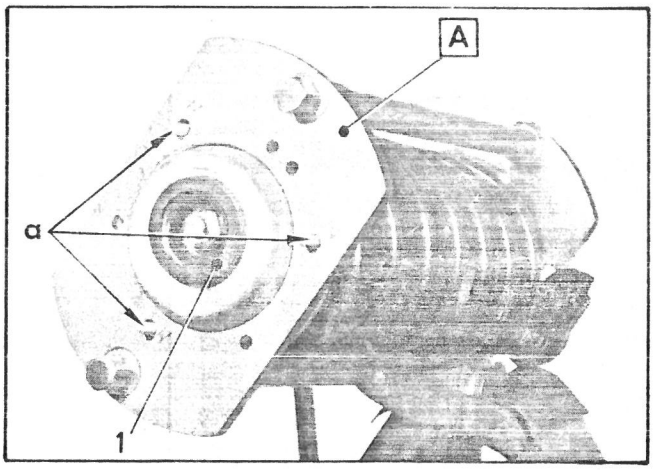

78-568

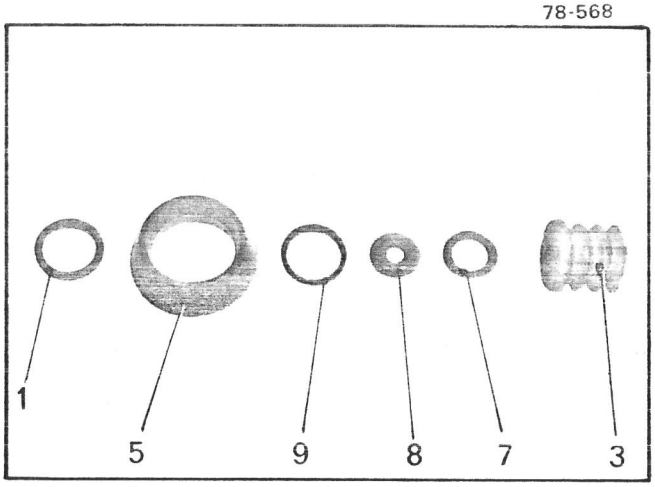

78-554

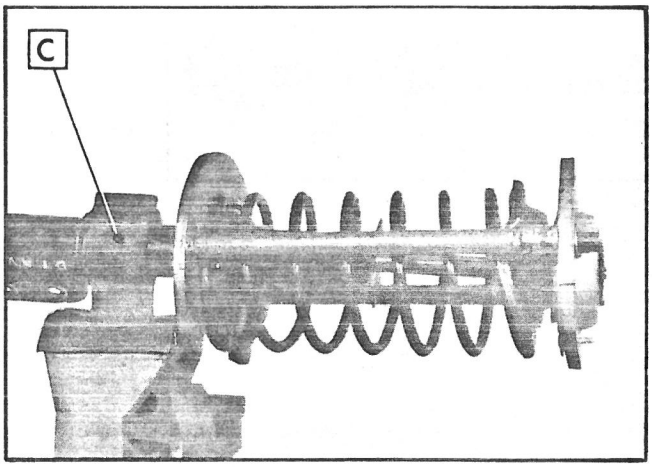

78-561

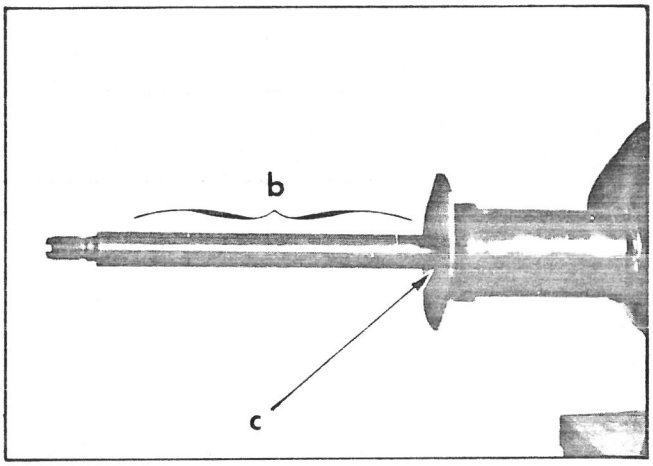

78-779

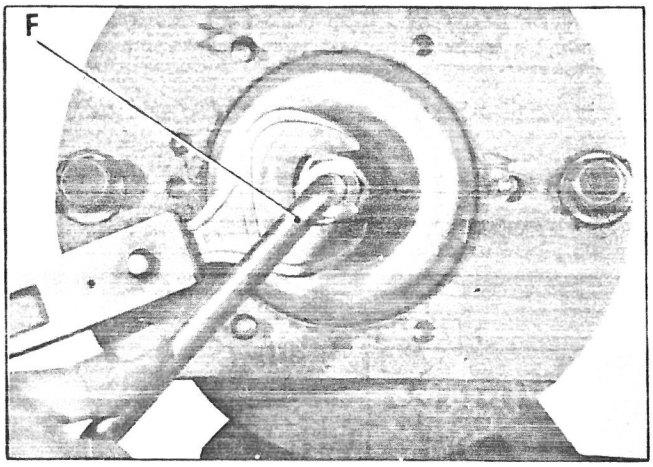

78-571

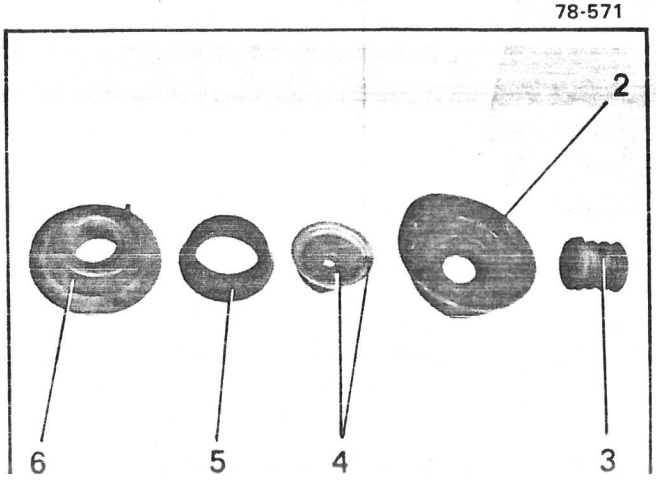

81-1125

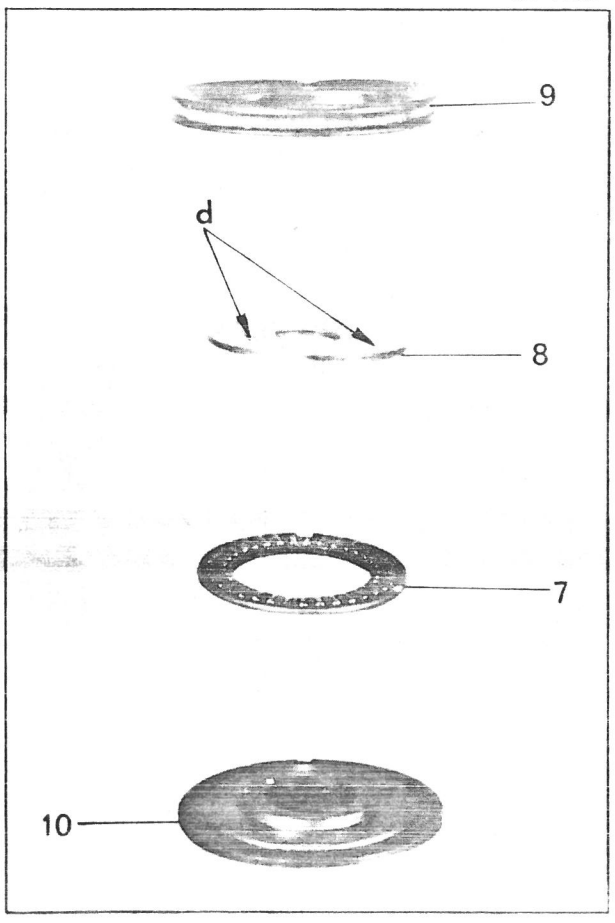

RECONDITIONING A FRONT SUSPENSION UNIT

REMOVAL

1. Fix the suspension unit in the vice (support [C]).

Fit spring compressor [A] : **the three upper support bolts should be engaged in the large holes « a » in the plate** *(only one position is possible).*

2. Fully compress the spring.

3. Remove the shock absorber rod nut, immobilize the rod with spanner [F] (use a 22 mm socket).

Never remove a shock absorber rod nut without spring compressor [A] (dangerous decompression of the spring).

4. Remove the cup and its rubber ring (1). Release the spring and remove spring compressor [A] .

5. Remove :
- top cup (6),
- flexible bush (5),
- cup and thrust needle bearing assembly (4),
- spring mounting upper cup (2), fitted with the neoprene protector *(12/79 ⟶)*,
- main stop (3),
- spring.

FITTING

♦ **6. Systematically renew :**
- **main stop (3),**
- **thrust needle bearing (7) and its washer (8),**
- **seal (9),**
- **flexible bush (5),**
- **rubber ring (1).**

7. If the shock absorber is to be reused, check that the rod is not bent or scratched (maximum permitted out of round 0.5 mm), on the contact surface « b ». Check the seal at « c ».

♦ **8. Prepare the thrust needle bearing assembly :** ⟶ *6/80 :*

Fit onto bush (1) the needle roller thrust (7) liberally greased (TOTAL MULTIS MS).

6/80 ⟶
The needle roller thrust (7) must be fitted correctly : the apparent needle side must be fitted upwards and the race (8) must have its two mark « d » facing upwards.

Fit the thrust (7) and the race (8) and the seal (9). Place the assembly into the cup (6).

9. Prepare the top assembly :

Fit :
- flexible bush (2),
- thrust needle bearing assembly (1).

10. Fitting the spring-cup assembly :

a) Fit the following components between the plates of compressor [A] :
- spring (5),
- ♦ - new upper cup (4) (sold by the Replacement Parts Department),
- assembled shock absorber upper plate (3)

(the end of the coil in contact with collar « a »).

b) Fit the shock absorber in the vice (support [C])

c) Offer up the assembly to the shock absorber when engaging compressor [A] plate behind lower cup (6) of the shock absorber *(the end of the coil should be in contact with collar « b »).*

d) Fit assembly clamp [4045-T] but do not tighten. Fit main stop (7).
With the shock absorber rod at its maximum travel length, moderately tighten assembly clamp bolts [4045-T]

e) Compress the assembly by tightening bolts (8) on tool [A] and insert the shock absorber rod into the upper cup and endplate assembly.

Compress tool [A] (⟶) in order to line up the shock absorber rod with the cup holes.

f) Check that the shock absorber rod is correctly positioned at « c ».

11. Fit :
- cup (9) and its rubber ring,
- nut, holding the shock absorber rod in position (spanner [F] , use a 22 mm socket), **torque :4 to 5 m.daN.**

12. Fit main stop (7) into upper cup (4). Remove compressor [A] and clamp 4045-T

78-570

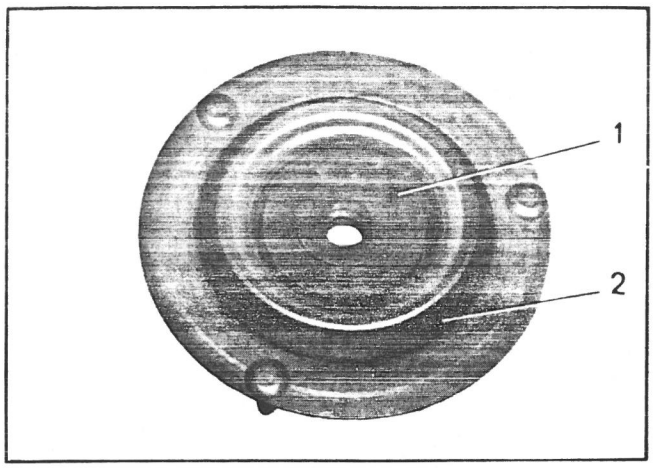

78-560

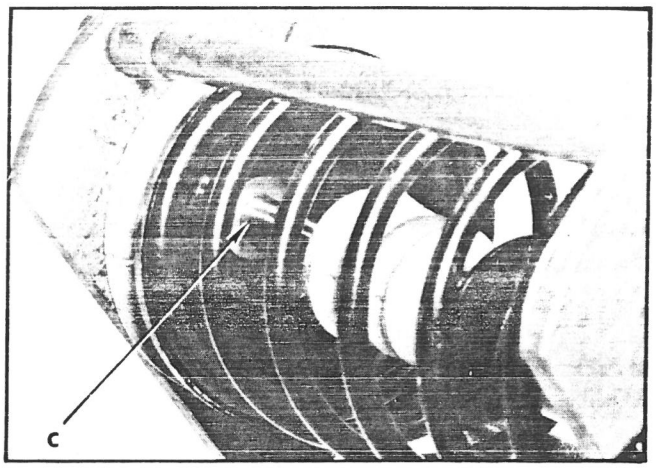

78-552

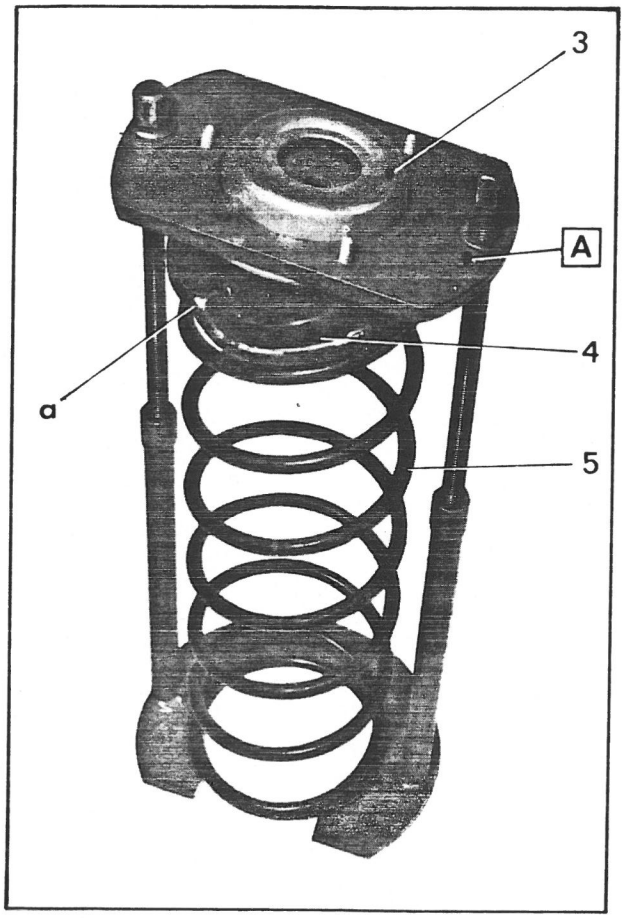

78-556

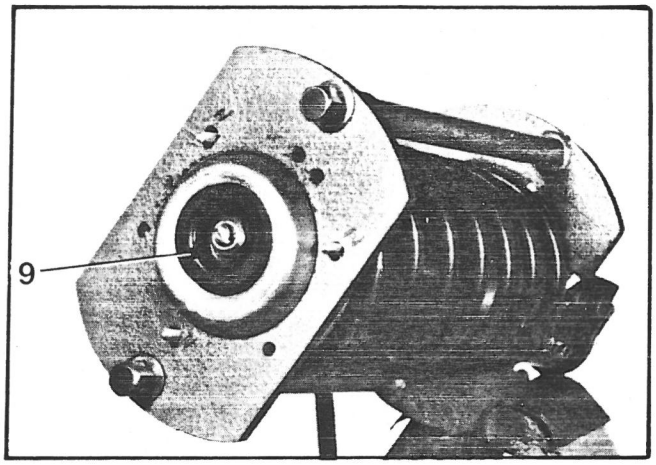

V. 43-3

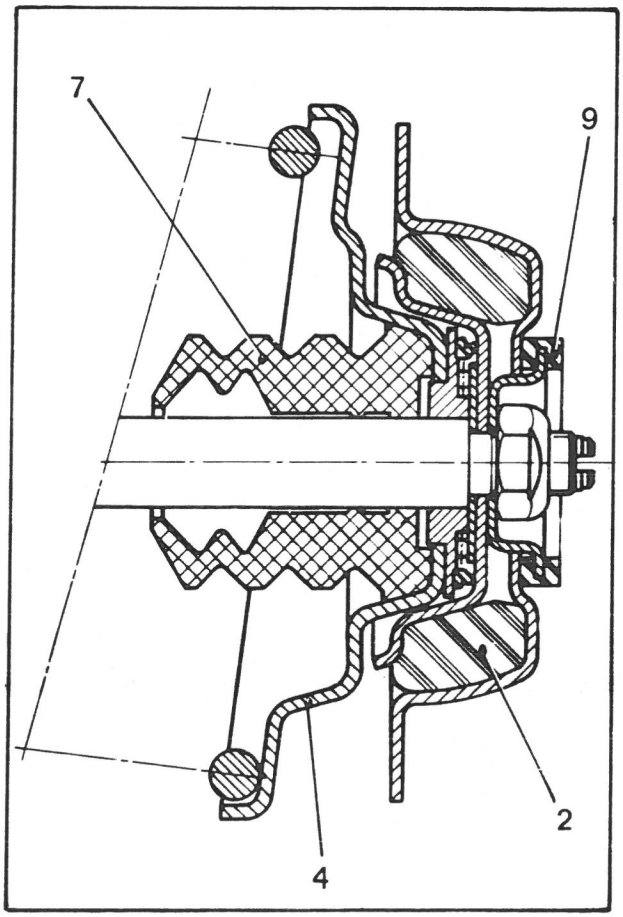

79-113

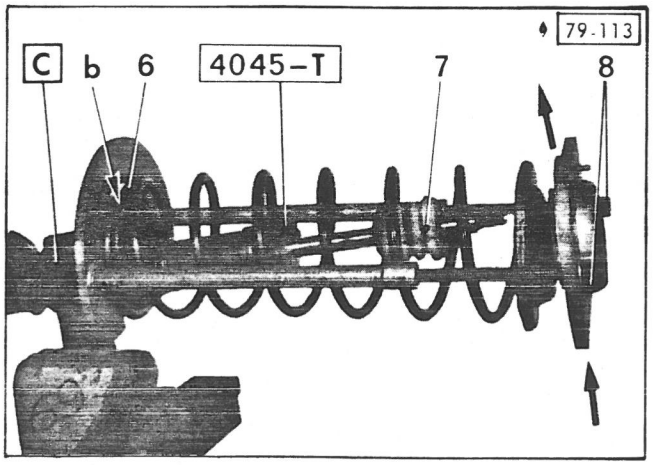

OPERATION
VD2. 434-3 b

RECONDITIONING OF A REAR SUSPENSION UNIT

SPECIAL TOOLING

TOOLS SOLD

KIT 8. 0908-T

A : Spring compressor consisting of :

A1 : Press

A2 : Intermediate plate

C : Shock absorber support consisting of :

C1 : Bracket

C2 : Sleeve

B : Shock absorber rod clamp

J : Rear shock absorber rod locking spanner

TIGHTENING TORQUES

Recommended tightening torques :

Tightening point	Torque in m.daN
Shock absorber rod Nylstop nut	1.5 to 1.8

76-222

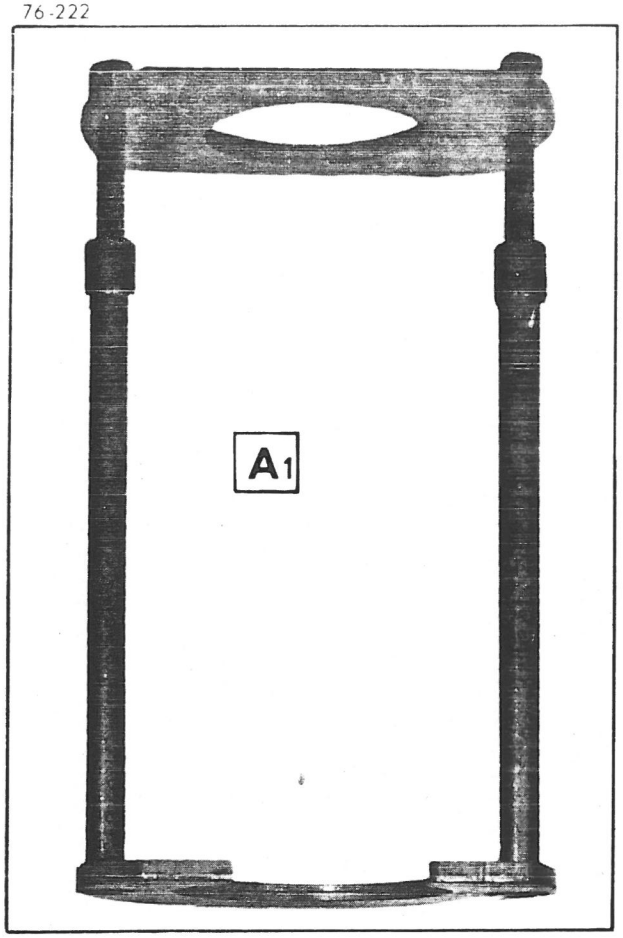

76-222

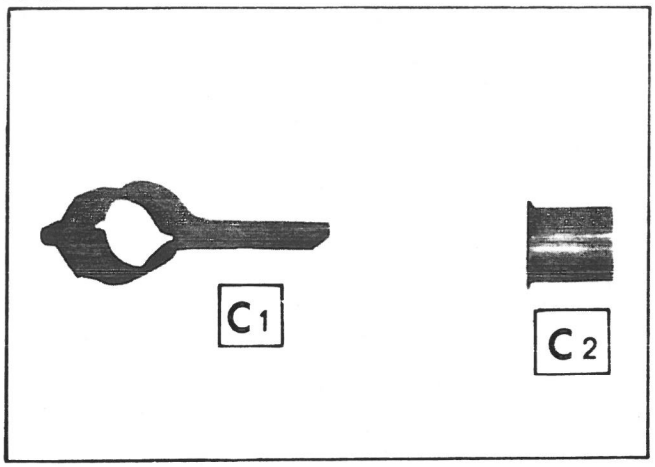

76-241

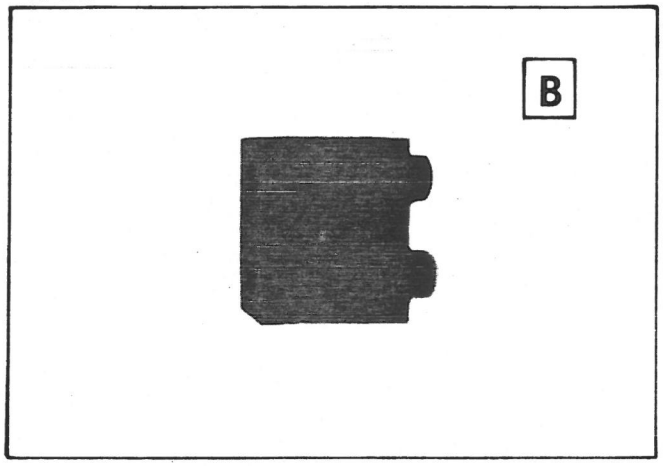

76-241

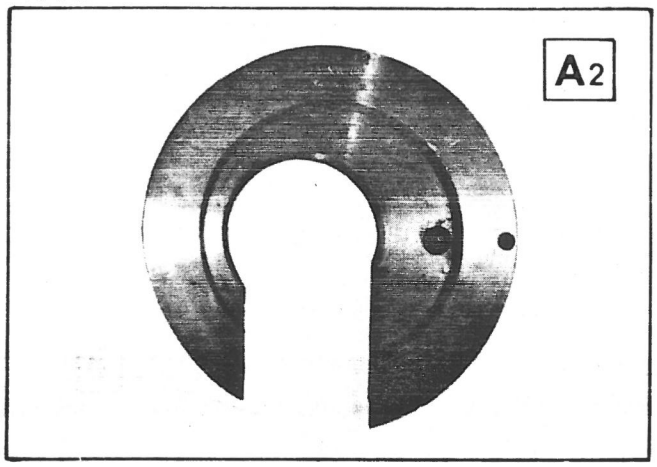

76-241

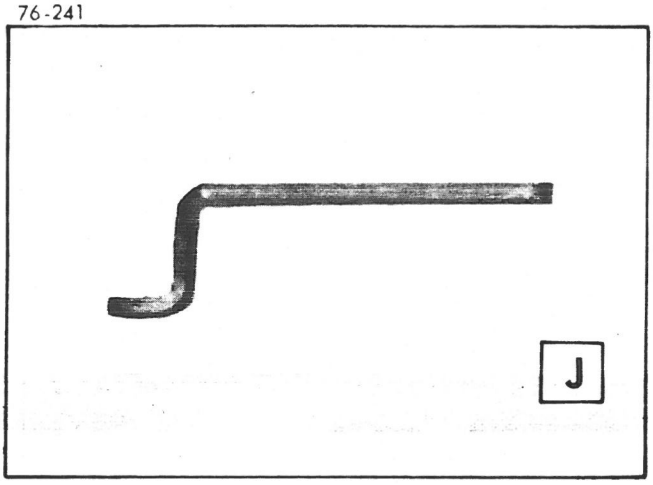

76-219

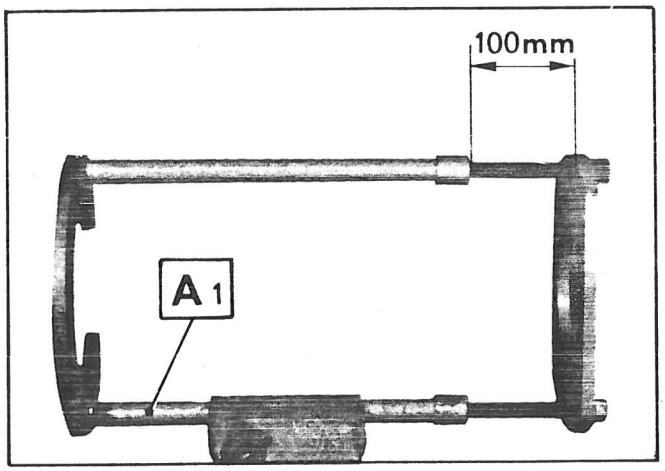

77-547

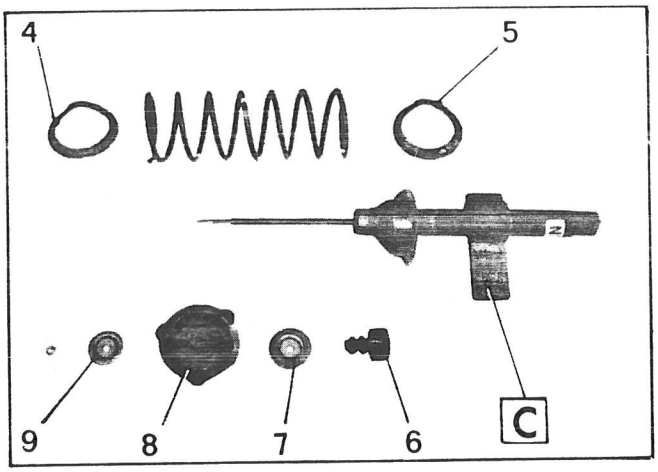

78-562

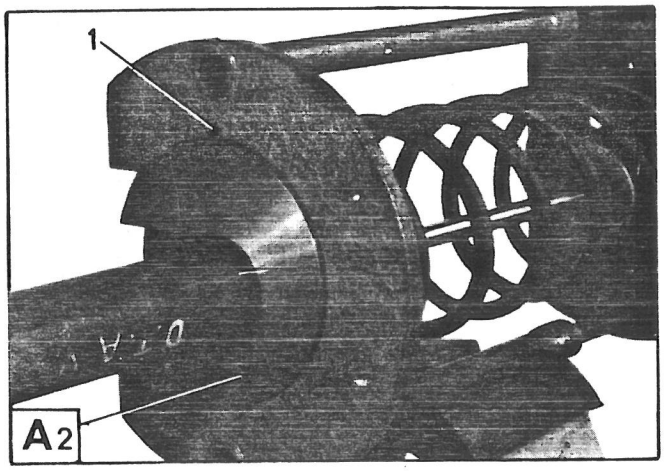

77-548

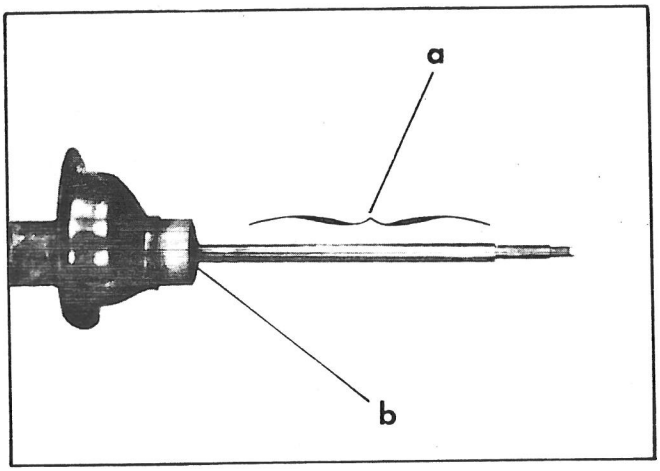

77-545

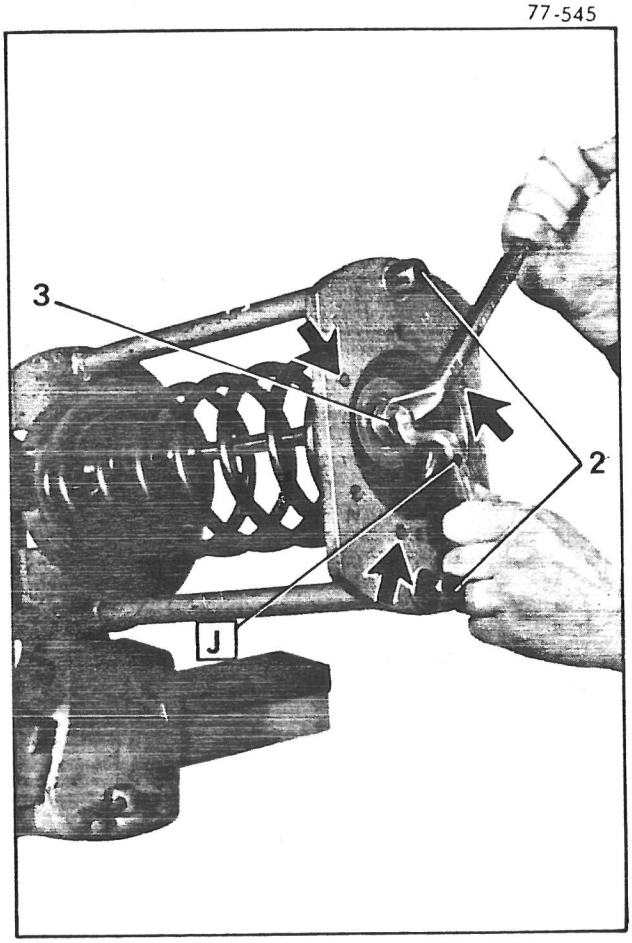

77-547

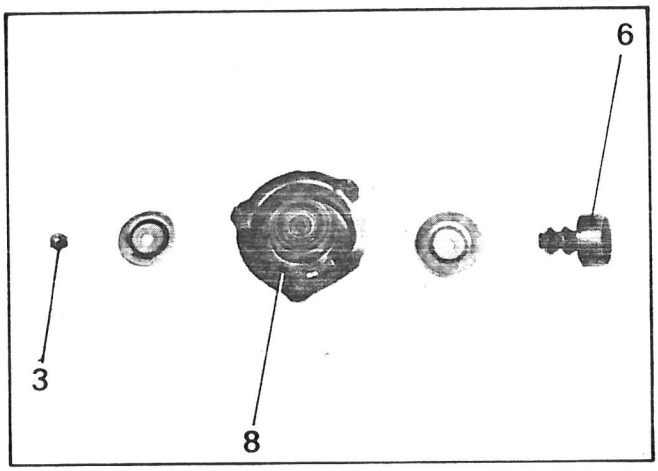

77-549

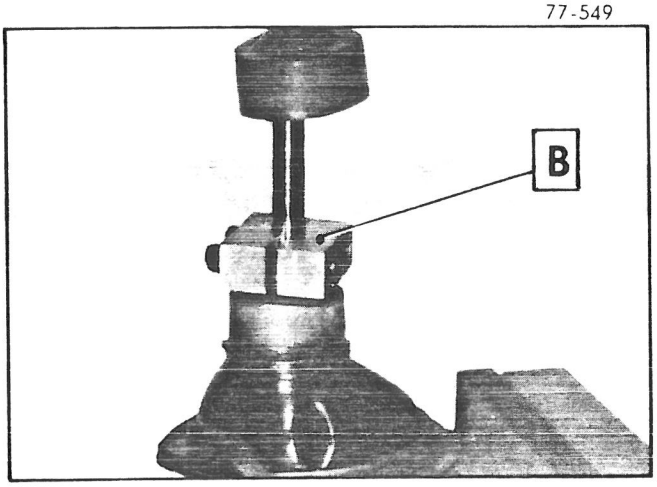

RECONDITIONING A REAR SUSPENSION UNIT

REMOVAL

1. Fix the spring compressor [A1] in the vice and unscrew the rods approximately 100 mm.

2. Center the intermediate plate [A2] as best as possible on the lower cup of the shock absorber and locate the assembly between the plates of tool [A1], with pin (1) in the corresponding slot.
Three upper support bolts should be engaged in the small holes (➡) in the plate *(only one position is possible).*

3. Fit the shock absorber support system into the vice (assembly [C] support and sleeve).

4. Tighten the rods home (2).

Never remove the shock absorber rod nut (3) without using a compressor (dangerous decompression of the spring).

5. Hold the shock absorber rod using locking spanner [J] and remove the nut (3).

6. Remove :
- the cup (9),

Decompress the spring and remove :
- the upper support (8) and its rubber cup (4),
- cup (7),
- the spring,
- the rubber cup (5),
- the bellows (6).

FITTING

Only use clean and faultness parts.

7. Extend the shock absorber rod to the maximum.
Visually check :
- the shaft nut « b »,
- the shock absorber rod

There should be no scratches or dents on friction surface « a ».
There should be no buckling and the thread should be intact.

8. Systematically renew :
- **the protective bellows (6),**
- **the upper support (8),**
- **the spring support rubber cups,**
- **the shock absorber rod nut (3).**

9. Lock the shock absorber rod in the maximum extension position using clamp [B]

10. Fit the following to the shock absorber rod :
- the protective rubber bellows,
- the cup (2) (hollow side facing bellows),
- the rubber cup (7),
- the spring, with the end of the coil against the shouldering provided for this purpose.

The two rear suspension units should be fitted with springs of the same calibration (same color reference).

Under a load of 243 kg :
- Height under 220 mm : grey and green mark,
- Height over 220 mm : grey and yellow mark.

11. Fit the upper support (3) fitted with its rubber cup, with the end of the coil against the shouldering provided for this purpose.

12. Fit the compression tool as described for disassembly and tighten bolts (6) and check that the shock absorber rod is correctly located in the upper support (3).

13. Fit :
- the upper cup (4),(hollow side outwards)
- the Nylstop nut (5)and tighten to : **1.5 to 1.8 m.daN** while holding the shock absorber rod in position with spanner [J]

14. Remove the tooling.
Fit the rubber bellows (1).

77-547

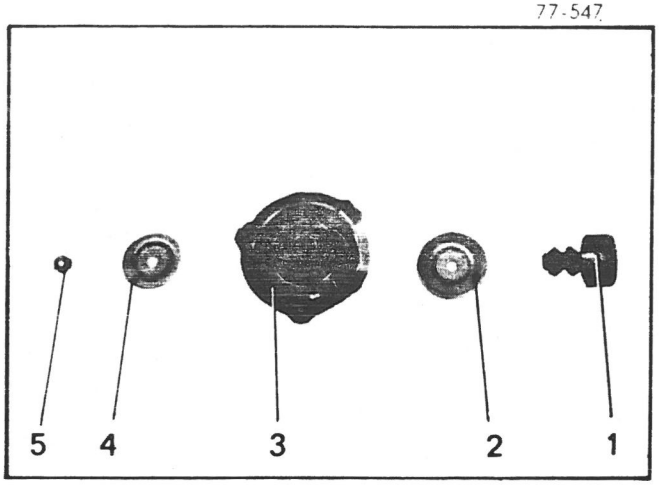

77-546

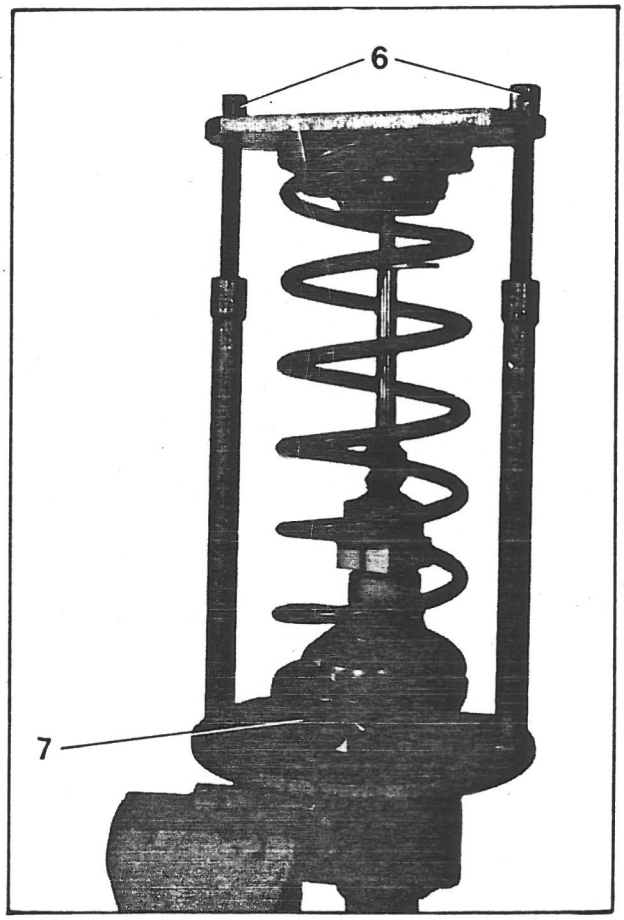

77-549

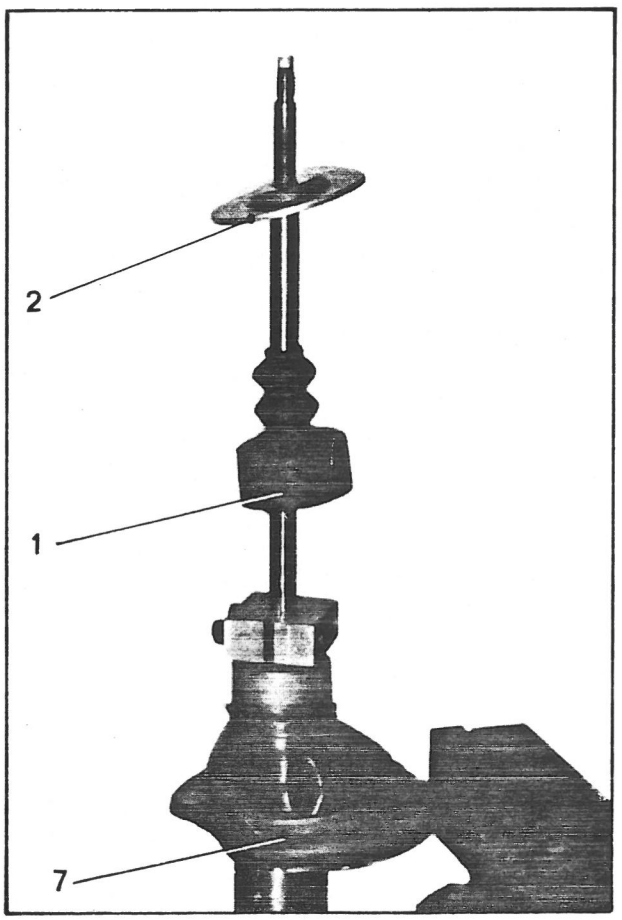

LIST OF OPERATIONS IN SECTION IV

Operation number	DESCRIPTION
	ELECTRICAL SYSTEM
	VD 1
VD. 510-000	Arrangement of the electrical installation (General outlines)
VD1. 510-00 b	Arrangement of the electrical installation
VD1. 510-00 c	Arrangement of the electrical installation *(2/1980 ⟶)*
VD1. 532-0	Characteristics and checks of the electrical components
	VD 2
VD. 510-000	Arrangement of the electrical installation (General outlines)
VD2. 510-00 a	Arrangement of the electrical installation (VISA SUPER ⟶ *7/1980)*
VD2. 510-00 b	Arrangement of the electrical installation (VISA SUPER "E" *7/1980* ⟶ *3/1981)*
VD2. 510-00 c	Arrangement of the electrical installation (VISA SUPER "X" *10/1980* ⟶ *3/1981)*
♦ VD2. 510-00 d	Arrangement of the electrical installation (VISA SUPER "E" *3/1981* ⟶ *7/1981)*
♦ VD2. 510-00 e	Arrangement of the electrical installation (VISA II SUPER "X" *3/1981* ⟶ *7/1981)*
♦ VD2. 510-00 f	Arrangement of the electrical installation (VISA II SUPER "E" and VISA II "L" *7/1981* ⟶ *)*
♦ VD2. 510-00 g	Arrangement of the electrical installation (VISA II SUPER "X" *7/1981* ⟶ *)*
VD2. 532-0	Characteristics and checks of the electrical components
VD. 961-0	Checking and repairing a rear window heating element

LIST OF VD2, OPERATIONS IN SECTION IV

Operation number	DESCRIPTION
	ELECTRICAL SYSTEM
VD. 510-000	Arrangement of the electrical installation (General outlines)
VD2. 510-00 a	Arrangement of the electrical installation (VISA SUPER ⟶ *7/1980*)
VD2. 510-00 b	Arrangement of the electrical installation (VISA SUPER "E" *7/1980* ⟶ *3/1981*)
VD2. 510-00 c	Arrangement of the electrical installation (VISA SUPER "X" *10/1980* ⟶ *3/1981*)
◆ VD2. 510-00 d	Arrangement of the electrical installation (VISA SUPER "E" *3/1981* ⟶ *7/1981*)
◆ VD2. 510-00 e	Arrangement of the electrical installation (VISA II SUPER "X" *3/1981* ⟶ *7/1981*)
◆ VD2. 510-00 f	Arrangement of the electrical installation (VISA II SUPER "E" and VISA II "L" *7/1981* ⟶)
◆ VD2. 510-00 g	Arrangement of the electrical installation (VISA II SUPER "X" *7/1981* ⟶)
VD2. 532-0	Characteristics and checks of the electrical components
VD. 961-0	Checking and repairing a rear window heating element

OPERATION
VD. 510-000

ARRANGEMENT OF THE ELECTRICAL INSTALLATION
(General outlines)

PRESENTATION

All the operations describing the arrangement of the electrical installation comprise the following tables and diagrams :

- bulb table,
- fuse table,
- wiring diagram,
- circuit diagram,
- list of components,
- description of wiring harnesses,
- list of earthing points.

READING THE DIAGRAMS

The wiring diagram indicates the layout of the leads and the approximate location of the components.

The circuit diagram presents the various circuits in a functional way, which can be very helpful when trying to find out the cause of a malfunction in the electrical system. When a unit is connected to several circuits, its various sections are shown in "exploded form" on different vertical grid lines.

Method of identification :

The method of identification is the same for both wiring and circuit diagrams.

The numbers printed in large types identify the components.

They appear in numerical sequence on the wiring diagram and on the list of components (L.H. column).

The list of components is the link between both diagrams.

The numbers in the R.H. column, which also appear in the lower part of the circuit diagram, indicate the position of a given component on this diagram.

The wiring harnesses are identified by large block letters.

Usually, the main harness (front harness) is not identified on the circuit diagram.

The leads are identified by colour marks on the lead itself or on the insulating sleeve. The key to colour marks is indicated on page 6, Operation VD1. 510-00 b.

When only a colour is indicated, it is the colour of the sleeve. For example : Mv = Mauve sleeve.

When the colour mark is preceded by letter F., the colour mentioned is that of the lead. For example : F Ve = green lead.

If necessary, both indications can be given at the same time : F.Ve Mv = green lead with mauve sleeve.

The leads carrying no identification mark cannot be mistaken.

The marks identifying the "exploded" harness connecting blocks on the circuit diagram indicate the colour of the considered connection block and the channel No. For example : Na 4 : *colour of connection block : Natural; channel No. : 4.*

Two harnesses can sometimes be joined by two connection blocks *of the same colour,* but carrying a different number of channels. In that case, to avoid all possible mistakes, *the smaller connection block* is identified by indicating the total number of channels, in addition to other information concerning the colour of the connector and the channel number.

For example : Na 1 / 2 V *Colour of connection block : Natural; channel No. : 1 Total number of channels in the connection block : 2.*

KEY TO DIAGRAM SYMBOLS TT. 51-3 a

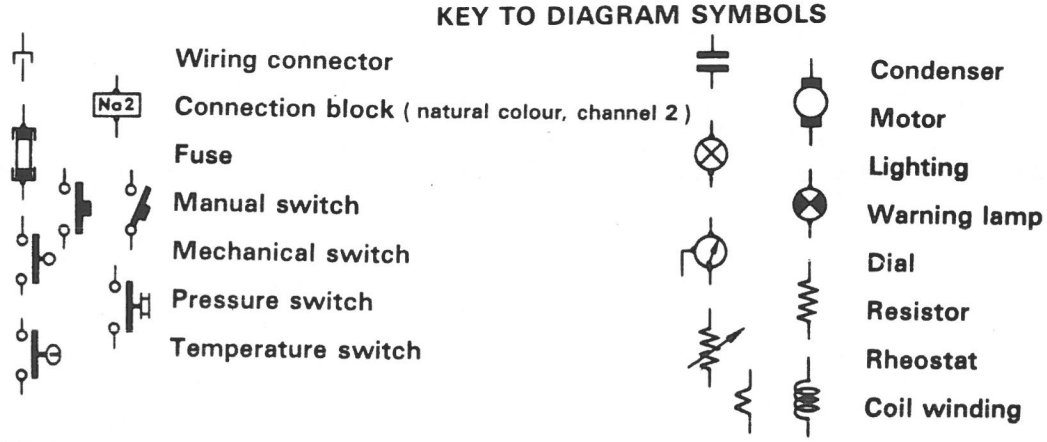

OPERATION
VD2. 510-00 b

VISA SUPER E

7/1980 ⟶ 3/1981

ARRANGEMENT OF THE ELECTRICAL INSTALLATION

BULB TABLE

Use	Number of bulbs	Base	Voltage	Power	International type
Headlamp main and dipped beam	2	P.43 t.38	12 V	60/55 W	H 4
Direction indicators Stoplamps Reversing lamps Rear fog lamps	4 2 2 2	BA. 15 s/19	12 V	21 W	P. 25/1
Sidelamps Direction indicator side repeaters	2 2	BA. 9 s	12 V	4 W	T. 8/4
Tail lamps	2	BA. 15 s/19	12 V	5 W	R. 19/5
Interior lamp	1	Festoon	12 V	5 W	C. 11
Choke warning lamp Dashboard warning lamps Dashboard illumination Econoscope warning lamp	1 4 1 2	Wedge base dia. 5	12 V	1,2 W	
Warning lamps on satellite cylinder	4			1 W	
Warning lamps combined with test buttons *(unremovable bulb but removable unit)*	5	« Luciole »	12 V	1 W	

FUSE TABLE

Current supply	Fuses		Equipment protected
	Colour	Amperage	
Positive terminal of battery "+" (with ignition key in "ignition on" position)	Yellow lead	16 A	Electric cooling fan Windscreen wiper motor Windscreen washer pump Horn Choke warning
	White lead	10 A	Idle cut-off Reversing lamps Regulator feed on alternator
Positive terminal of battery « + » (via relay)	Mauve lead	16 A	Fuel gauge receiver Rear screen washer/wiper motor Warning lamps for brake fluid level, for econoscope Heated rear window and warning lamp Air blower and warning lamp Warning lamps for battery charge, oil pressure and brake pad wear and water temperature (on dashboard) Direction indicators + warning lamp
Positive terminal of battery « + »	Blue lead	16 A	Stoplamps Hazard warning lamps + warning lamp on dashboard Interior lamp Radio *(optional)* and cigar lighter Clock
Satellite cylinder	Green lead	10 A	Side and tail lamps Dashboard lighting
	Red lead	10 A	Rear fog lamps + warning lamp

OPERATION
VD2. 510-00 c

VISA SUPER X

10/1980 ⟶ 3/1981

ARRANGEMENT OF THE ELECTRICAL INSTALLATION

BULB TABLE

Use	Number of bulbs	Base	Voltage	Power	International type
Headlamp main and dipped beam	2	P.43 T.38	12 V	60/55 W	H 4
Direction indicators Stoplamps Reversing lamps Rear fog lamps	4 2 2 2	BA. 15 s/19	12 V	21 W	P. 25/1
Sidelamps Direction indicator side repeaters	2	BA. 9 s	12 V	4 W	T. 8/4
Tail lamps	2	BA. 15 s/19	12 V	5 W	R. 19/5
Interior lamp	1	Festoon	12 V	5 W	C. 11
Choke warning lamp Dashboard warning lamp Dashboard illumination	1 4 1	Wedge base dia. 5	12 V	1.2 W	
Warning lamps on satellite cylinder	4			1 W	
Warning lamps combined with test buttons *(unremovable bulb but removable unit)*	5	« Luciole »	12 V	1 W	

FUSE TABLE

Current supply	Fuses		Equipment protected
	Colour	Amperage	
Positive terminal of battery "+" (with ignition key in "ignition on" position)	Yellow	16 A	Electric cooling fan Windscreen wiper motor Windscreen washer pump Horn Brake fluid level warning lamp
	White lead	10 A	Idle cut-off Reversing lamps Regulator feed on alternator
Positive terminal of battery « + »	Mauve lead	16 A	Rear screen wiper and washer motor Warning lamps for oil pressure, battery charge and front brake pad wear and water temperature Fuel gauge receiver Brake fluid warning lamp Heated rear window + waning lamp + blower motor Clock display supply Direction indicators and warning lamp
	Blue lead	16 A	Clock (feed) Stop lights - Radio (option) Interior lamp Hazard warning lamps Cigar lighter
Satellite cylinder	Green lead	10 A	Side and tail lamps Dashboard lighting Lighting attenuation for clock display segments
	Red lead	10 A	Rear fog lamps

OPERATION
VD2. 510-00 d

VISA II SUPER E

3/1981 ⟶ 7/1981

ARRANGEMENT OF THE ELECTRICAL INSTALLATION

BULB TABLE

Use	Number of bulbs	Base	Voltage	Power	International type
Headlamp main and dipped beam	2	P.43 t.38	12 V	60/55 W	H 4
Direction indicators Stoplamps Reversing lamps Rear fog lamps	4 2 2 2	BA. 15 s/19	12 V	21 W	P. 25/1
Sidelamps Direction indicator side-repeaters	2 2	BA. 9 s	12 V	4 W	T. 8/4
Tail lamps	2	BA. 15 s/19	12 V	5 W	R. 19/5
Interior lamp	1	Festoon	12 V	5 W	C. 11
Choke warning lamp Dashboard warning lamps Dashboard illumination Econoscope warning lamps	1 4 1 2	Wedge base dia. 5	12 V	1.2 W	
Warning lamps on satellite cylinder	4			1 W	
Warning lamps combined with test buttons *(unremovable bulb but removable unit)*	5	« Luciole »	12 V	1 W	

FUSE TABLE

Current supply	Fuses		Equipment protected
	Colour	Amperage	
Positive terminal of battery "+" (with ignition key in "ignition on" position)	Yellow lead	16 A	Electric cooling fan Windscreen wiper motor Windscreen washer motor Horn Choke warning
	White lead	10 A	Reversing lamps Regulator on alternator
Positive terminal of battery « + »	Mauve lead	16 A	Fuel gauge receiver Rear screen washer/wiper motor Econoscope warning lamps Heated rear window and warning lamp Brake fluid level warning lamp Air blower and warning lamp Warning lamps for battery charge, oil pressure and brake pad wear and water temperature Direction indicators + warning lamps
	Blue lead	16 A	Stoplamps Hazard warning lamp Interior lamp Radio *(optional)* and cigar lighter Clock
Satellite cylinder	Green lead	10 A	Side and tail lamps + warning lamp Dashboard lighting
	Red lead	10 A	Rear fog lamps + warning lamp

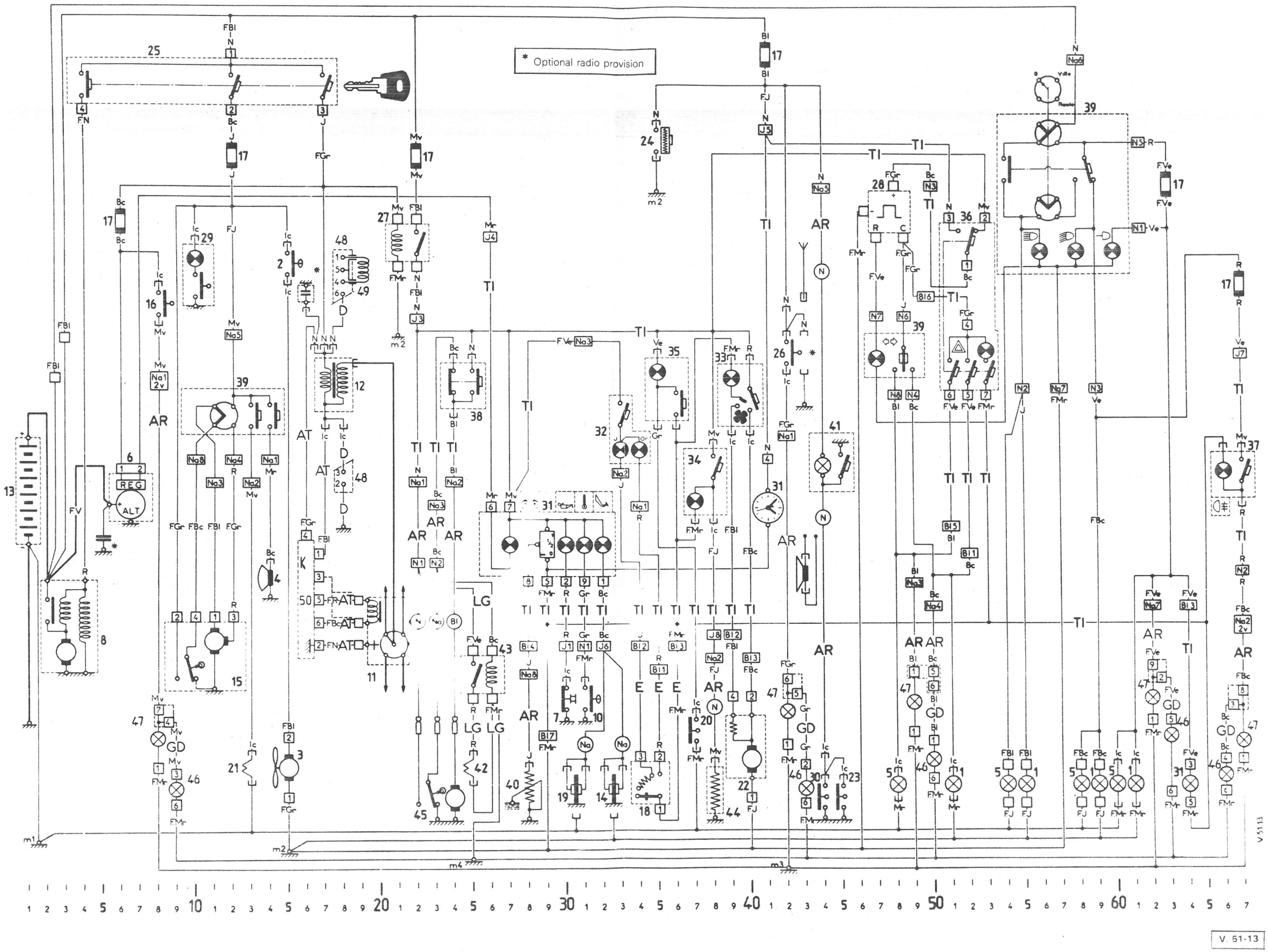
* Optional radio provision
REG
ALT
GD
AR
AT
TI
V 5113

LIST OF COMPONENTS

Ident. mark	Description	Position
1	Front lamp cluster, R.H. side :	
	- Direction indicator :	51
	- Sidelamp :	61
	- Headlamp, main beam :	55
	- Headlamp, dipped beam :	59
2	Electric fan thermal switch :	15
3	Radiator electric fan :	15
4	Horn :	14
5	Front lamp cluster, L.H. side :	
	- Direction indicator :	48
	- Side lamp :	60
	- Headlamp, main beam :	54
	- Headlamp, dipped beam :	58
6	Alternator with regulator :	6 - 7
7	Engine oil pressure switch :	30
8	Starter :	2 to 4
9	Idle cut-off :	5
10	Engine water thermal switch :	31
11	Distributor :	16 to 20
12	Ignition coil :	17 - 18
13	Battery :	1
14	R.H. front brake unit :	32 - 33
15	Windscreen wiper motor :	9 to 12
16	Reversing lamp switch :	8
17	Fuse box :	6 - 12 - 22 - 41 - 63 - 67
18	Econoscope sensor :	34 - 35
19	L.H. front brake unit :	30
20	Brake fluid level switch :	37
21	Windscreen washer pump :	13
22	Air blower :	40
23	R.H. front door switch :	45
24	Cigar-lighter :	35
25	Anti-theft switch :	4 - 12 - 17
26	Stoplamp switch :	42
27	Relay :	21 - 22
28	Flasher unit :	48
29	Choke control with warning lamp :	10
30	L.H. front door switch :	44
31	Dashboard :	
	- Battery charge warning lamp :	27
	- Gauge receiver :	29
	- Engine oil pressure warning lamp :	30
	- Water temperature warning lamp :	31
	- Front brake pad wear warning lamp :	32
	- Clock :	41
	- Dashboard lighting :	64
32	Econoscope switch :	33
	Econoscope yellow warning lamp :	33
	Econoscope orange warning lamp :	34
33	Air blower switch and warning lamp :	39
34	Heated rear window switch and warning lamp :	38
35	Test button for brake fluid warning lamp :	36
36	Hazard warning switch :	51 to 53
37	Rear fog lamp switch and warning lamp :	67
38	Rear window wiper and washer control :	24 -25
39	Satellite cylinder :	
	- Windscreen wiper and washer control :	10 to 13
	- Horn control :	14
	- Direction indicator control and warning lamp:	47-48
	- Lighting control (incl. headl. flashing) :	54 to 60
40	Fuel gauge rheostat :	28
41	Interior lamp :	44 - 45
42	Rear window washer pump :	25
43	Rear window washer pump relay :	25 - 26
44	Heated rear window :	38
45	Rear window wiper motor :	22 to 24
46	Rear lamp cluster, R.H. side :	
	- Tail lamp :	63
	- Direction indicator :	50
	- Stoplamp :	43
	R.H. reversing lamp :	9
	R.H. fog lamp :	66
47	Rear lamp cluster LH side :	
	L.H. fog lamp :	67
	Reversing lamp :	8
	- Tail lamp :	62
	- Direction indicator :	49
	- Stoplamp :	42
48	Diagnostic socket :	18
49	T.D.C. sensor :	19
50	Ignition module :	16

LIST OF EARTHING POINTS

m1	Earthing point on front valance, L.H. side	m3	Earthing point in boot, (rear L.H. side)
m2	Earthing point on flasher unit securing device (2 leads)	m4	Earthing point in boot, (rear R.H. side)

LIST OF WIRING HARNESSES

Without ident. mark **AR**	Front Rear	**BAR** : Rear fog lamps and reversing lamps **TI** : Dashboard and switches	**LG** : Rear window washer **D** : Diagnostic socket	**E** : Econoscope

KEY TO COLOUR MARKS

Bc : White **Bl** : Blue	**Gr** : Grey **Ic** : Colourless	**J** : Yellow **Mr** : Brown	**Mv** : Mauve **N** : Black	**R** : Red **Ve** : Green	**Na** : Natural **Or** : Orange

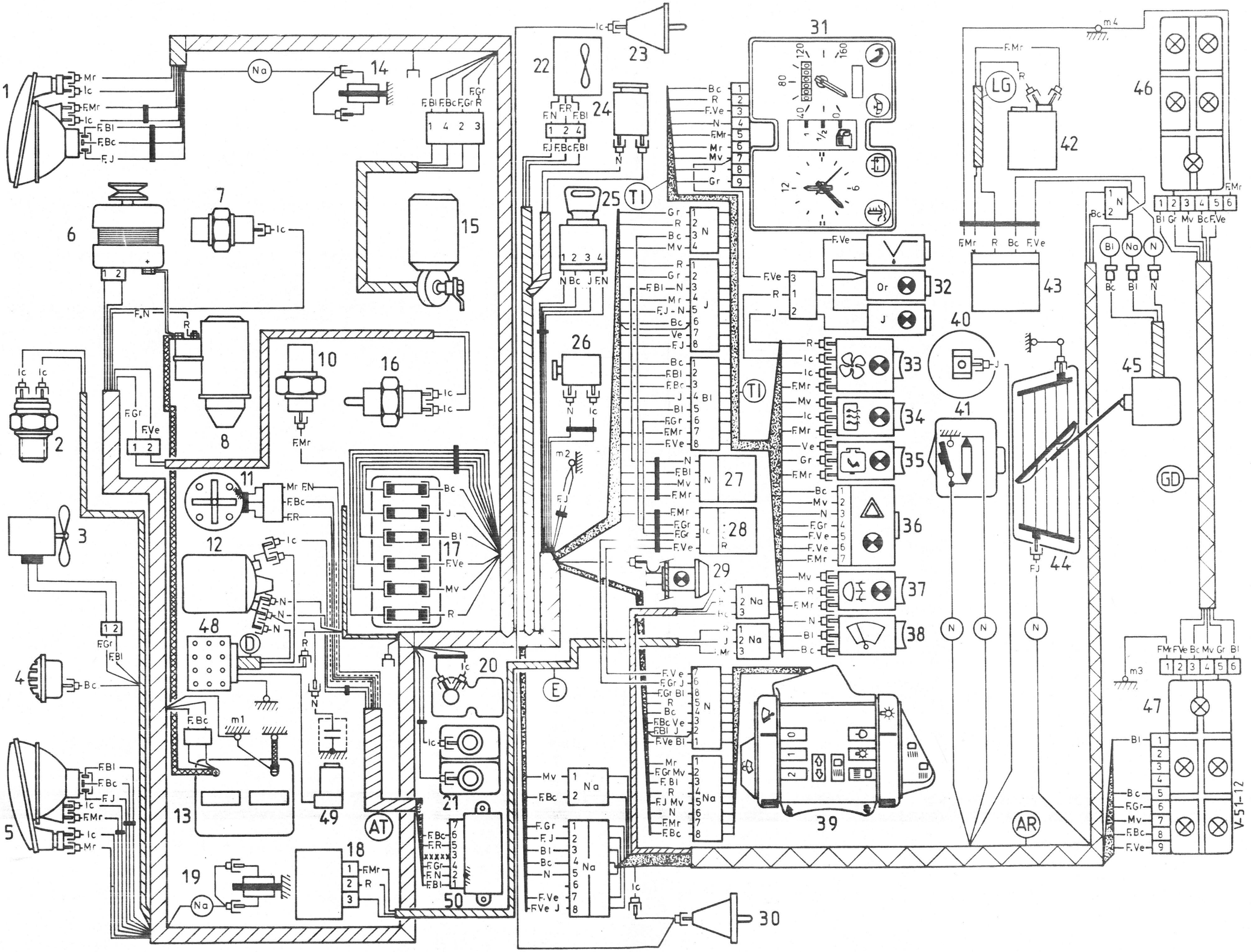

1
2
3
4
5
6
7
8
10
11
12
13
14
15
16
17
18
19
20
21
22
23
24
25
26
27
28
29
30
31
32
33
34
35
36
37
38
39
40
41
42
43
44
45
46
47
48
49
50
AT
AR
GD
LG
TI
E
D
V-51-12

V. 51-12

OPERATION
VD2. 510-00 e

VISA II SUPER X

3/1981 ⟶ 7/1981

ARRANGEMENT OF THE ELECTRICAL INSTALLATION

BULBS TABLE

Use	Number of bulbs	Base	Voltage	Power	International symbol
Headlamp main and dipped beam	2	P.43 t.38	12 V	60/55 W	H 4
Direction indicators Stoplamps Reversing lamps Rear fog lamps	4 2 2 2	BA. 15 s/19	12 V	21 W	P. 25/1
Sidelamps Direction indicator side-repeaters	2 2	BA. 9 s	12 V	4 W	T. 8/4
Tail lamps	2	BA. 15 s/19	12 V	5 W	R. 19/5
Interior lamp	1	Festoon	12 V	5 W	C. 11
Choke warning lamp Dashboard warning lamps Dashboard illumination	1 4 1	Wedge base dia. 5	12 V	1.2 W	
Warning lamps on satellite cylinder	4			1 W	
Warning lamps combined with test buttons *(unremovable bulb but removable unit)*	5	« Luciole »	12 V	1 W	

FUSE TABLE

Current supply	Fuses		Equipment protected
	Colour	Amperage	
Positive terminal of battery "+" (with ignition key in "ignition on" position)	Yellow lead	16 A	Electric cooling fan Windscreen wiper motor Windscreen washer pump Horn Brake fluid level warning lamp
	White lead	10 A	Idle cut-off Reversing lamps Regulator feed on alternator
Positive terminal of battery "+"	Mauve lead	16 A	Rear screen wiper and washer motor Warning lamps for oil pressure, battery charge and front brake pad wear and water temperature Fuel gauge receiver Brake fluid warning lamp Heated rear window + warning lamp + blower motor Clock display supply Direction indicators and warning lamp
	Blue lead	16 A	Clock (feed) Stop lights - Radio (option) Interior lamp Hazard warning lamps Cigar lighter
Satellite cylinder	Green lead	10 A	Side and tail lamps Dashboard lighting Lighting attenuation for clock display segments
	Red lead	10 A	Rear fog lamps + warning lamp

Colour Code

Bc	: White
Bl	: Blue
Gr	: Grey
Ic	: Colourless
J	: Yellow
Mr	: Brown
Mv	: Mauve
N	: Black
R	: Red
Ve	: Green

* Optional radio provision

LIST OF COMPONENTS

Ident. mark	Description	Position
1	Front lamp cluster, R.H. side :	
	- Direction indicator :	51
	- Sidelamp :	61
	- Headlamp, main beam :	55
	- Headlamp, dipped beam :	59
2	Electric fan thermal switch :	15
3	Radiator electric fan :	15
4	Horn :	14
5	Front lamp cluster, L.H. side :	
	- Direction indicator :	48
	- Side lamp :	60
	- Headlamp, main beam :	54
	- Headlamp, dipped beam :	58
6	Alternator with regulator :	6 - 7
7	Engine oil pressure switch :	30
8	Starter :	2 to 4
9	Idle cut-off :	5
10	Engine water thermal switch :	31
11	Distributor :	19 to 21
12	Ignition coil :	17 - 18
13	Battery :	1
14	R.H. front brake unit :	32 - 33
15	Windscreen wiper motor :	9 to 12
16	Reversing lamp switch :	8
17	Fuse box :	6 - 12 - 22 - 41 - 63 - 67
19	L.H. front brake unit :	30 - 31
20	Brake fluid level switch :	37
21	Windscreen washer pump :	13
22	Air blower :	40
23	R.H. front door switch :	45
24	Cigar-lighter :	35
25	Anti-theft switch :	4 - 12 - 17
26	Stoplamp switch :	42
27	Relay :	21 - 22
28	Flasher unit :	48
29	Choke control with warning lamp :	10
30	L.H. front door switch :	44
31	Dashboard :	
	- Battery charge warning lamp :	27
31	- Gauge receiver :	29
	- Engine oil pressure warning lamp :	30
	- Water temperature warning lamp :	31
	- Front brake pad wear warning lamp :	32
	- Dashboard lighting :	64
33	Air blower switch and warning lamp :	39
34	Heated rear window switch and warning lamp :	38
35	Test button for brake fluid warning lamp :	36
36	Hazard warning switch :	51 to 53
37	Rear fog lamp switch and warning lamp :	67
38	Rear window wiper and washer control :	24 -25
39	Satellite cylinder :	
	- Windscreen wiper and washer control :	10 to 13
	- Horn control :	14
	- Direction indicator control and warning lamp:	47-48
	- Lighting control (incl. headl. flashing) :	54 to 60
40	Fuel gauge rheostat :	28
41	Interior lamp :	44 - 45
42	Rear window washer pump :	25
43	Rear window washer pump relay :	25 - 26
44	Heated rear window :	38
45	Rear window wiper motor :	22 to 24
46	Rear lamp cluster, R.H. side :	
	- Tail lamp :	63
	- Direction indicator :	50
	- Stoplamp :	43
	R.H. reversing lamp :	9
	R.H. fog lamp :	66
47	Rear lamp cluster LH side :	
	L.H. fog lamp :	67
	Reversing lamp :	8
	- Tail lamp :	62
	- Direction indicator :	49
	- Stoplamp :	42
48	Diagnostic socket :	18
49	T.D.C. sensor :	19

LIST OF EARTHING POINTS

m1	Earthing point on front valance, L.H. side	m3	Earthing point in boot, (rear L.H. side)
m2	Earthing point on flasher unit securing device (2 leads)	m4	Earthing point in boot, (rear R.H. side)

LIST OF WIRING HARNESSES

Without ident. mark Front **AR** Rear	**GD** : Rear fog lamps and reversing lamps **TI** : Dashboard and switches	**LG** : Rear window washer **D** : Diagnostic socket

KEY TO COLOUR MARKS

Bc : White **Bl** : Blue	**Gr** : Grey **Ic** : Colourless	**J** : Yellow **Mr** : Brown	**Mv** : Mauve **N** : Black	**R** : Red **Ve** : Green	**Na** : Natural **Or** : Orange

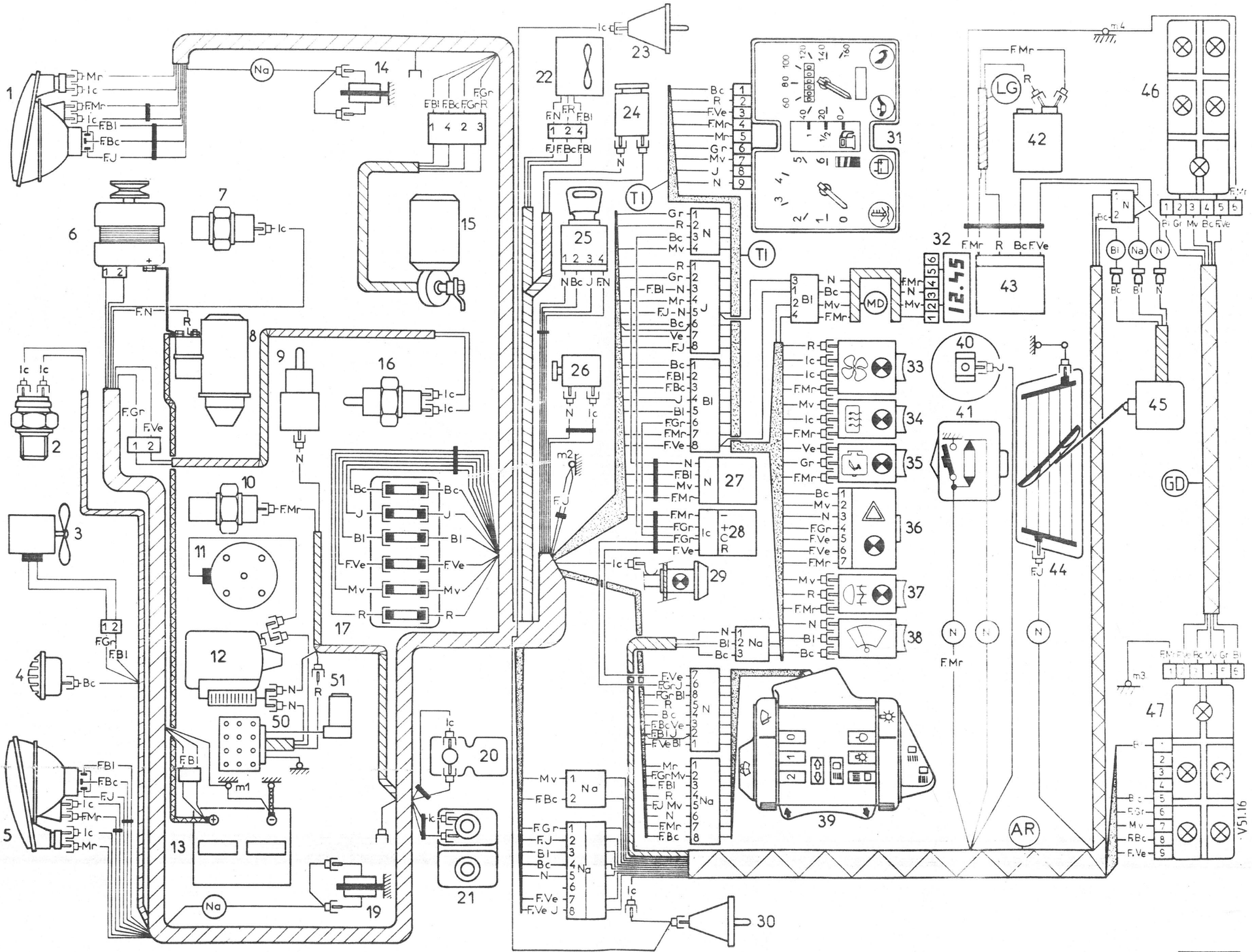

1
2
3
4
5
6
7
8
9
10
11
12
13
14
15
16
17
19
20
21
22
23
24
25
26
27
28
29
30
31
32
33
34
35
36
37
38
39
40
41
42
43
44
45
46
47
50
51
Na
TI
LG
MD
GD
AR
12.45
m1
m2
m3
m4
V51.16

V. 51-16

OPERATION
VD2. 510-00 f

VISA II SUPER E

VISA II L

7/1981 ⟶

ARRANGEMENT OF THE
ELECTRICAL INSTALLATION

BULB TABLE

Use	Number of bulbs	Base	Voltage	Power	International type
Headlamp main and dipped beam (L)	2	P. 45 t. 41	12 V	45/40 W	E. 2
Headlamp main and dipped beam (E)	2	P.43 T.38	12 V	60/55 W	H 4
Direction indicators Stoplamps Reversing lamps Rear fog lamps	4 2 2 2	BA. 15 s/19	12 V	21 W	P. 25/1
Sidelamps	2	BA. 9 s	12 V	4 W	T. 8/4
Tail lamps	2	BA. 15 s/19	12 V	5 W	R. 19/5
Interior lamp	1	Festoon	12 V	5 W	C. 11
Choke warning lamp Dashboard warning lamps Dashboard lighting Warning lamps on econoscope (E)	1 4 1 2	Wedge base dia. 5	12 V	1.2 W	
Warning lamps on satellite	4			1 W	
Warning lamps combined with test buttons *(unremovable bulb but removable unit)*	5	« Luciole »	12 V	1 W	

FUSE TABLE

Current supply	Fuses		Equipment protected
	Colour	Amperage	
Positive terminal of battery "+" (with ignition key in "ignition on" position)	Yellow lead	16 A	Windscreen wiper motor and timer Windscreen washer pump Horn Choke warning lamp Cooling fan
	White lead	10 A	Regulator on alternator Reversing lamps
Positive terminal of battery « + » (via relay)	Mauve lead	16 A	Fuel gauge receiver Rear window wiper and washer (optional) Heated rear window and warning lamp Air blower and warning lamp Warning lamps : battery charge, brake pad wear, oil pressure, water temperature Brake fluid level and econoscope warning lamps (E) Heated rear window - blower motor and warning lamp Direction indicators + warning lamp
Positive terminal of battery « + »	Blue lead	16 A	Hazard warning lamps + warning lamp on dashboard Interior lamp Radio *(optional)* - cigar lighter (E) Clock Stoplamps
Satellite cylinder	Green lead	10 A	Side and tail lamps + warning lamp Dashboard lighting
	Red lead	10 A	Rear fog lamps + warning lamp

E : as fitted to VISA II SUPER E - L : as fitted to VISA II L

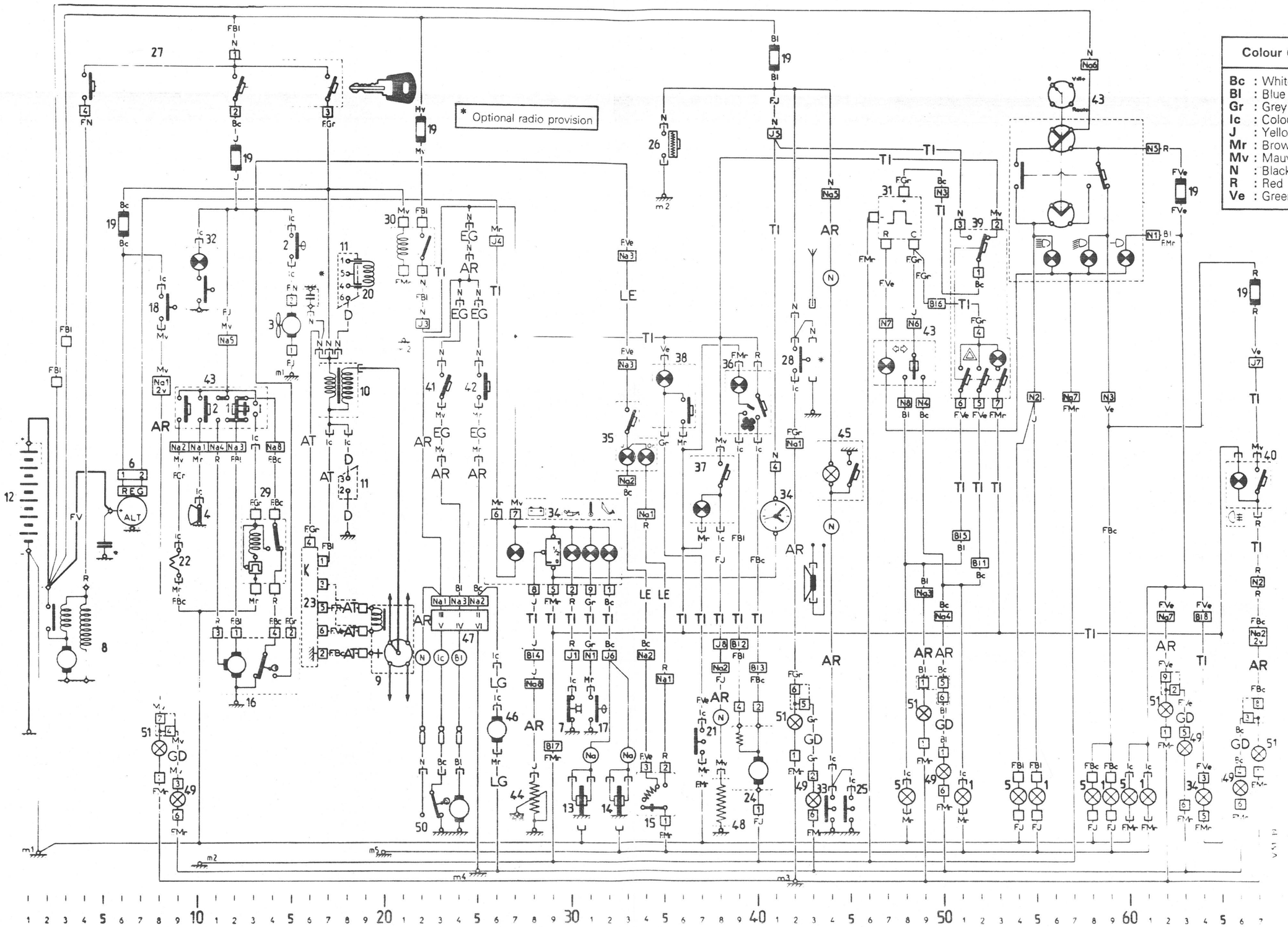
* Optional radio provision
Colour Code
Bc : White
Bl : Blue
Gr : Grey
Ic : Colourless
J : Yellow
Mr : Brown
Mv : Mauve
N : Black
R : Red
Ve : Green

V. 51-19

LIST OF COMPONENTS

Ident. mark	Description	Position	Ident. mark	Description	Position
1	RH front lamp cluster : Main beam	55	31	Flasher unit	47 - 48
	Dipped beam	59	32	Choke control with warning lamp	10
	Indicator and sidelamp	51 - 61	33	LH front courtesy switch	44
2	Thermal switch for cooling fan	15	34	Dashboard :	
3	Cooling fan	15		- Clock	41
4	Horn	10		- Fuel gauge	29
5	LH front lamp cluster : Main beam	54		- Battery charge warning lamp	27
	Dipped beam	58		- Oil pressure warning lamp	30
	Indicator and sidelamp	48 - 60		- Water temperature warning lamp :	31
6	Combined alternator and regulator	6 - 7		- Brake pad wear warning lamp :	32
7	Engine oil pressure switch :	30		- Dashboard illumination	64
8	Starter motor	2 to 4	35	Econoscope switch and warning lamp (E)	33-34
9	Distributor (magnetic triggering)	19 to 21	36	Blower motor switch and warning lamp	39-40
10	Ignition coil	7 - 8	37	Heated rear window switch and warning	37-38
11	Diagnostic socket	18	38	Test button for brake fluid level	35 - 36
12	Battery	1	39	Hazard warning switch	51 to 53
13	LH. front brake unit	30 - 31	40	Rear fog lamp switch and warning lamp	66-67
14	RH front brake unit :	31 - 33	41	Rear screen wiper delay switch	23
15	Econoscope vacuum capsule (E)	34 - 35	42	Rear screen wash/wipe switch	25
16	Windscreen wiper motor	11 to 15	43	Satellite switch unit :	
17	Water temperature switch	31		- Windscreen wash/wipe switch	9 - 11 to 13
18	Reverse lamp switch :	8		- Horn switch	10
19	Fuse box :	6 - 12 - 22 - 41 - 63 - 67		- Direction indicator switch	47 to 49
20	T.D.C. sensor	19		- Headlamp and flasher switch	54 to 60
21	Brake fluid warning switch	37	44	Tank unit	28
22	Windscreen washer pump	9	45	Interior light	44 - 45
23	Electronic ignition module	16	46	Rear screen washer pump	26
24	Blower motor	39 - 40	47	Rear wiper delay unit	23 - 25
25	R.H. front courtesy switch :	45	48	Heated rear window :	38
26	Cigar-lighter (E)	35	49	RH rear lamp unit - Reverse - Stop	9 -43
27	Ignition switch	4 - 12 - 17		Indicator - Fog - Sidelight	50 - 66 - 63
28	Stop light switch :	42	50	Rear screen wiper motor	22 to 24
29	Front wiper delay unit	13 - 14	51	LH rear lamp unit - Reverse - Stop	8 - 42
30	Auxiliary relay	21 - 22		Indicator - Fog - Sidelight	49 - 67 - 62

LIST OF EARTHING POINTS

m1	LH front earth point	m4	RH rear earth point (inside boot)
m2	Flasher unit fixing point earth	m5	RH front earth point
m3	LH rear earth point (inside boot)		

DESCRIPTION OF WIRING HARNESSES

AV : Front (unmarked)	**EG** : Switches - rear wiper	**D** : Diagnostic
AR : Rear	**LG** : Rear washer	**GD** : Rear lamps
AT : Transistorised ignition	**LE** : Econoscope	**TI** : Dashboard and switches

KEY TO COLOUR CODE

Bc : White	**J** : Yellow	**R** : Red
Bl : Blue	**Mr** : Brown	**Ve** : Green
Gr : Grey	**Mv** : Mauve	**Na** : Natural
Ic : Colourless	**N** : Black	

Note : A colour code preceded by **F** = wire colour : e.g. **F.Ve** = Green wire

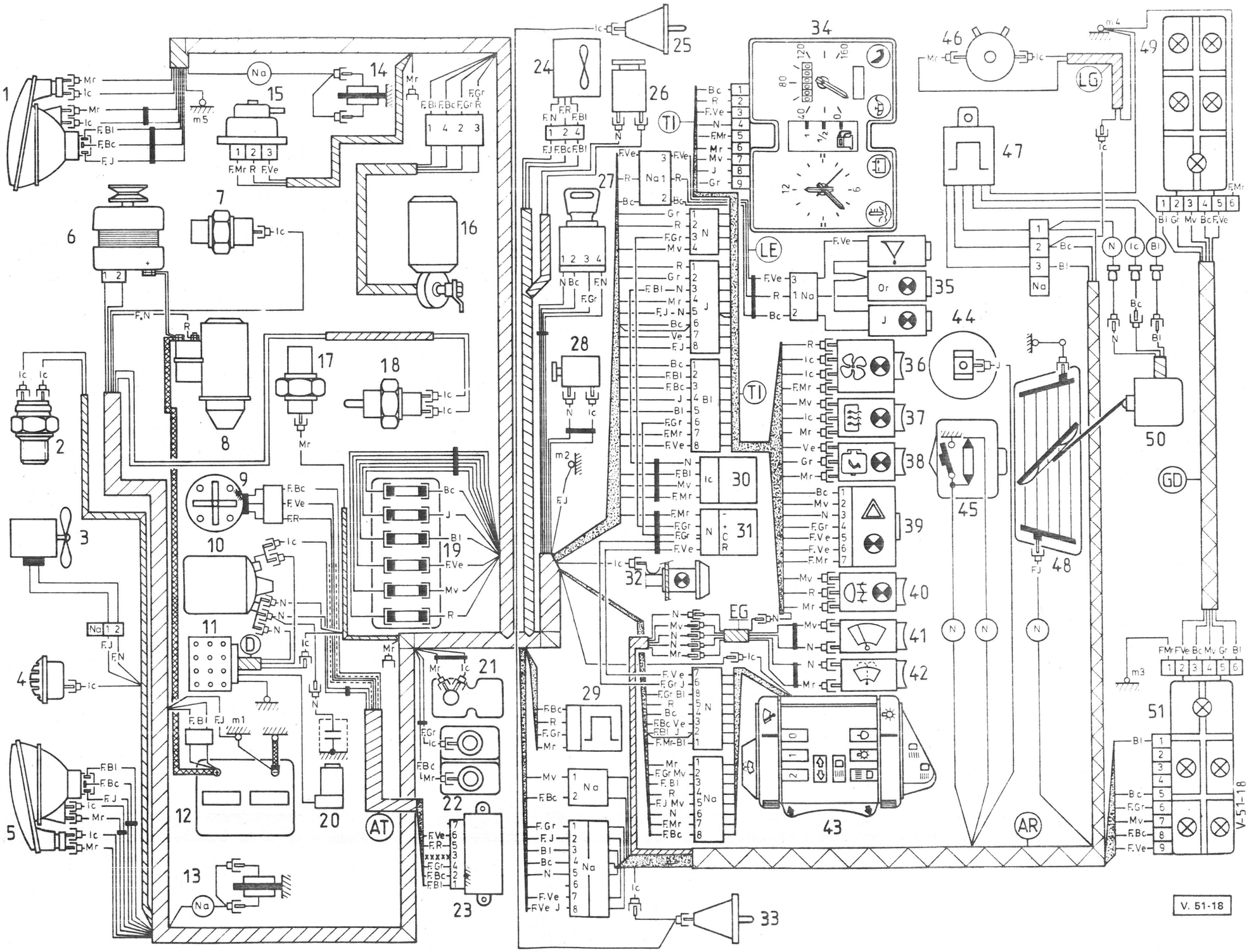
1
2
3
4
5
6
7
8
9
10
11
12
13
14
15
16
17
18
19
20
21
22
23
24
25
26
27
28
29
30
31
32
33
34
35
36
37
38
39
40
41
42
43
44
45
46
47
48
49
50
51
AT
AR
EG
LE
LG
GD
TI
m1
m2
m3
m4
m5
V. 51-18

OPERATION
VD2. 510-00 g

VISA II SUPER X

7/1981 ⟶

ARRANGEMENT OF THE
ELECTRICAL INSTALLATION

BULB TABLE

Use	Number of bulbs	Base	Voltage	Power	International type
Headlamp main and dipped beam	2	P.43 t.38	12 V	60/55 W	H 4
Direction indicators Stoplamps Reversing lamps Rear fog lamps	4 2 2 2	BA. 15 s/19	12 V	21 W	P. 25/1
Sidelamps Direction indicator side-repeaters	2 2	BA. 9 s	12 V	4 W	T. 8/4
Tail lamps	2	BA. 15 s/19	12 V	5 W	R. 19/5
Interior lamp	1	Festoon	12 V	5 W	C. 11
Choke warning lamp Dashboard warning lamp Dashboard illumination	1 4 1	Wedge base dia. 5	12 V	1.2 W	
Warning lamps on satellite cylinder	4			1 W	
Warning lamps combined with test buttons *(unremovable bulb but removable unit)*	5	« Luciole »	12 V	1 W	

FUSE TABLE

Current supply	Fuses		Equipment protected
	Colour	Amperage	
Positive terminal of battery « + » (with ignition key in "ignition on" position)	Yellow lead	16 A	Engine cooling fan Windscreen wiper motor Windscreen washer Horn Choke warning
	White lead	10 A	Feed to regulator (on alternator) Idle cut-off Reversing lamps
Positive terminal of battery "+"	Mauve lead	16 A	Fuel gauge Rear window wiper and washer (optional) Heated rear window and warning lamp Air blower and warning lamp Warning lamps for brake pad wear, oi pressure, water temperature Clock display feed
	Blue lead	10 A	Direction indicators + warning lamp Hazard warning lamp Interior lamp Radio *(optional)* - Cigar lighter + stoplamps
Satellite cylinder	Green lead	10 A	Side and tail lamps + warning Dashboard lighting Attenuation of clock display segments
	Red lead	10 A	Rear fog lamps + warning lamp

* Optional radio provision

V. 51-21

LIST OF COMPONENTS

Ident. mark	Description	Position
1	RH front lamp cluster : Mainbeam	55
	Dippedbeam	59
	Indicator and sidelamp	51 - 61
2	Thermal switch for cooling fan	15
3	Cooling fan	15
4	Horn	10
5	LH front lamp cluster : Main beam	54
	Dipped beam	58
	Indicator and sidelamp	48 - 60
6	Combined alternator and regulator	6 - 7
7	Engine oil pressure switch :	30
8	Starter motor	2 to 4
9	Idle cut off valve	5
10	Water temperature switch	31
11	Distributor	16 to 20
12	Ignition coil	17 - 18
13	Diagnostic socket	16
14	Battery	1
15	RH. front brake unit	32 - 33
17	Windscreen wiper motor	11 to 15
18	Reverse lamp switch :	8
19	Fuse box :	6 - 12 - 22 - 41 - 63 - 67
20	T.D.C. sensor	17
21	LH front brake unit	30 - 31
22	Brake fluid warning switch	37
23	Screen washer pump	9
24	Blower motor	40
25	RH front courtesy switch :	45
26	Cigar-lighter	35
27	Ignition switch	4 - 12 - 17
28	Stop light switch :	42
29	Windscreen wiper delay unit	13 - 14
30	Relay	21 - 22
31	Flasher unit	47 - 48
32	Choke control with warning lamp	10
33	LH front courtesy switch	44
34	Dashboard :	
	- Rev. counter	20
	- Fuel gauge	29
	- Battery charge warning lamp	27
	- Oil pressure warning lamp	30
	- Water temperature warning lamp :	31
	- Brake pad wear warning lamp :	32
	- Dashboard illumination	64
36	Clock	32 to 34
37	Blower motor switch and warning lamp	39
38	Heated rear window switch and warning	37-38
39	Test button for brake fluid level	35 - 36
40	Hazard warning switch	51 to 53
41	Rear fog lamp switch and warning lamp	66-67
42	Rear screen wiper delay switch	23
43	Rear screen wash/wipe switch	25
44	Satellite switch unit :	
	- Windscreen wash/wipe switch	9 - 11 to 13
	- Horn switch	10
	- Direction indicator switch + warning	47 to 49
	- Headlamp and flasher switch	54 to 60
45	Fuel tank unit	28
46	Interior light	44 - 45
47	Rear screen washer pump	26
48	Rear wiper delay unit	23 to 25
49	Heated rear window :	38
50	RH rear lamp unit - Side - Indicator	63 - 50
	Stop - Reverse - Rear fog	43 - 9 - 66
51	Rear screen wiper motor	22 to 24
52	LH rear lamp unit - Side - Indicator	62 - 49
	Stop - Reverse - Rear fog	42 - 8 - 67

LIST OF EARTHING POINTS

m1	LH front earth point	m3	LH rear earth point (inside boot)
m2	Flasher unit fixing earth point	m4	RH rear earth point (inside boot)

DESCRIPTION OF WIRING HARNESSES

Unmarked : Front	**EG** : Rear screen wiper switch	**LG** : Rear screen washer	**D** : Diagnostic
AR : Rear	**TI** : Dashboard and switches	**GD** : Rear fog lamp switch	**MD** : Clock

KEY TO COLOUR CODES

Bc : White	**J** : Yellow	**R** : Red
Bl : Blue	**Mr** : Brown	**Ve** : Green
Gr : Grey	**Mv** : Mauve	**Na** : Natural
Ic : Colourless	**N** : Black	

Note : A colour code preceded by **F =** wire colour. e.g. **F.Ve =** Green wire

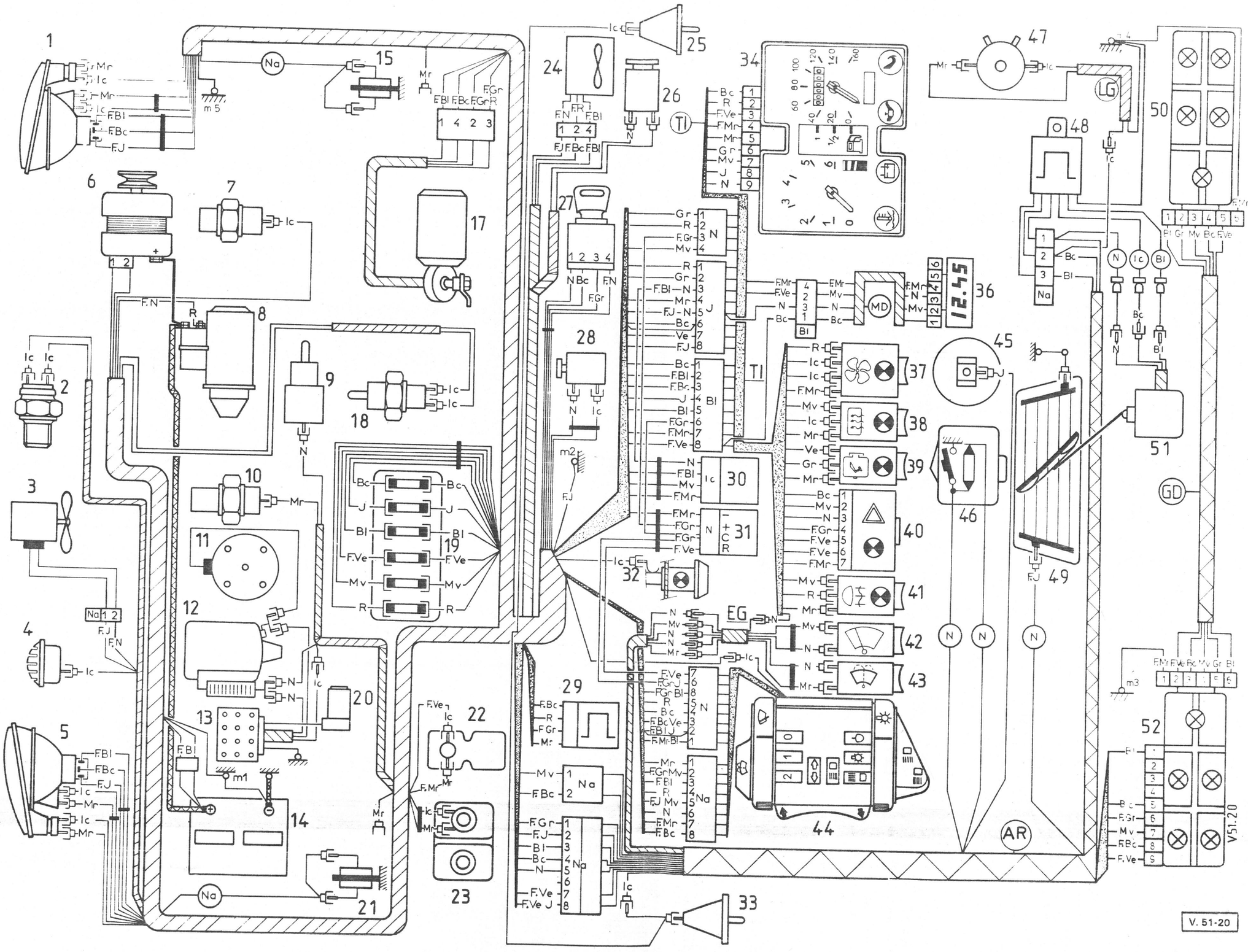

1
2
3
4
5
6
7
8
9
10
11
12
13
14
15
17
18
19
20
21
22
23
24
25
26
27
28
29
30
31
32
33
34
36
37
38
39
40
41
42
43
44
45
46
47
48
49
50
51
52
12.45
EG
TI
MD
LG
GD
AR
V51.20

V. 51-20

OPERATION
VD1.532-0

CHARACTERISTICS AND CHECKS OF THE ELECTRICAL COMPONENTS

I - CHARACTERISTICS

1. Alternator :

Single phase alternator with built-in electronic regulator
DUCELLIER 512 008 - PARIS-RHONE A 12 M 11 - MOTOROLA 9 AR 2662 F.
Nominal rating : 450 W with a voltage U = 14 volts
Nominal current : 33 amperes
Nominal speed : 8000 rpm
Maximum speed : 12 000 rpm
Direction of rotation (seen from drive end) : clockwise
Resistance of inductor : 4 ± 0.2 Ω at 20° C (68° F).
Tightening torque of pulley nut : 5.5 da Nm (39.7 ft.lb)
Tension of alternator drive belt :
- Fitting tension (new belt) : 350 to 400 N (78 to 89 lb.f)
- Working tension : 250 to 300 N (56 to 67 lb.f) (measured after two revolutions of the driving pulley).

Ratio of engine speed to alternator speed : 2/1.

2. Regulator : DUCELLIER 511-004 - PARIS-RHONE YL 123 - MOTOROLA 9 RC 7034.

3. Charge warning lamp :

Controlled by an electronic system integrated to the regulator.
Lights up in two cases : when the charge is either too low or too high :
- The warning lamp lights up when the voltage is below 12.8 volts approximately.
- The warning lamp is off when the voltage is between 12.8 and 15 volts approximately.
- The warning lamp lights up when the voltage is above 15 volts approximately.

II - CHECKS ON THE VEHICLE

The following checks should be carried out with a well-charged battery. Connect up as per diagram opposite (using a combined VOLTMETER - AMMETER - RHEOSTAT)

1. Checking the alternator output (engine hot).

Progressively increase the engine speed and measure the alternator output, keeping the voltage at 13.5 volts by means of the rheostat **(Rh).**

Measuring the output under 13.5 volts : (ammeter **A**)
- 13 amperes at 850 rpm engine speed (1700 rpm alternator speed)
- 27 amperes at 1500 rpm engine speed (3000 rpm alternator speed)
- 32 amperes at 3000 rpm engine speed (6000 rpm alternator speed)
- 33 amperes at 4000 rpm engine speed (8000 rpm alternator speed)

2. Checking the regulated voltage (voltmeter **V**) :

Accelerate the engine until the speed reaches 3000 rpm (6000 rpm alternator speed).
Increase the alternator output from 5 amperes to 28 amperes.
The voltage should be between 13.8 volts and 14.5 volts at 22 ± 5° C (71 ± 9° F).

NOTE :
In case a malfunction is noticed in the charging circuit, check the the tension of the drive belt as well as the voltage supplying the alternator (after switching on the ignition).
In order to find the defective element :
Replace the regulator and carrry out a check. If the malfunction persists : the alternator is defective.

V.53-1

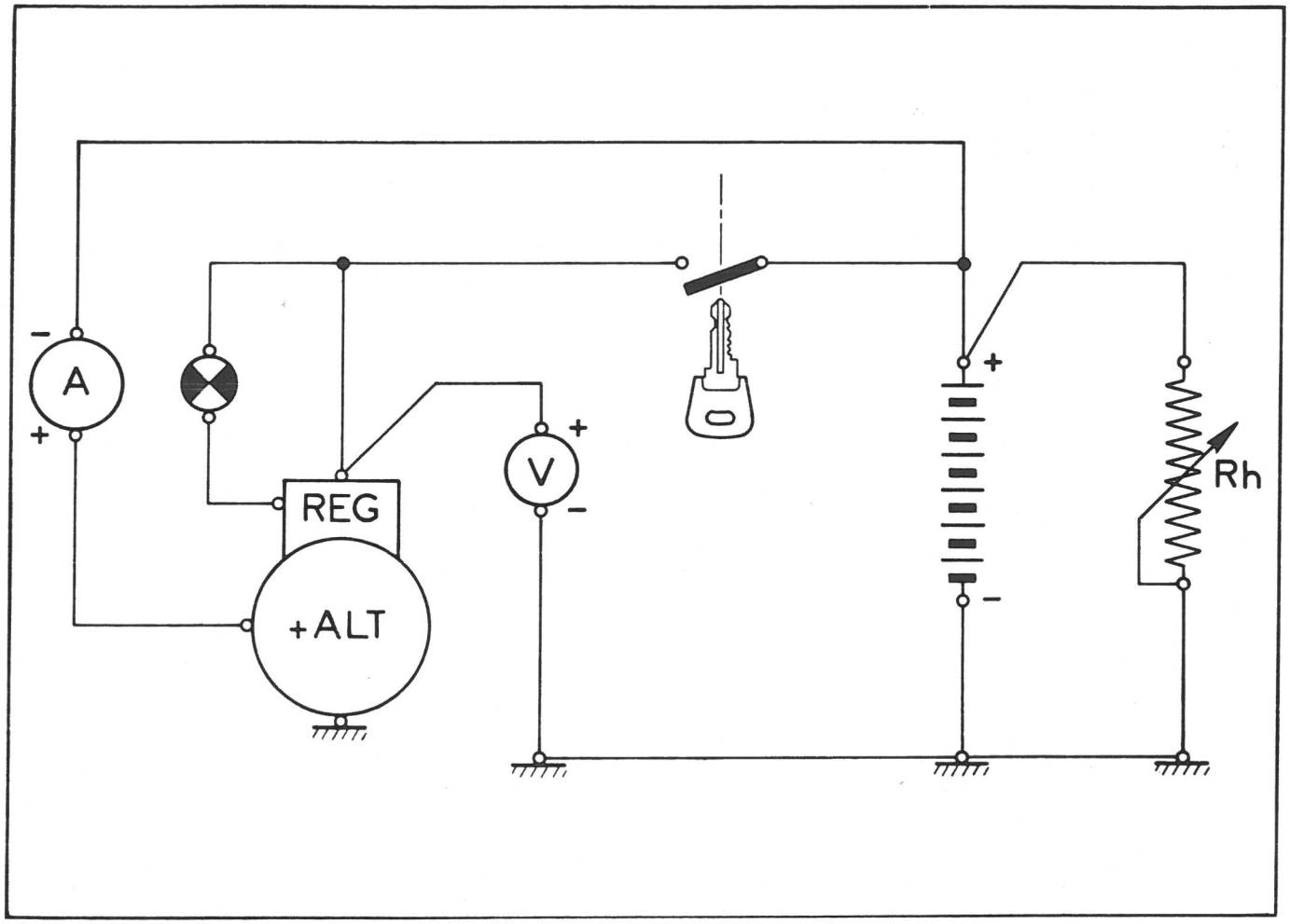

LIST OF VD2. OPERATIONS IN SECTION IV

Operation number	DESCRIPTION
	ELECTRICAL SYSTEM
VD. 510-000	Arrangement of the electrical installation (General outlines)
VD2. 510-00 a	Arrangement of the electrical installation
VD2. 532-0	Characteristics and checks of the electrical components

OPERATION VD. 510-000

ARRANGEMENT OF THE ELECTRICAL INSTALLATION
(General outlines)

PRESENTATION

All the operations describing the arrangement of the electrical installation comprise the following tables and diagrams :

- bulb table,
- fuse table,
- wiring diagram,
- circuit diagram,
- list of components,
- description of wiring harnesses.
- list of earthing points.

READING THE DIAGRAMS

The wiring diagram indicates the layout of the leads and the approximate location of the components.

The circuit diagram presents the various circuits in a functional way, which can be very helpful when trying to find out the cause of a malfunction in the electrical system. When a unit is connected to several circuits, its various sections are shown in "exploded form" on different vertical grid lines.

Method of identification :

The method of identification is the same for both wiring and circuit diagrams.

The numbers printed in large types identify the components.

They appear in numerical sequence on the wiring diagram and on the list of components (L.H. column).

The list of components is the link between both diagrams.

The numbers in the R.H. column, which also appear in the lower part of the circuit diagram, indicate the position of a given component on this diagram.

The wiring harnesses are identified by large block letters.

Usually, the main harness (front harness) is not identified on the circuit diagram.

The leads are identified by colour marks on the lead itself or on the insulating sleeve. The key to colour marks is indicated on page 6, Operation VD2. 510-00 a.

When only a colour is indicated, it is the colour of the sleeve. For example : Mv = Mauve sleeve.

When the colour mark is preceded by letter F., the colour mentioned is that of the lead. For example : F Ve = green lead.

If necessary, both indications can be given at the same time : F.Ve Mv = green lead with mauve sleeve.

The leads carrying no identification mark cannot be mistaken.

The marks identifying the "exploded" harness connecting blocks on the circuit diagram indicate the colour of the considered connection block and the channel No. For example : Na 4 : *colour of connection block : Natural; channel No. : 4.*

Two harnesses can sometimes be joined by two connection blocks *of the same colour,* but carrying a different number of channels. In that case, to avoid all possible mistakes, *the smaller connection block* is identified by indicating the total number of channels, in addition to other information concerning the colour of the connector and the channel number.

For example : Na 1 / 2 V — *Colour of connection block : Natural; channel No. : 1*
Total number of channels in the connection block : 2.

KEY TO DIAGRAM SYMBOLS — TT. 51-3 a

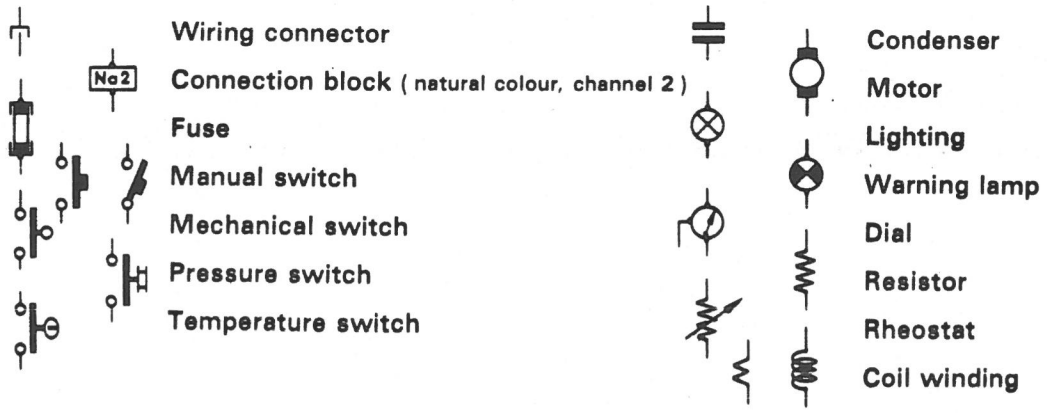

OPERATION
VD2. 510-00 a

ARRANGEMENT OF THE ELECTRICAL INSTALLATION

813-1 (IV)

BULB TABLE

Use	Number of bulbs	Base	Voltage	Power	International symbol
Headlamp main and dipped beam	2	P.43 t. 38	12 V	60/55 W	H 4
Direction indicators Stoplamps Reversing lamps Rear fog lamps	4 2 2 2	BA. 15 s/19	12 V	21 W	P. 25/1
Sidelamps Direction indicator side-repeaters	2 2	BA. 9 s	12 V	4 W	T. 8/4
Tail lamps	2	BA. 15 s/19	12 V	5 W	R. 19/5
Interior lamp	1	Festoon	12 V	5 W	C. 11
Dasboard warning lamps Dasboard lighting	4 1	Wedge base dia. 5	12 V	1.2 W	
Warning lamps on satellite cylinder	4			0.36 W	
Warning lamps combined with test buttons *(unremovable bulb but removable unit)*	5	"Luciole"	12 V	1 W	

FUSE TABLE

Current supply	Fuses		Equipment protected
	Colour	Amperage	
Positive terminal of battery "+" (with ignition key in "ignition on" position)	Yellow lead	16 A	Electro-fan Windscreen wiper motor Windscreen washer motor Horn
	White lead	10 A	Supply to regulator on alternator Reversing lamps
Positive terminal of battery "+"	Mauve lead	16 A	Rear window wiper and washer Warning lamps for battery charge, oil pressure, water temperature, front brake pad wear Fuel gauge receiver Warning lamp for brake fluid level Heated rear windows + warning lamp Air blower
	Blue lead	10 A	Cigar lighter Clock Stoplamps Interior lamp Direction indicators + warning lamp Warning lamp for hazard warning device
Satellite cylinder	Green lead	10 A	Side and tail lamps + warning lamp Dasboard lighting
	Red lead	10 A	Rear fog lamps + warning lamp

WIRING DIAGRAM

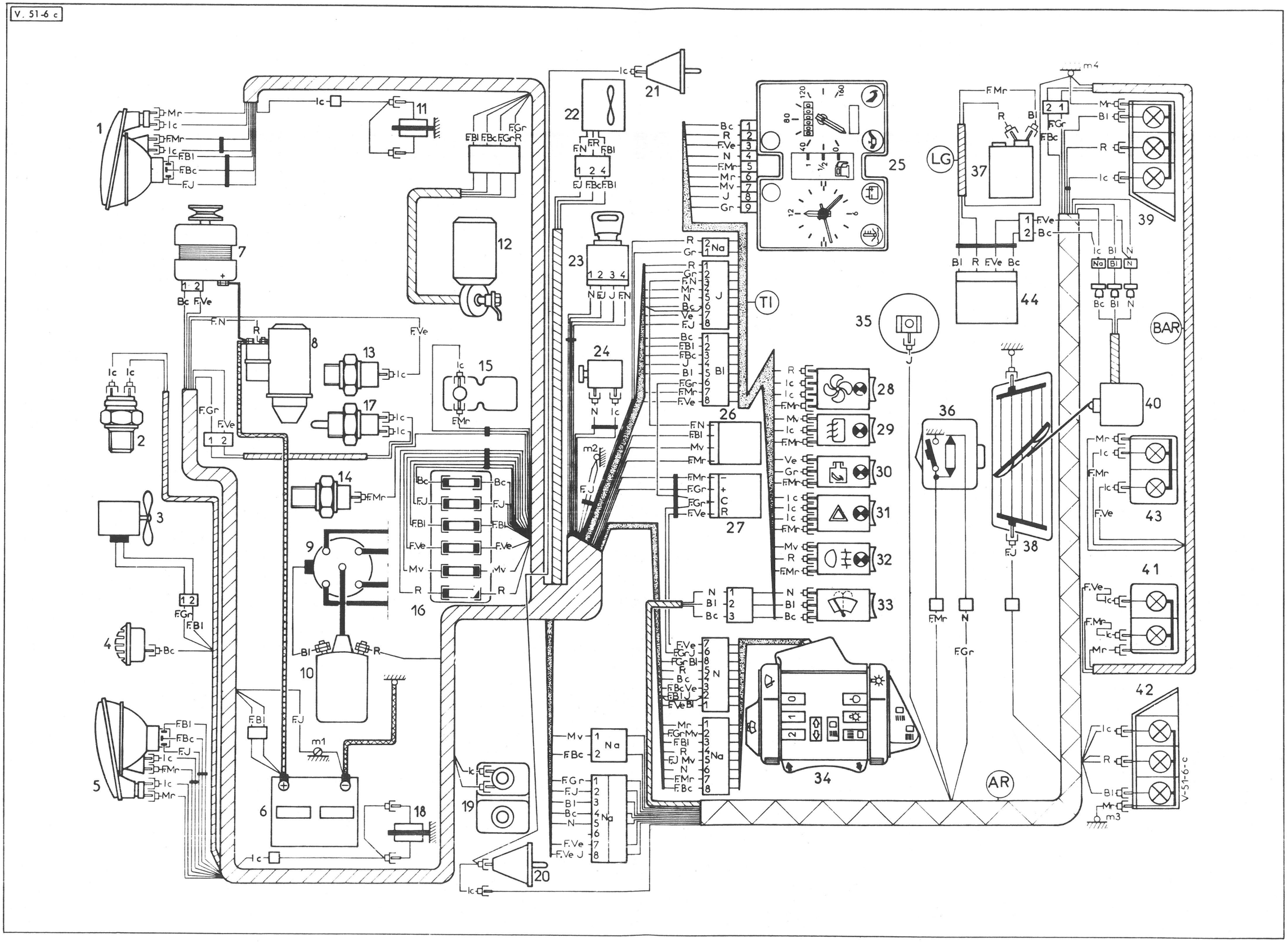

LIST OF COMPONENTS

Ident. mark	Description : ..... and ..... Position
1	Front lamp cluster, R.H. side :
	- Direction indicator : 51
	- Sidelamp : 61
	- Headlamp, main beam : 55
	- Headlamp, dip beam : 59
2	Thermal switch for electro-fan : 8
3	Electro-fan : 8
4	Horn : 14
5	Front lamp cluster, L.H. side :
	- Direction indicator : 48
	- Sidelamp : 60
	- Headlamp, main beam : 54
	- Headlamp, dip beam : 58
6	Battery : 1
7	Alternator, with regulator : ..... 6 - 7
8	Starter : ..... 2 to 4
9	Distributor : ..... 16 to 20
10	Ignition coil : 17-18
11	R.H. brake unit : 32-33
12	Windscreen wiper motor : ..... 9 to 12
13	Engine oil pressure switch : 30
14	Water temperature switch : 31
15	Switch for brake fluid level : 35
16	Fuse box : ..... 5 - 12 - 22 - 41 - 61 - 67
17	Switch for reversing lamps : 15
18	L.H. brake unit : 30-31
19	Windscreen washer pump : 13
20	Switch for L.H. door : 44
21	Switch for R.H. door : 45
22	Air blower : 39-40
23	Anti-theft switch : ..... 4 -12 -17
24	Stoplamp switch : 42
25	Dasboard instruments :
	- Charge warning lamp : 27
	- Fuel gauge receiver : 29
	- Engine oil pressure warning lamp : 30
	- Water temperature warning lamp : 31
	- Front brake pad wear warning lamp : 32
	- Clock : 41
	- Dasboard lighting : 64
26	Relay : 21-22
27	Flasher unit : 47-48
28	Air blower switch and warning lamp : 39-40
29	Heated rear window switch and warning lamp : 37-38
30	Check button and warning lamp for brake fluid : 34-35
31	Hazard warning switch : ..... 51 to 53
32	Rear fog lamp switch and warning lamp : ... 66-67
33	Rear window wiper and washer : 24-25
34	Satellite cylinder :
	- Windscreen wiper/washer control : ..... 11 to 13
	- Horn switch : 14
	- Direction indicator control and warning lamp : ... 45-
	- Lighting control (incl. headl. flashing) : .... 54 to 60
35	Fuel gauge : 28
36	Interior lamp : 44-45
37	Rear window washer pump : 25
38	Heated rear window : 38
39	Rear lamp cluster, R.H. side :
	- Tail lamp : 68
	- Direction indicator : 50
	- Stoplamp : 43
40	Rear window wiper motor : ..... 22 to 24
41	Reversing lamp, L.H. side : 15
	Rear fog lamp, L.H. side : 67
42	Rear lamp cluster, L.H. side :
	- Tail lamp : 62
	- Direction indicator : 49
	- Stoplamp : 42
43	Reversing lamp, R.H. side : 16
	Rear fog lamp, R.H. side : 66
44	Relay for rear window washer pump : 25-26

LIST OF EARTHING POINTS

m1	- Earthing point on front valance, L.H. side : 1	**m3**	Earthing point in boot, rear L.H. side : 15
m2	- Earthing point on flasher unit : 8	**m4**	Earthing point in boot, rear R.H. side : 25

DESCRIPTION OF WIRING HARNESSES

No identification mark : Front harness
AR : Rear harness
BAR : Rear fog lamps and reversing lamps
TI : Dasboard and switches
LG : Screen washer

KEY TO COLOUR MARKS

Bc : White	**J** : Yellow	**R** : Red
Bl : Blue	**Mr** : Brown	**Ve** : Green
Gr : Grey	**Mv** : Mauve	**Na** : Natural
Ic : Colourless	**N** : Black	

NOTE : When the colour mark is preceded by letter **F.** , the colour mentioned is that of the lead.
For exemple : **F.Ve** = Green lead

CIRCUIT DIAGRAM

V. 51-5 c

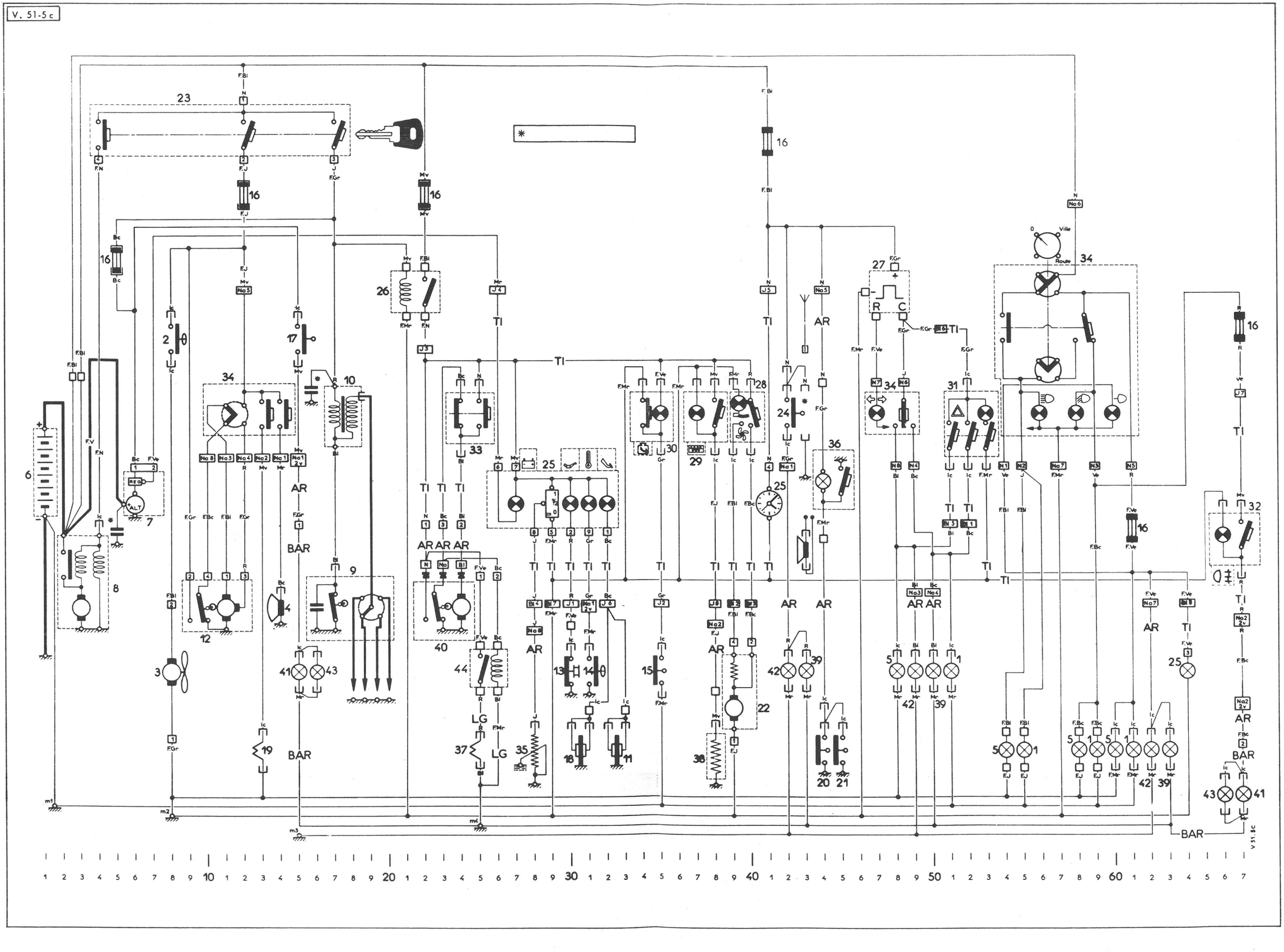

OPERATION
VD2. 532-0

CHARACTERISTICS AND CHECKS OF THE ELECTRICAL COMPONENTS

I - CHARACTERISTICS

1. Alternator :

Single phase alternator with built-in electronic regulator
DUCELLIER 512 010 A - PARIS-RHONE A 12 M9
Nominal rating : 450 W with a voltage U = 13,5 volts
Nominal current : 33 amperes
Nominal speed : 8000 rpm
Maximum speed : 12 000 rpm
Direction of rotation (seen from drive end) : clockwise
Resistance of inductor : 4 ± 0.2 Ω at 20° C (68° F).
Tightening torque of pulley nut : 5.5 da Nm (39.7 ft.lb)
Tension of alternator drive belt :
- Fitting tension (new belt) : 350 to 400 N (78 to 89 lb.f)
- Working tension : 250 to 300 N (56 to 67 lb.f) (measured after two revolutions of the driving pulley).
Ratio of engine speed to alternator speed : 1.77/1

2. Regulator : DUCELLIER 511-004 - PARIS-RHONE YL 123.

3. Charge warning lamp :

Controlled by an electronic system integrated to the regulator.
Lights up in two cases : when the charge is either too low or too high :

- The warning lamp lights up when the voltage is below 12.8 volts approximately.
- The warning lamp is off when the voltage is between 12.8 and 15 volts approximately.
- The warning lamp lights up when the voltage is above 15 volts approximately.

II - CHECKS ON THE VEHICLE

The following checks should be carried out with a well-charged battery. Connect up as per diagram opposite (using a combined VOLTMETER - AMMETER - RHEOSTAT)

1. Checking the alternator output (engine hot).

Progressively increase the engine speed and measure the alternator output, keeping the voltage at 13.5 volts by means of the rheostat **(Rh).**

Measuring the output under 13.5 volts : (ammeter **A**)
- 13 amperes at 950 rpm engine speed (1700 rpm alternator speed)
- 27 amperes at 1700 rpm engine speed (3000 rpm alternator speed)
- 32 amperes at 3400 rpm engine speed (6000 rpm alternator speed)
- 33 amperes at 4500 rpm engine speed (8000 rpm alternator speed)

2. Checking the regulated voltage (voltmeter **V**) :

Accelerate the engine until the speed reaches 3400 rpm (6000 rpm alternator speed).
Increase the alternator output from 5 amperes to 28 amperes.
The voltage should be between 13.8 volts and 14.5 volts at 22° C (71° F).

NOTE :
In case a malfunction is noticed in the charging circuit, check the tension of the drive belt as well as the voltage supplying the alternator (after switching on the ignition).
In order to find the defective element :
Replace the regulator and carry out a check. If the malfunction persists : the alternator is defective.

V.53-1

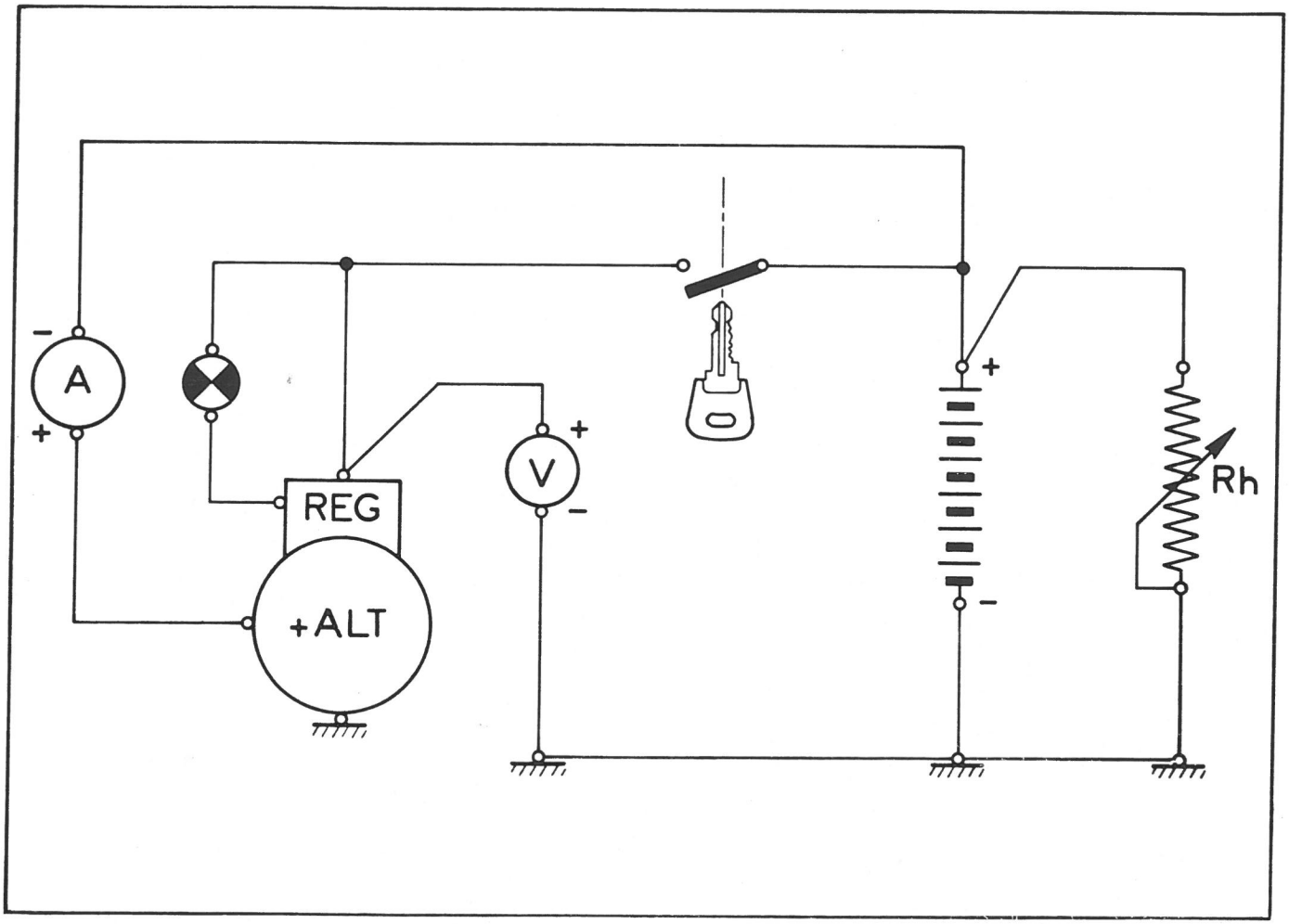

MANUFACTURING DRAWINGS FOR TOOLS NOT SOLD
M.R. TOOLS

FOR VD1 VEHICLES

PARTS LIST

MR. 630-11/18 : Oil cooler union spanner (engine) Page III
A : Arc weld
B : Semi-hard steel, square or round bar, diameter 6 mm, length 250 mm
C : 16 mm 12-sided ring spanner

MR. 630-27/18 : Pinchers for retarding dowels (gearbox) Page IV
A : Round bar, diameter 5 mm, length 180 mm
B : Round bar, diameter 5 mm
C : Plate, thickness 1.5 mm, length 26 mm
D : Round bar, diameter 5 mm, length 300 mm
E : Semi-hard steel

MR. 630-31/69 : Mandrel for fitting clutch plate Page IV
Semi-hard steel

MR. 630-43/4 : Workbench engine support Page IV
Plate thickness = 10 mm
This support should be fitted onto stand MR. 630-43/15

MR. 630-43/15 : Stand for engine and gearbox support on workbench Page IV
Semi-hard steel
A : Straighten the face after assembly
B : Two welded feet

MR. 630-43/40 : Simplified support for engine on workbench Page V
A : 4 x 20 mm bar, one of each
B : Steel tube 12 x 27 mm, quantity 3
The component mounting holes (A) are drilled depending on bench design

MR. 630-56/9 a : Pressure gauge for measuring crankcase oil vacuum Page VI
A : 1 wooden strip, thickness 20 mm
B : 1 glass or plastic tube
C : 4 rubber protectors
D : 5 clamps
E : 1 rule
F : 1 flexible piping depending on diameter of B
G : 1 end socket depending on diameter of F
H : 1 seal adapter ZD 9 333 100 V

MR. 630-31/84 : Mandrel for mecanindus pin (2 parts) Page VI
Treated semi-hard steel
1 part : L = 59
1 part : L = 37.5

MR. 630-25/22 : Ball-joint extractor sleeve Page VI
C 35 steel

MR. 630-31/126 : Mandrel for fitting steering gear needle bearing cage Page VII
C 35 steel
No-tolerance dimensions ± 0.25
All corners rounded

MR. 630-94/30 : Bonnet catch hook PageVII
Drawn steel : diameter 5 mm

MR.630_11/18

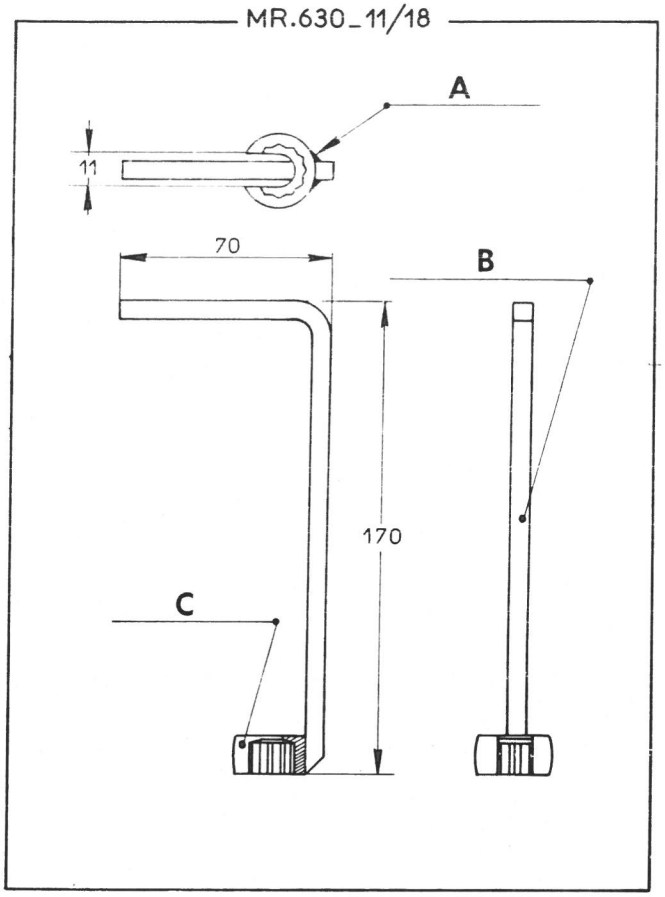

MR.630_27/18

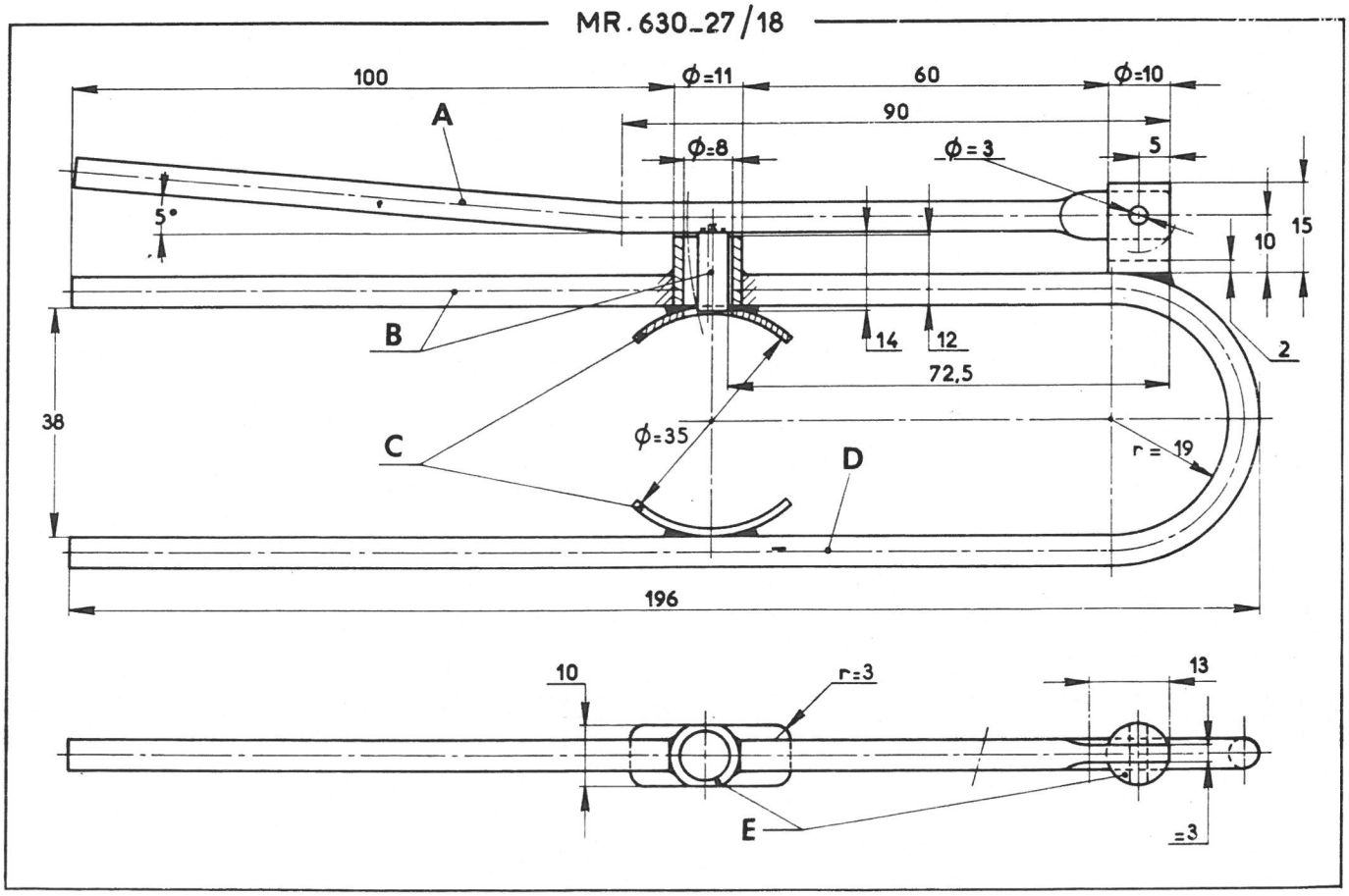

MR. 630-31/69

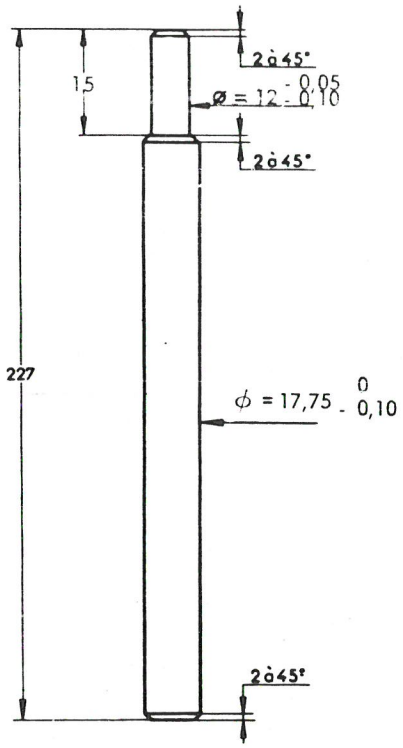

MR. 630-43/4

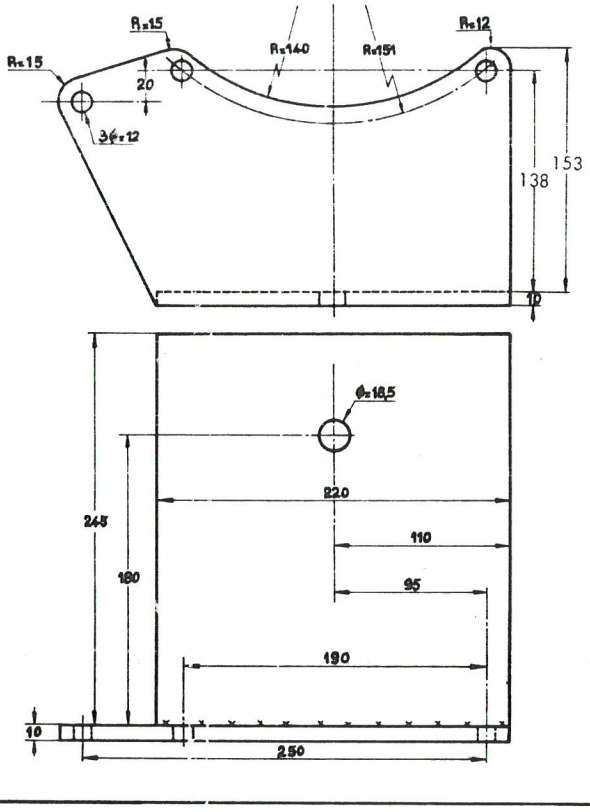

MR. 630_43/15

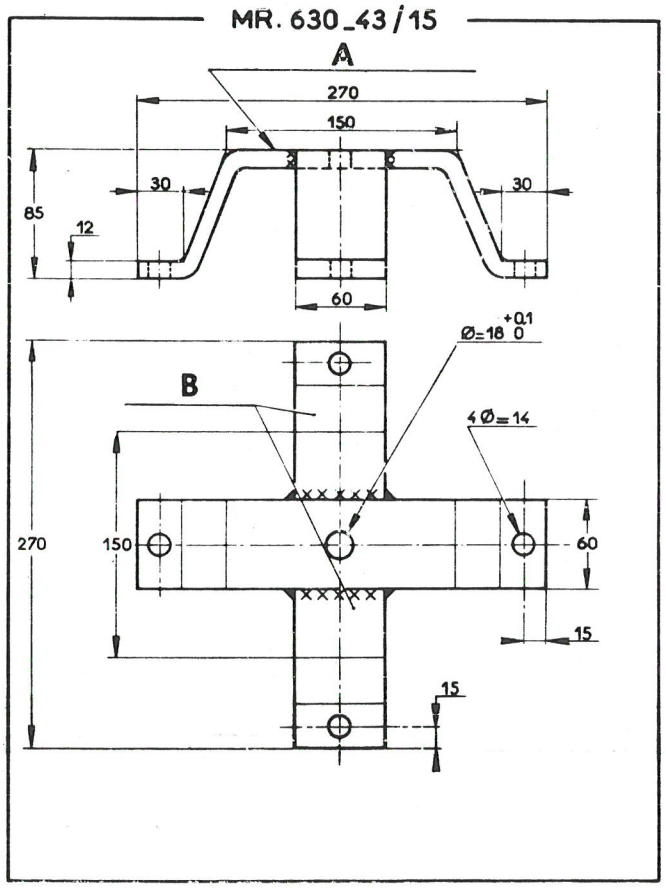

MR. 630-43/40

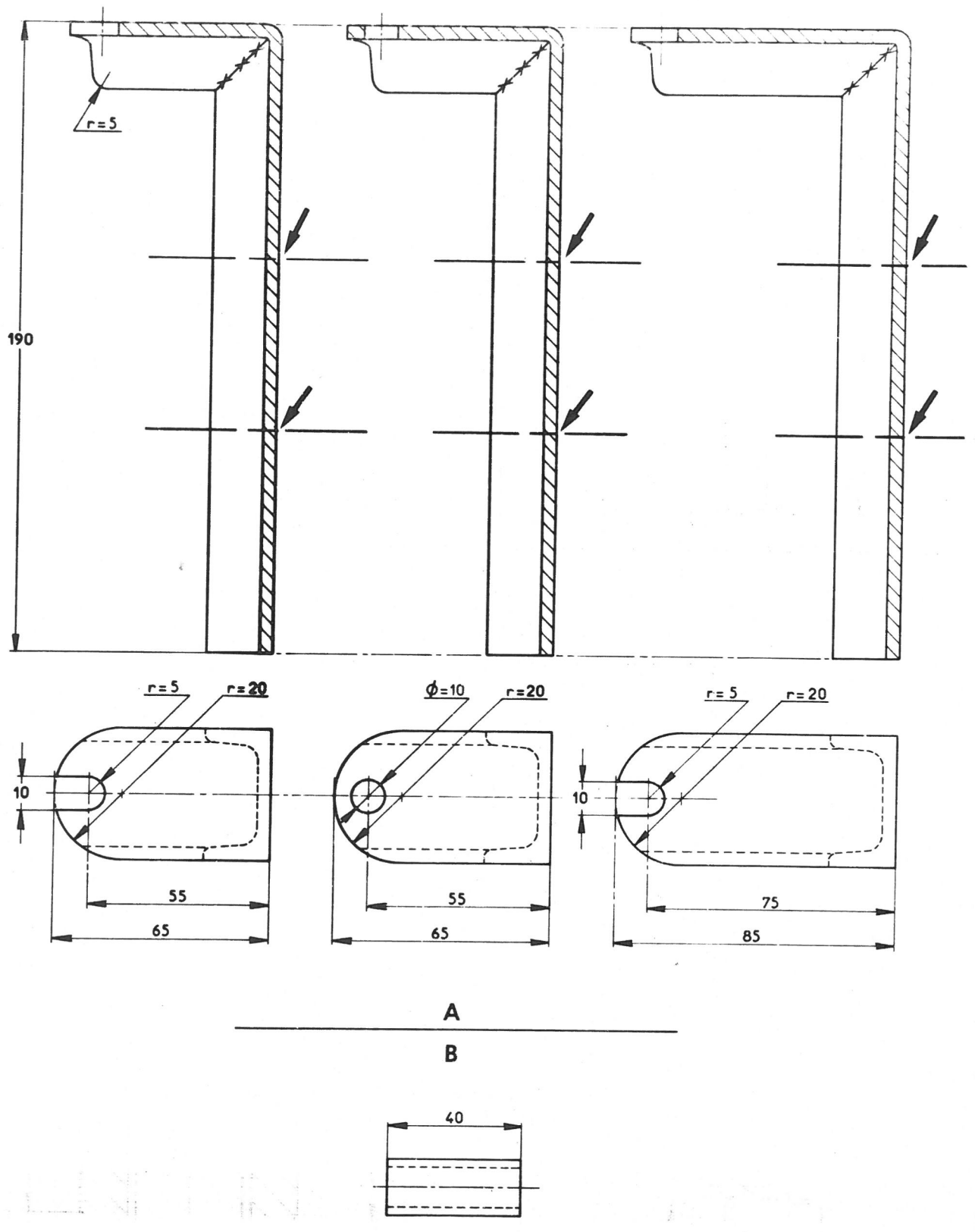

MR 630_56/9a

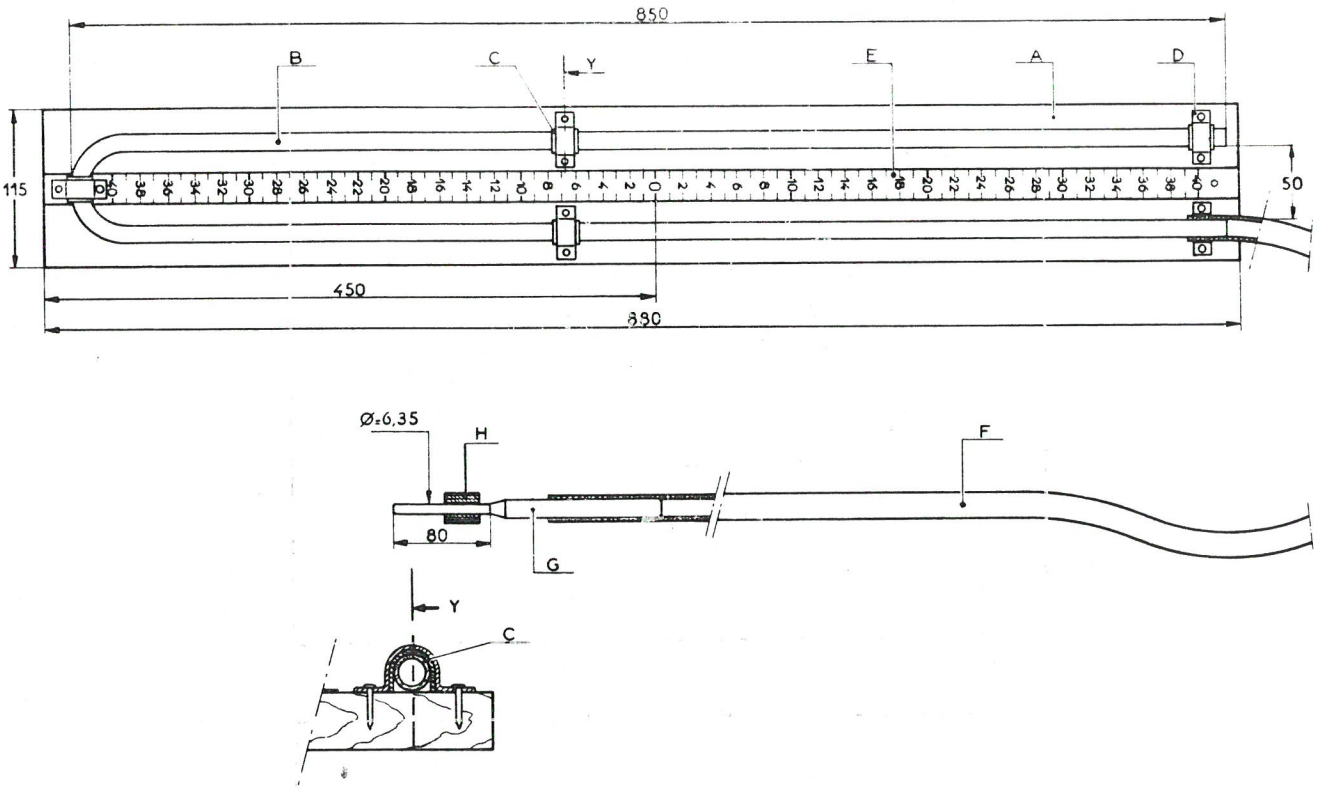

MR 630 31 84

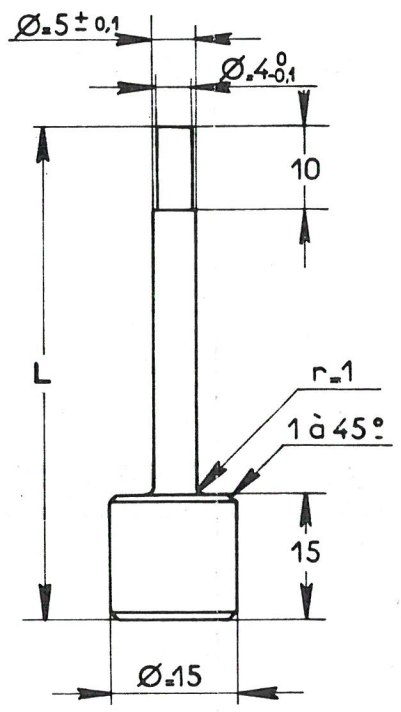

MR 630-25/22

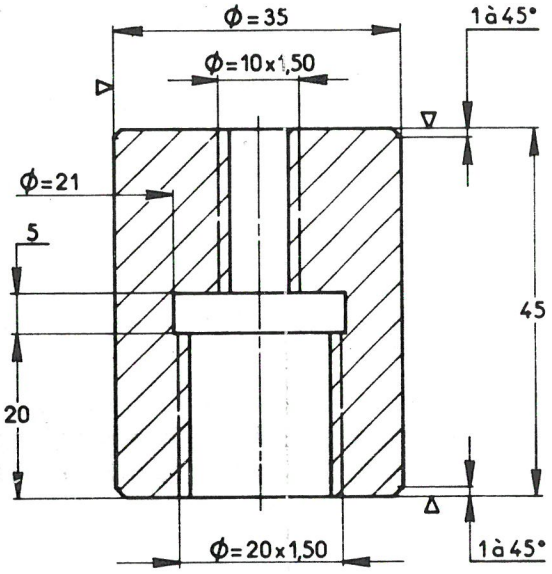

Acier_C 35

MR. 630-31/126

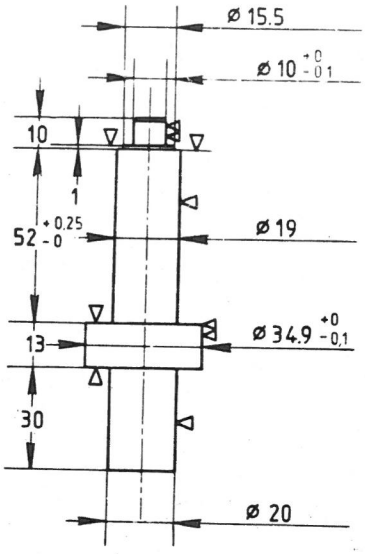

MR. 630-84 30

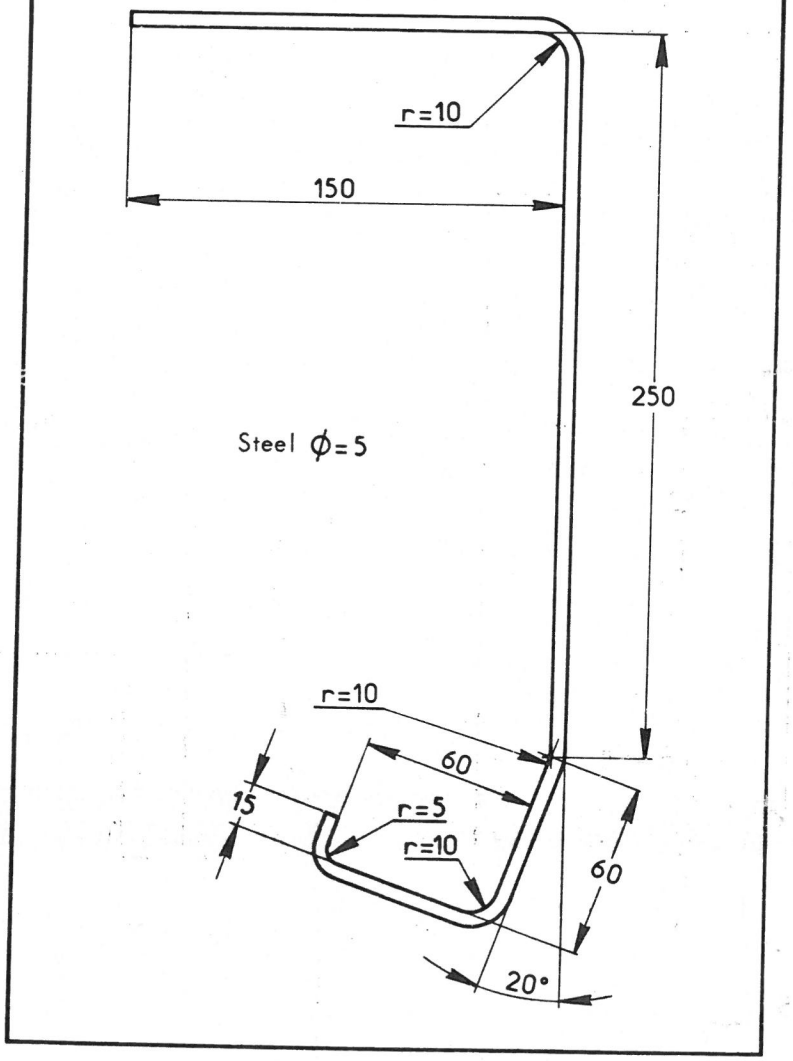

MANUFACTURING DRAWINGS FOR TOOLS NOT SOLD
M.R. TOOLS

FOR VD2 VEHICLES

MR. 630-84/30 : Bonnet opening hook Page III
Drawn steel, diameter 5 mm

MR. 630-71/9 : Checking gauge for SOLEX 32 PBIS A 7 carburettor float Page IV
Metal thickness 1.5 mm

MR. 630-34/54 : Chuck for fitting and removal of the tri-pin Page V
C 35 steel

MR. 630-34/55 : Protector fitting bush Page V
C 35 steel

MR. 630-34/56 : Tri-pin removal support plate Page V
C 35 steel

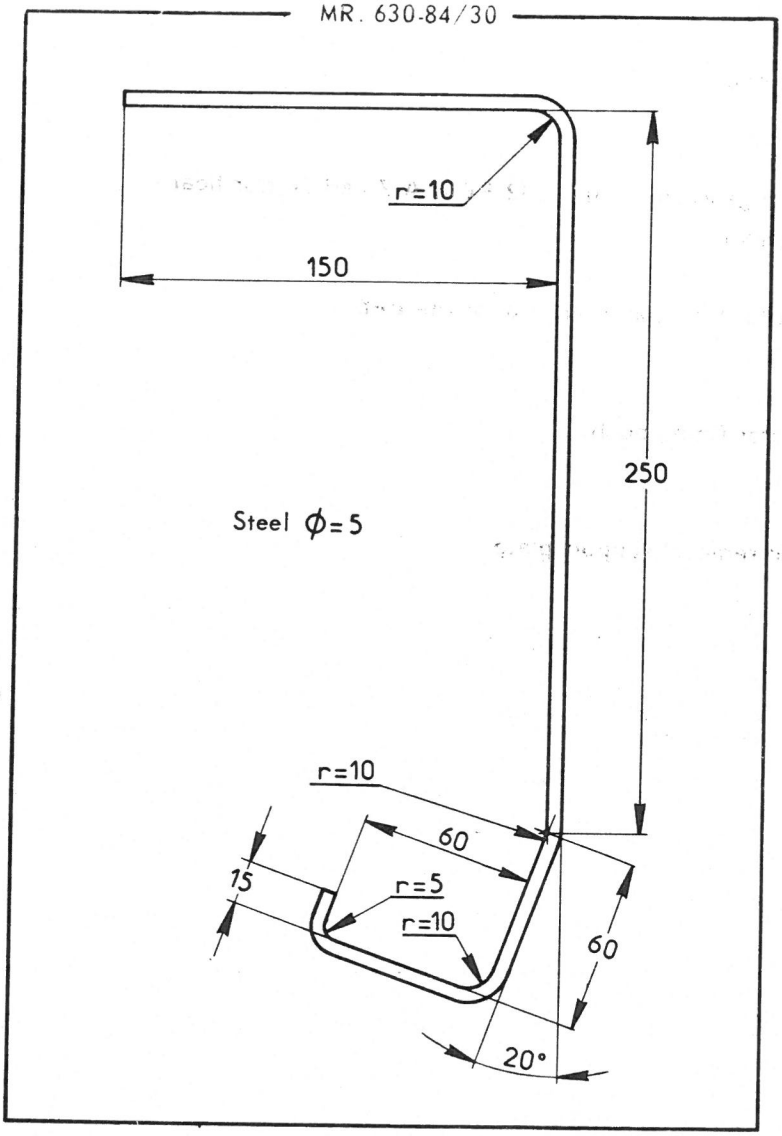
MR. 630-84/30
r=10
150
250
Steel ϕ=5
r=10
60
15
r=5
r=10
60
20°

MR 630-71 / 9

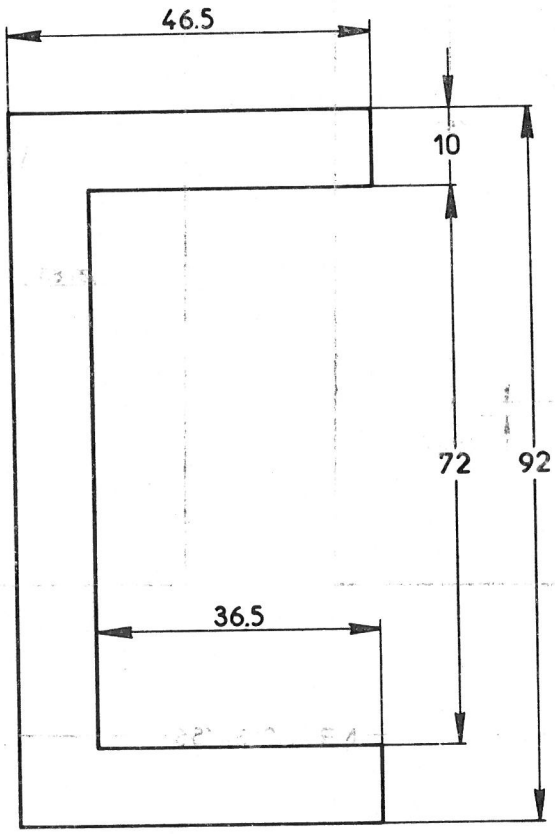

Sheet metal thickness = =1,5

MR 630_34/54

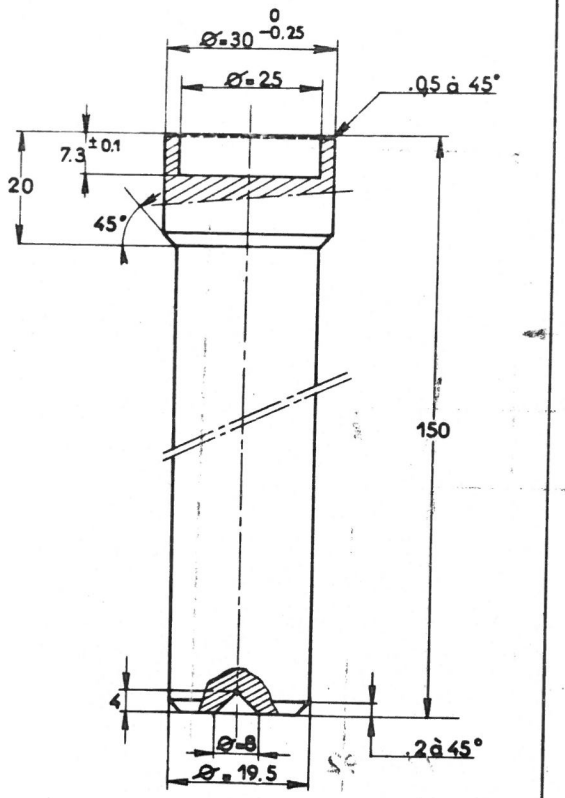

MR 630_34/55

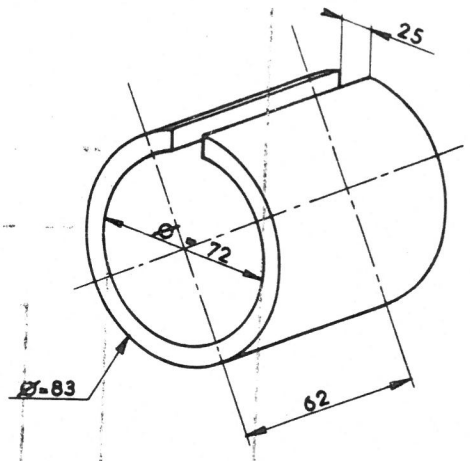

MR 630_34/56

